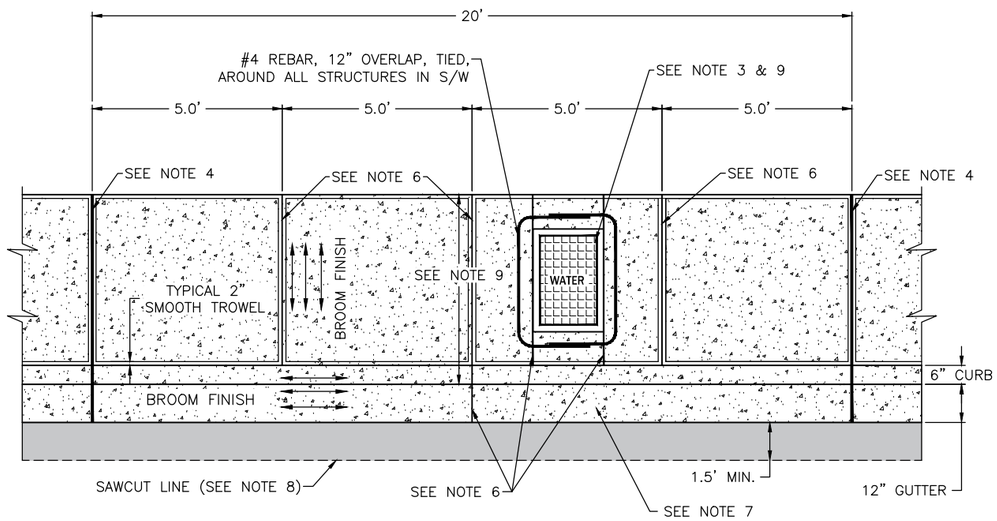

TYPICAL CONCRETE CURB, GUTTER & SIDEWALK

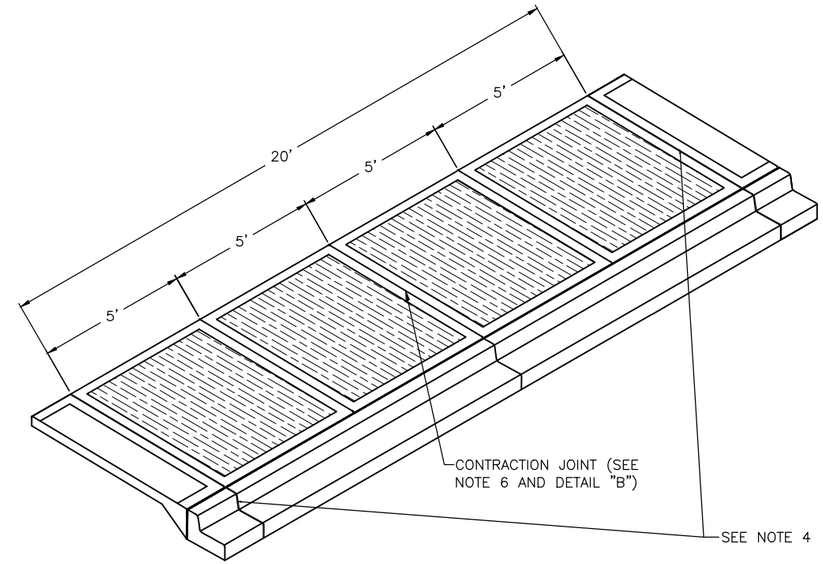

JOINT SPACING IN SIDEWALK
ADJACENT TO CURB AND GUTTER

JOINT SPACING

NOTES:

1. SIDEWALK SLAB DEPTH: 4".
2. DRIVEWAY SECTION DEPTH: 6".
3. WATER METER LIDS LOCATED IN DRIVEWAY APPROACHES SHALL BE BE "IFCO": No. 2019, No. 2020 WITH DROP HANDLES TO BE USED IN SIDEWALK AREAS.
4. THROUGH 3/8" EXPANSION JOINT IN BOTH CURB AND SIDEWALK, FULL DEPTH (SEE DETAIL A).
5. WATER METER LID SHALL BE PLACED NO CLOSER THAN 6" FROM THE BACK OF THE SIDEWALK.
6. 1/8" TO 1/4" CONSTRUCTION JOINTS IN SIDEWALK ONLY. (SEE DETAIL B). THE CONSTRUCTION JOINT FROM NOTE 5 MAY BE MOVED TO BE ON ONE SIDE OF THE WATER METER LID WITH PRIOR APPROVAL FROM THE CITY ENGINEERS OFFICE.
7. FOR CURB & GUTTER REPLACEMENT, ASPHALT PAVEMENT REMOVAL BY SAW CUTTING FOR FORMS PLACEMENT (OR EXTRUDER MACHINE) IS REQUIRED. THE WIDTH OF 18" MINIMUM TRANSVERSE SAW CUT IS BASED ON MULTIPLE COMPACTED LIFTS OF CRUSHED ROCK AND HOT MIX ASPHALT (H.M.A.) BY ITS ASSOCIATED COMPACTION EQUIPMENT, WIDER PAVEMENT REMOVAL MAY BE NECESSARY. SUBSEQUENT STREET PATCH TO MATCH EXISTING STREET SURFACING THICKNESS OR 3" H.M.A. WHICHEVER IS GREATER.
8. TACK COAT MUST BE PLACED ALONG THE CUT FACE OF THE REMAINING ASPHALT PRIOR TO PATCHING WITH H.M.A.
9. LID ADJUSTMENTS SHALL BE DONE USING BRICK OR CONCRETE.
10. SIDEWALK WIDTH (5'–0" MIN.) AS SPECIFIED ON DRAWINGS OR IN CONTRACT.
11. SEE DETAIL R–100B FOR SECTIONS.

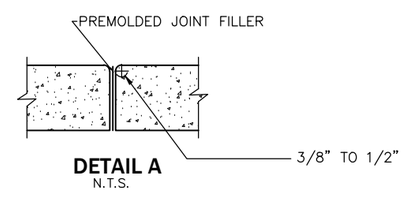

DETAIL A
N.T.S.

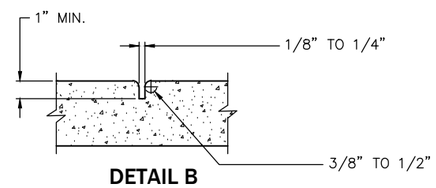

DETAIL B
N.T.S.

STANDARD DETAIL
CURB, GUTTER, AND SIDEWALK

City of Wenatchee

REVISIONS		
DATE	INITIAL	
06/16	RDH	
09/20	CAW	
01/22	AJS	

SCALE: AS SHOWN	DATE DRAWN 3/23/2015		
DESIGNED DMN	DRAWN RDH	CHECKED DMN	
APPROVED BY		DATE APPROVED	

STANDARD SPECIFICATIONS
8–04 CURBS & GUTTER
8–06 DRIVEWAY
8–14 SIDEWALK

DETAIL NO.
R–100A

PAGE
1 OF 2

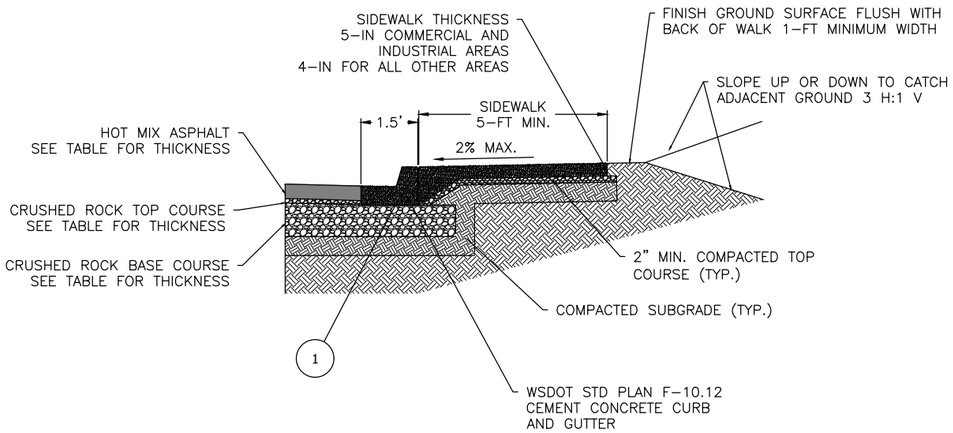

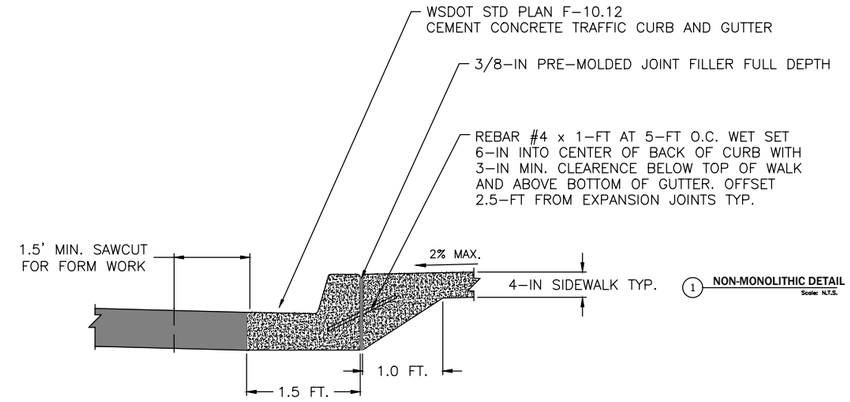

1 NON-MONOLITHIC DETAIL
Scale: N.T.S.

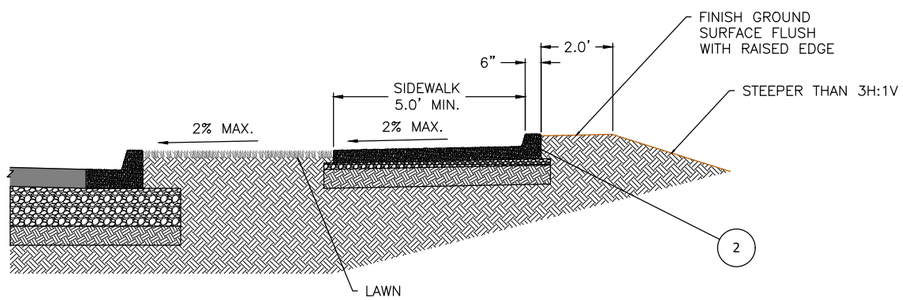

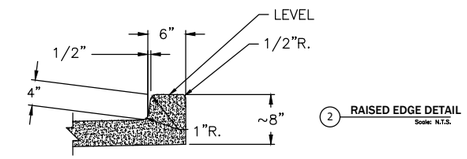

2 RAISED EDGE DETAIL
Scale: N.T.S.

EXTEND SIDEWALK TRANSVERSE
JOINTS TO INCLUDE RAISED EDGE

WSDOT F30–10 FOR
SLOPES STEEPER THAN 3:1

NOTE:
FOUR FEET OF THE SIDEWALK WIDTH SHALL BE THE MINIMUM PEDESTRIAN ACCESSIBLE ROUTE FREE OF VERTICAL AND HORIZONTAL OBSTRUCTIONS. GRATINGS, ACCESS COVERS, JUNCTION BOXES , CABLE VAULTS, PULL BOXES AND OTHER APPURTENANCES WITHIN THE SIDEWALK MUST HAVE SLIP RESISTANT SURFACES, BE FLUSH WITH SURFACE, AND MATCH GRADE OF THE SIDEWALK.

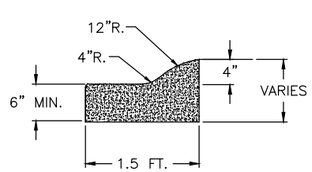

ROLLED CURB DETAIL

FOR USE AS ALLOWED
BY CITY ENGINEER

	LOCAL/PRIVATE LN	COLLECTOR	ARTERIAL	TRUCK ROUTE
HMA	3 INCHES	4 INCHES	4 INCHES	6 INCHES
TOP COURSE	3 INCHES	2 INCHES	2 INCHES	2 INCHES
BASE COURSE	9 INCHES	10 INCHES	10 INCHES	10 INCHES

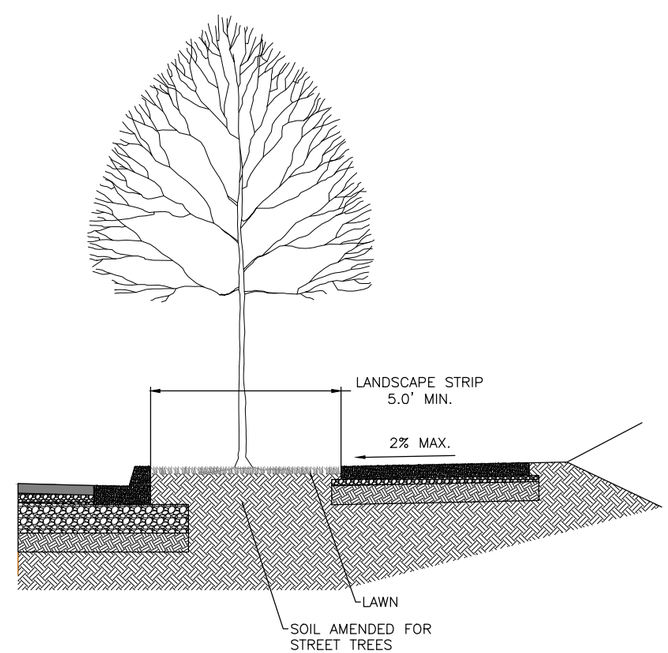

STANDARD DETAIL CURB, GUTTER, AND SIDEWALK

City of Wenatchee

REVISIONS		
DATE		INITIAL
06/16		RDH
09/20		CAW
09/21		CAW
01/22		AJS

SCALE: AS SHOWN
DATE DRAWN 3/23/2015
DESIGNED DMN
DRAWN RDH
CHECKED
APPROVED BY
DATE APPROVED

STANDARD SPECIFICATIONS
8–04 CURBS & GUTTER
8–06 DRIVEWAY
8–14 SIDEWALK

DETAIL NO.
R–100B

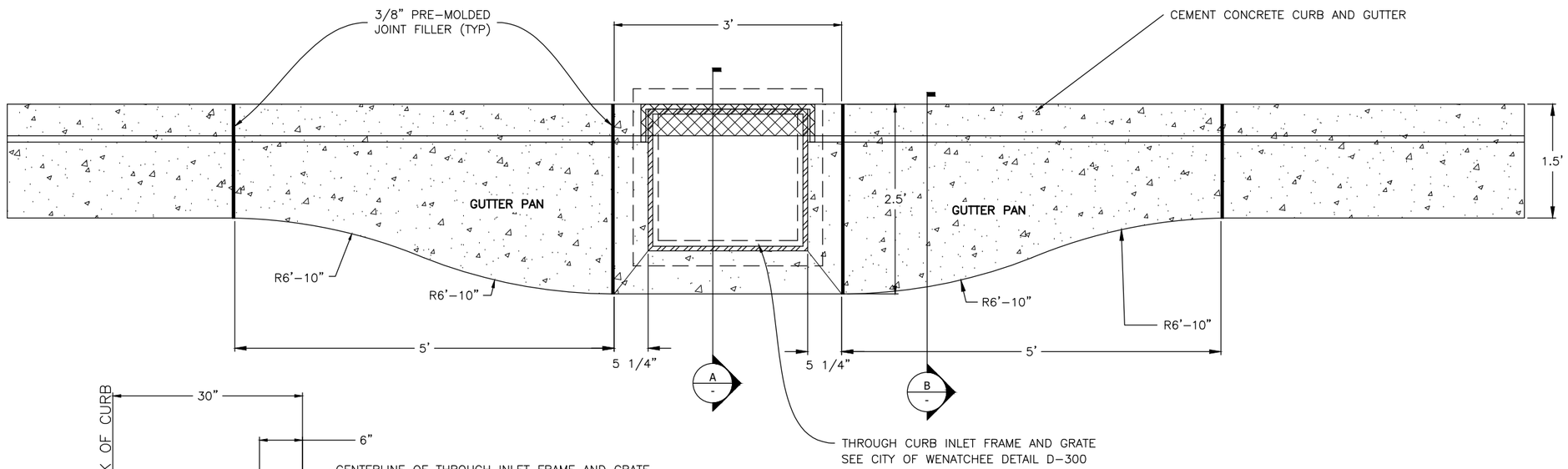

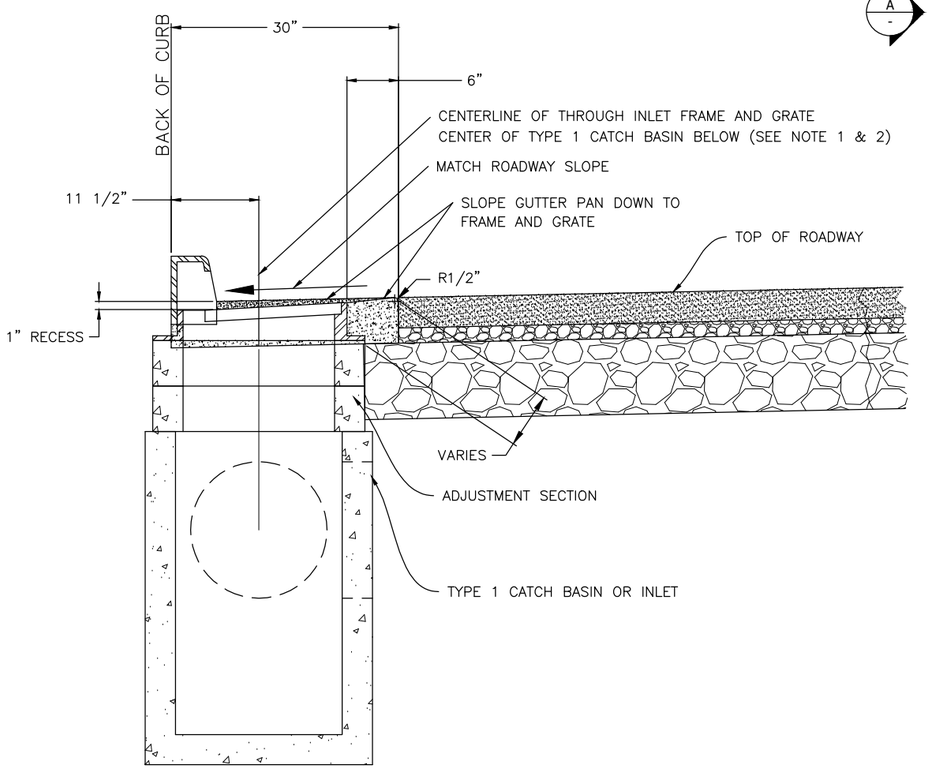

1 SECTION-A
N.T.S.

NOTES:

1. CATCH BASIN TYPE 1 PER WSDOT STANDARD PLAN B-5.40-00.
2. THE CENTER LINE OF THE DRAINAGE STRUCTURE MAY DIFFER FROM THE CENTERLINE OF THE FRAME AND GRATE.
3. CONCRETE: AIR ENTRAINED CLASS 3000

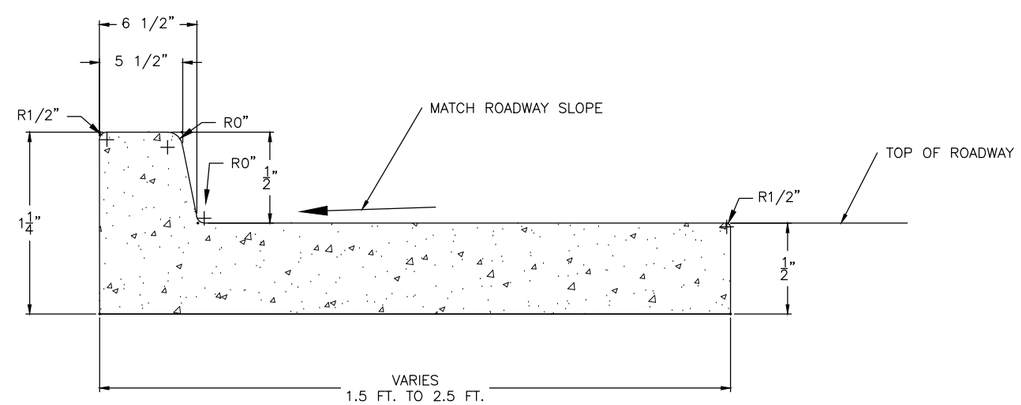

2 SECTION-B
N.T.S.

STANDARD DETAIL GUTTER PAN AT THROUGH CURB INLET

City of Wenatchee

REVISIONS		
DATE	INITIAL	
10/19/2012	DMN	
4/9/2015	RDH	
12/21/2020	CAW	
01/01/2022	AJS	

SCALE: AS SHOWN
DESIGNED DMN
DRAWN RDH
APPROVED BY
DATE DRAWN 5/31/2011
CHECKED
DATE APPROVED
STANDARD SPECIFICATIONS
8-04 CURBS, GUTTERS, AND SPILLWAYS

DETAIL NO.
R-110

PAGE
1 OF 1

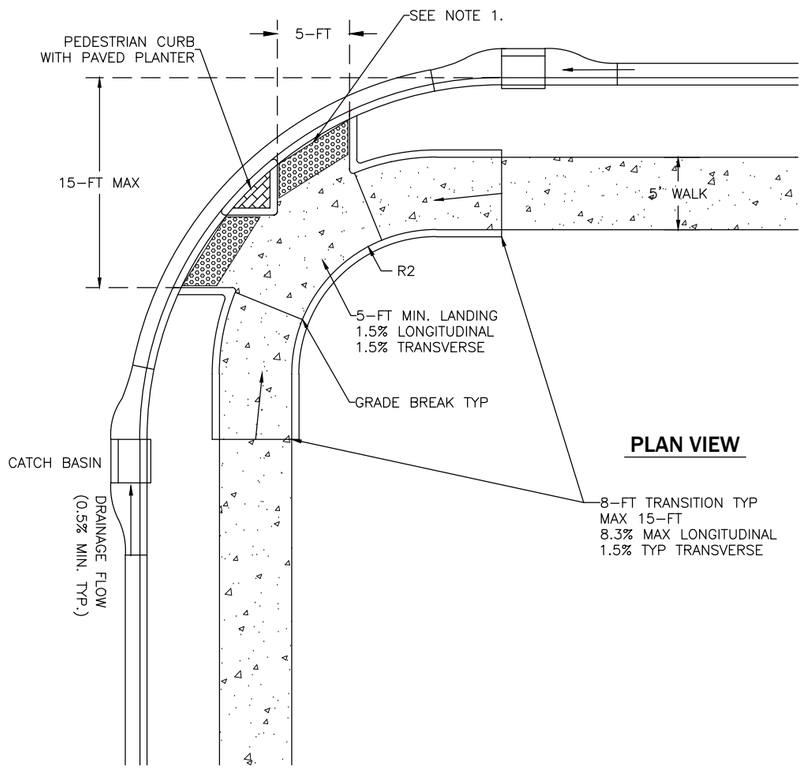

BI-DIRECTIONAL CURB RAMPS

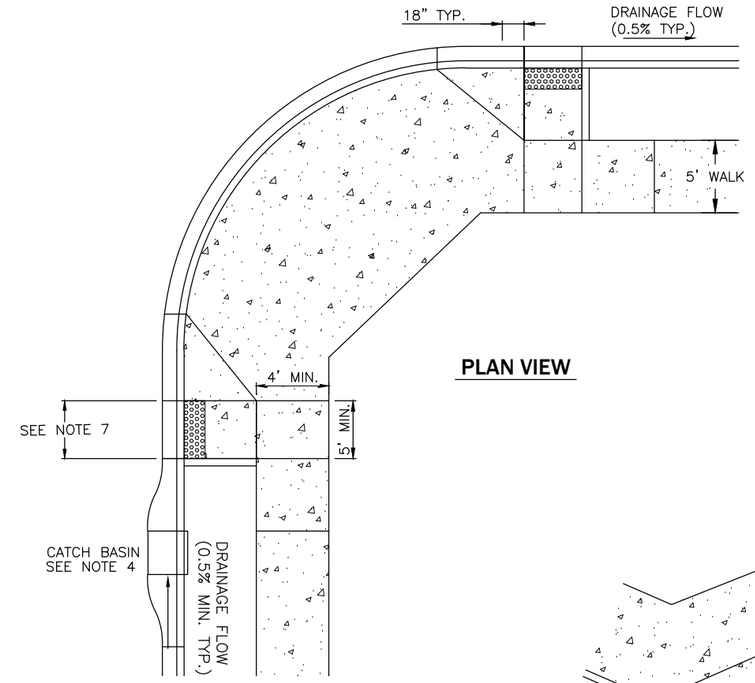

PERPENDICULAR CURB RAMPS

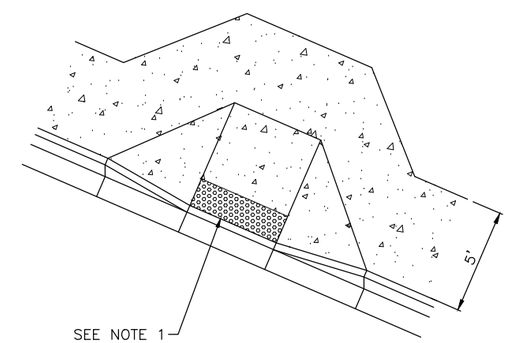

NOTES:

1. DETECTABLE WARNING SURFACE PER WSDOT STD. PLAN F-45.10
2. RAMP AND APPROACHES SHALL BE CLEAR OF OBSTACLES INCLUDING HYDRANTS, POLES, AND INLETS.
3. RAMP CENTER LINE SHALL BE PERPENDICULAR TO THE RADIAL TO CURB RETURNS UNLESS OTHERWISE APPROVED BY ENGINEER.
4. CATCH BASINS SHALL BE PLACED UPSTREAM FROM PEDESTRIAN RAMPS, AS REQUIRED BY PROJECT DRAINAGE PLANS.
5. CURB SLOPE SHOULD NOT EXCEED 2% ACROSS RAMP. MAY BE INCREASED TO 5% AT NON-STOP CONTROLLED INTERACTIONS.
6. RAMP TO BE 4' WIDE WHEN CORNER LANDING IS PAVED OR 5' WIDE WHEN CORNER LANDING IS LANDSCAPED.

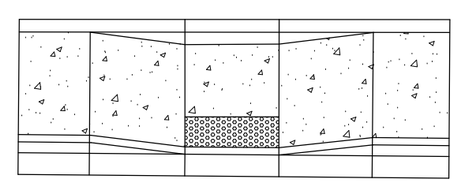

PARALLEL CURB RAMPS

STANDARD DETAIL DIRECTIONAL CURB RAMPS

City of Wenatchee

REVISIONS	
DATE	INITIAL

SCALE: AS SHOWN	DATE DRAWN 01/28/21		
DESIGNED	DRAWN CAW	CHECKED	DATE APPROVED
APPROVED BY		STANDARD SPECIFICATIONS	

DETAIL NO.
R-120

PAGE
1 OF 1

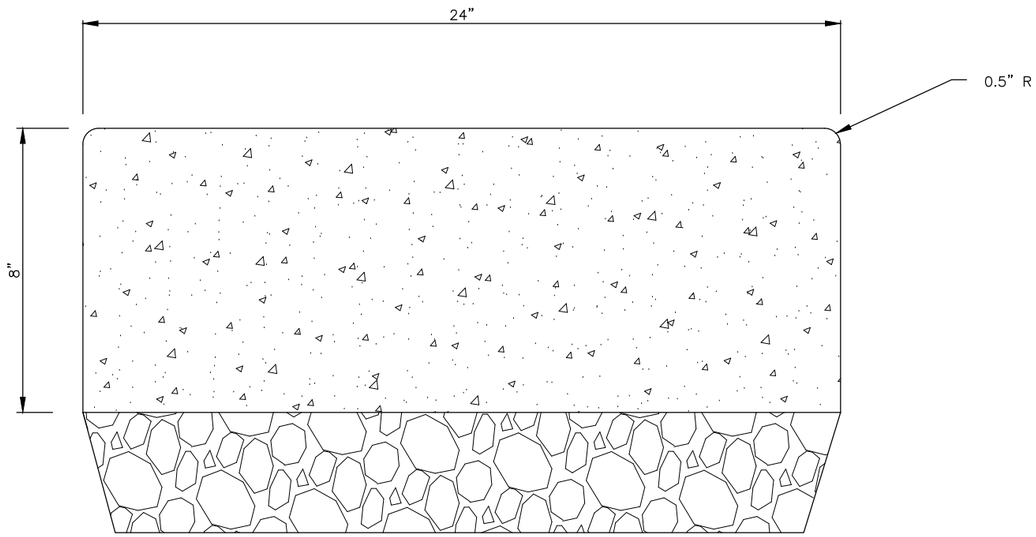

FLAT CURB

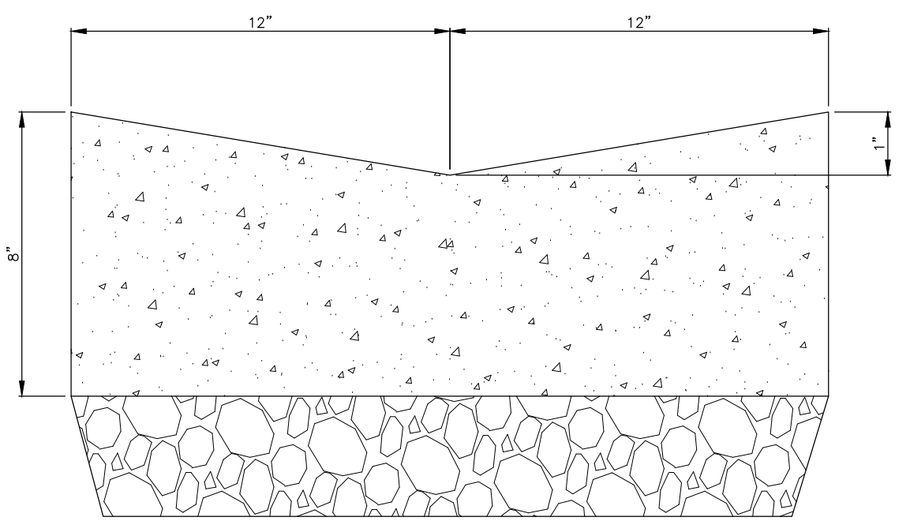

VALLEY GUTTER

NOTES:

1. THIS DETAIL IS FOR SPECIAL USE ONLY WITH APPROVAL FROM PUBLIC WORKS INSPECTOR OR ENGINEER.
2. FORMS SHALL BE STEEL AND SET TRUE TO LINE AND GRADE (INSPECTION IS REQUIRED PRIOR TO PLACEMENT OF CONCRETE).
3. BASE COURSE SHALL BE 4" COMPACTED DEPTH CRUSHED SURFACING TOP COURSE.
4. CONCRETE SHALL BE CEMENT CONCRETE CLASS 4000.
5. FOR CURB EXPANSION 10' OC TYPICAL.
6. BROOM FINISH ONLY.

STANDARD DETAIL FLAT CURB AND VALLEY GUTTER

City of Wenatchee

REVISIONS	
DATE	INITIAL
01/01/2022	AJS

SCALE: AS SHOWN
DATE DRAWN 10/02/2020
DESIGNED
DRAWN CAW
CHECKED
APPROVED BY
DATE APPROVED
STANDARD SPECIFICATIONS

DETAIL NO.
R-130

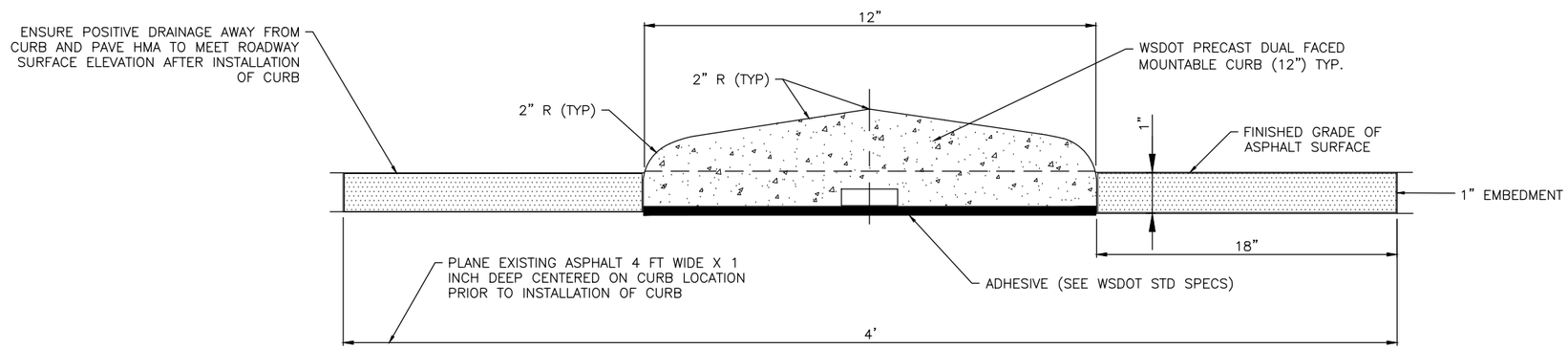

MOUNTABLE MEDIAN CURB

N.T.S.

NOTES:

1. ALL JOINTS BETWEEN ASPHALT PATCH AND EXISTING PAVEMENT SHALL BE SEALED.

STANDARD DETAIL MOUNTABLE MEDIAN CLUB

City of Wenatchee

REVISIONS	
DATE	INITIAL
01/01/2022	AJS

SCALE: AS SHOWN	DATE DRAWN 10/02/2020
DESIGNED	DRAWN CAW
APPROVED BY	CHECKED
	DATE APPROVED

STANDARD SPECIFICATIONS
9.26.2 EPOXY ADHESIVE FOR LANE MARKERS
9.34.2 PAINT

DETAIL NO.
R-140

PAGE
1 OF 1

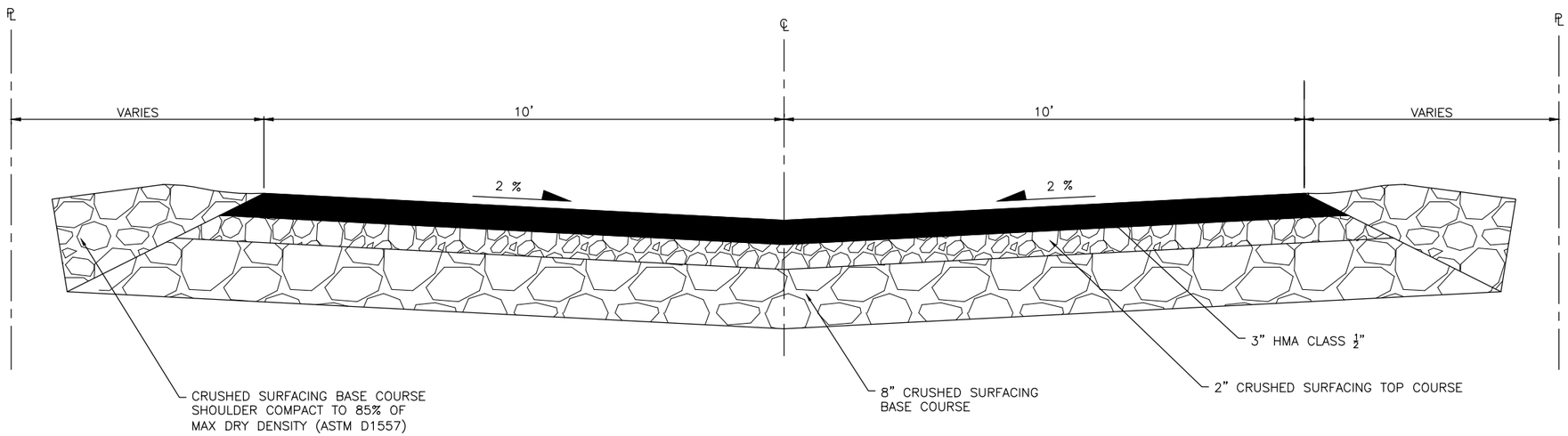

NOTES:

1. ALL EXISTING ALLEYS SHALL HAVE A MINIMUM PAVEMENT WIDTH OF 12 FEET UNLESS APPROVED BY THE PUBLIC WORKS DEPARTMENT.
2. NEW ALLEYS SHALL HAVE A MINIMUM PAVEMENT WIDTH OF 20 FT.
3. INVERT DRAINAGE TO BE COLLECTED AT LOW END OF IMPROVED SECTION WITH CATCH BASIN INSTALLATION AND TIGHTLINED TO STORM DRAIN SYSTEM.
4. COMPACTION TESTS ON SUBGRADE AND ROCK GRADE SHALL BE REQUIRED. THE NUMBER OF TESTS SHALL BE AT THE DISCRETION OF THE CITY INSPECTOR. ALL TESTS, AS REQUIRED, SHALL BE AT THE EXPENSE OF THE CONTRACTOR OR DEVELOPER THROUGH ANY LICENSED TESTING LAB OF THEIR CHOICE. THE MINIMUM COMPACTION SHALL BE 95 % OF MAXIMUM DRY DENSITY (PER ASTM D1557) ON BOTH SUBGRADE AND ROCK SURFACES.
5. ADJUSTMENT OF CATCH BASIN LIDS OR GRATES, MANHOLE LIDS, MONUMENT CASES, VALVE BOXES, ETC., SHALL BE THE RESPONSIBILITY OF THE CONTRACTOR OR DEVELOPER AS REQUIRED AND SHALL BE ADJUSTED AFTER THE FINAL LIFT OF ASPHALT HAS BEEN PLACED.

STANDARD DETAIL
STANDARD ALLEY
CROSS-SECTION

City of Wenatchee

REVISIONS	
DATE	INITIAL
9/2/2021	CAW

SCALE: AS SHOWN
DATE DRAWN 10/01/2020
DESIGNED
DRAWN CAW
CHECKED
APPROVED BY
DATE APPROVED
STANDARD SPECIFICATIONS

DETAIL NO.
R-150

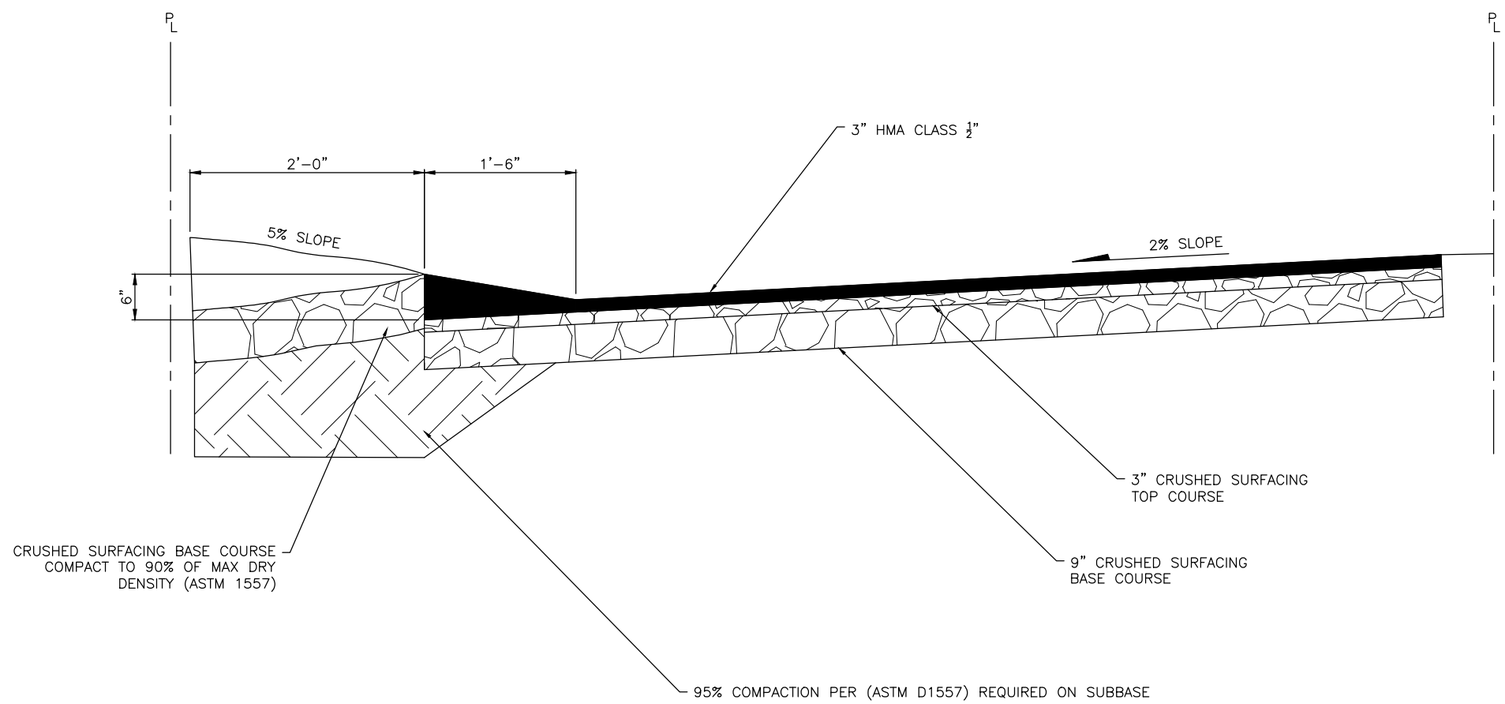

NOTES:

1. MAY BE USED FOR SPECIAL APPLICATIONS IN ALLEYS AS DETERMINED BY THE CITY ENGINEER.

STANDARD DETAIL
THICKENED EDGE
PRIVATE ROADWAY

City of Wenatchee

REVISIONS	
DATE	INITIAL
9/2/2021	CAW

SCALE: AS SHOWN
DESIGNED
DRAWN CAW
APPROVED BY
DATE DRAWN 10/02/2020
CHECKED
DATE APPROVED
STANDARD SPECIFICATIONS

DETAIL NO.
R-160

PAGE
1 OF 1

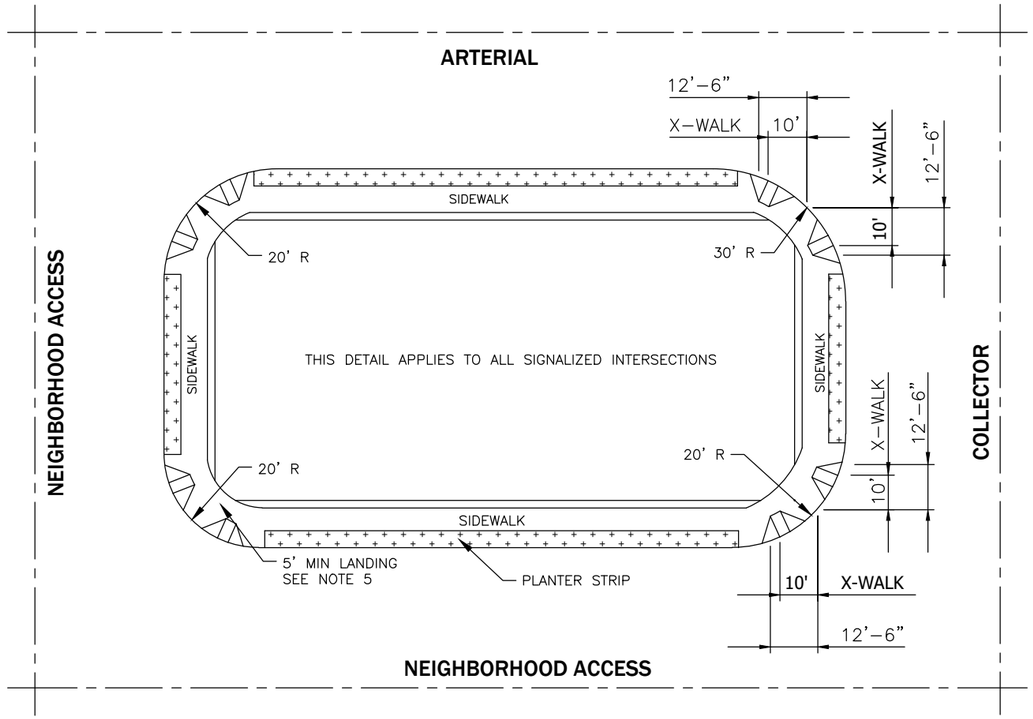

CURB RADIUS AT INTERSECTIONS

	ARTERIAL	COLLECTOR	NEIGHBORHOOD ACCESS
ARTERIAL	25'	25'	20'
COLLECTOR	25'	20'	20'
NEIGHBORHOOD ACCESS	20'	20'	20'

NOTES:

1. THE CITY OF WENATCHEE EVALUATES CURB RADII BASED ON THE TYPE AND VOLUME OF ACTIVITY AT THE INTERSECTION. IN ALL CASES, THE CITY WILL EVALUATE THE CURB RADII BASED ON A SINGLE UNIT (SU) VEHICLE WITH A 42 FOOT TURNING RADIUS. AN APPLICANT MAY PROPOSE TIGHTER CURB RADII, AND WILL NEED TO PROVIDE SUPPORTING DOCUMENTATION AND HAVE THE REQUEST APPROVED BY THE CITY ENGINEER.
2. STORM DRAINAGE INLETS SHALL BE OUTSIDE THE CURB RAMP.
3. THE CURB RAMP MAY BE MOVED AWAY FROM THE CROSSWALK TO AVOID CONFLICTS WITH HYDRANTS, POLES, INLETS, OR OTHER UTILITIES. EXCEPT WHERE THE STREET GRADE EXCEEDS 4%.
4. FOR SWEEPING EFFICIENCY, WHEN CURB BULBS (PARKING SETBACKS) ARE USED, REVERSE CURVE RADIUS SHALL NOT BE LESS THAN 20 FEET. REFER TO DETAIL A.
5. FOR STAKING PURPOSES, RAMPS MAY BE LOCATED PER QUARTER DELTA AND PUBLIC WORKS APPROVAL.
6. REFER TO WSDOT STANDARDS.

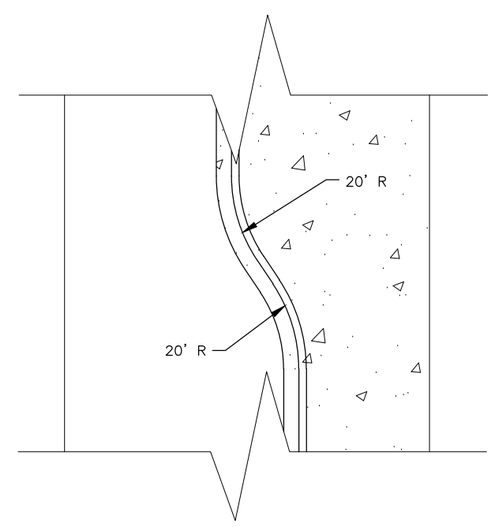

DETAIL A – MINIMUM RADIUS FOR CURB BULB/PARKING SETBACK

STANDARD DETAIL STANDARDS & CURB RAMP LOCATIONS

City of Wenatchee

REVISIONS	
DATE	INITIAL
01/01/2022	AJS

SCALE: AS SHOWN	DATE DRAWN 10/05/2020		
DESIGNED	DRAWN CAW	CHECKED	DATE APPROVED
APPROVED BY		STANDARD SPECIFICATIONS	

DETAIL NO.
R–170

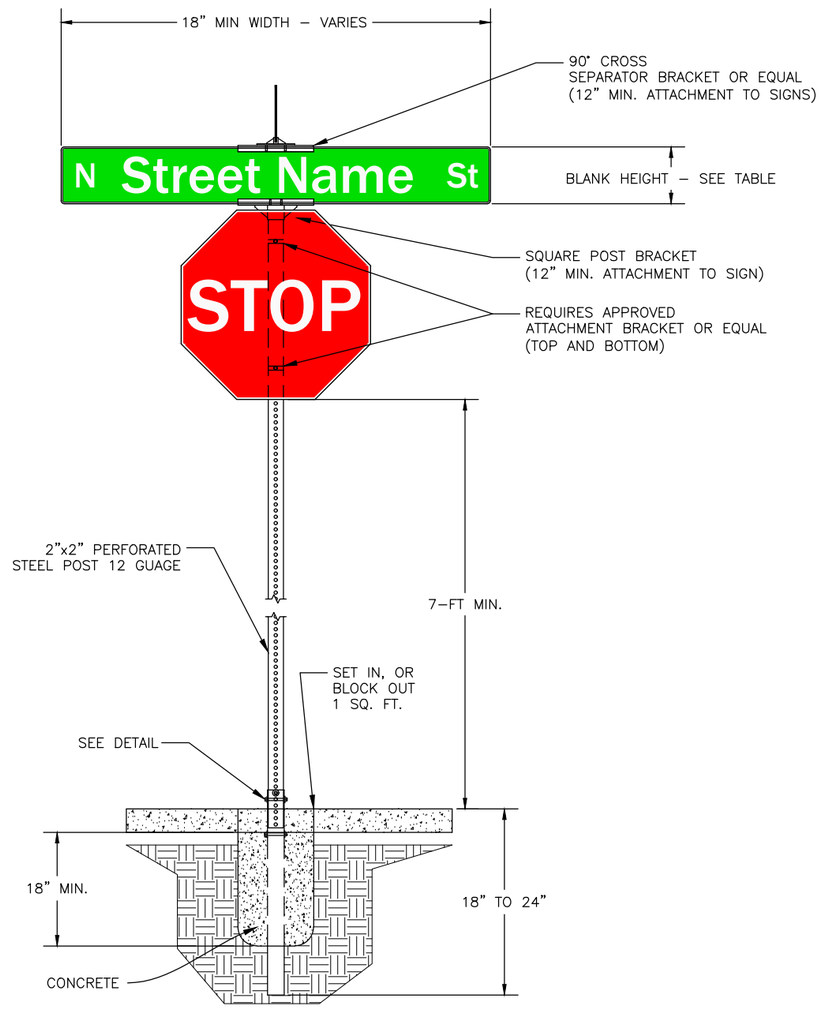

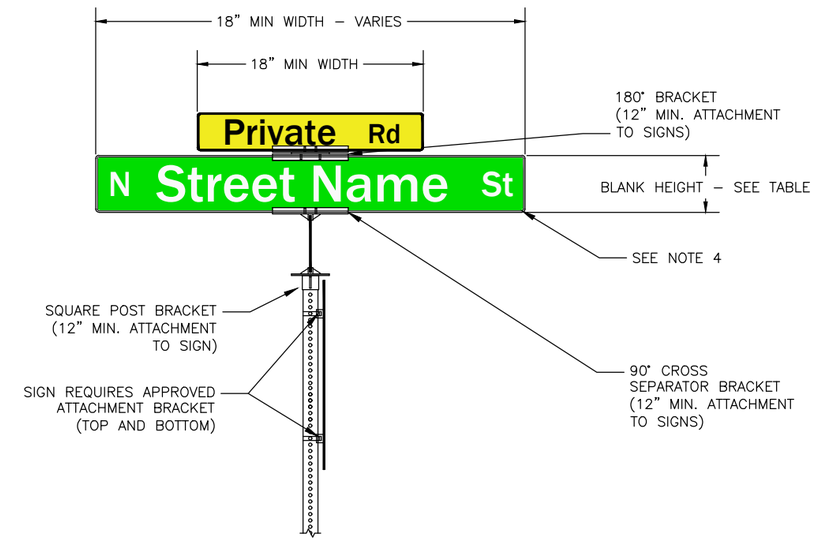

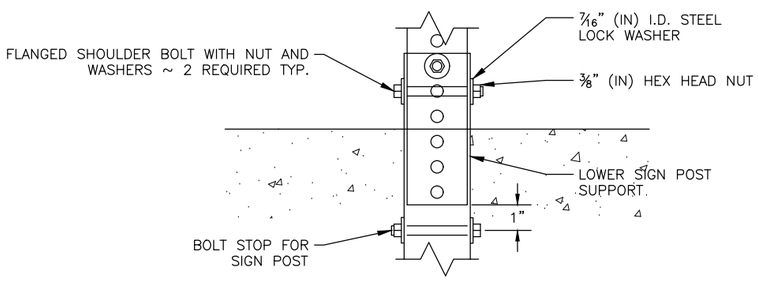

BASE DETAIL

NOTES:

1. STOP SIGNS SHALL BE MUTCD R1–1. SIZES SHALL BE 30 X 30 MIN FOR SINGLE LANE ROADS, AND 36 X 36 FOR MULTI–LANE ROADS.
2. THE LETTERING FOR NAMES OF STREETS ON STREET NAME SIGNS SHALL BE COMPOSED OF A COMBINATION OF LOWER–CASE LETTERS WITH INITIAL UPPER–CASE LETTERS; IN COMPLIANCE WITH MUTCD 2009 EDITION AS DIRECTED BY THE WASHINGTON AMENDED CODE 486–95. THE BACKGROUND SHALL BE GREEN AND THE LEGEND AND BORDER SHALL BE WHITE. SEE THE TABLE BELOW FOR MINIMUM LETTERING HEIGHTS.
3. SUPPLEMENTARY LETTERING TO INDICATE THE TYPE OF STREET (SUCH AS STREET, AVENUE, OR ROAD) OR THE SECTION OF THE CITY (SUCH AS N OR S) ON THE STREET NAME SIGN SHALL BE IN SMALLER LETTERING, COMPOSED OF INITIAL UPPER–CASE LETTERS AT LEAST 3 INCHES IN HEIGHT AND LOWER–CASE LETTERS AT LEAST 2.25 INCHES IN HEIGHT. CONVENTIONAL ABBREVIATIONS MAY BE USED EXCEPT FOR THE STREET NAME ITSELF.
4. THE ORIENTATION OF THE STREET NAME SIGN SHALL BE PARALLEL WITH THE STREET THAT IT NAMES.
5. THE MINIMUM INSTALLATION HEIGHT OF A POST–MOUNTED STREET NAME SIGN SHALL BE 9.5–FEET, IF NO STOP SIGN IS INSTALLED.
6. USE HIGHER CLASSIFICATION OF ROAD AT INTERSECTIONS
7. 0.125" SHEET ALUMINUM FOR PERMANENT SIGNS. TYPE III OR IV REFLECTIVE SHEETING FOR BACKGROUND OF SIGNS.
8. CORNER RADII OF 1 ½ INCHES.
9. SEE CITY STANDARD R11 FOR SIGN PLACEMENT DETAILS.
10. THE PRIVATE ROAD SIGN SHALL BE SIMILAR TO MUTCD W16–8P 2009 EDITION (ADVANCE STREET NAME PLAQUE WITHOUT ARROW AND ON YELLOW BACKGROUND WITH BLACK LEGEND AND BORDER TRIM.)
11. THE LETTERING HEIGHT FOR A PRIVATE ROAD SIGN SHALL BE 4 INCHES INITIAL UPPER–CASE AND 3–INCHES LOWER–CASE. THE ABRIVIATION "RD" FOR ROAD SHALL BE USED.
12. IF ROW PERMITS SIGN POST INSTALLATION BEHIND SIDEWALK, 12"–18" FROM BACK OF WALK PREFERRED.

MINIMUM LETTER HEIGHTS ON STREET NAME SIGNS (SEE NOTE 3)

TYPE OF MOUNTING	TYPE OF STREET	SPEED LIMIT	LETTER HEIGHT		SUPPLEMENTAL	BLANK HEIGHT	BORDER
			INITIAL UPPER–CASE	LOWER–CASE			
OVERHEAD	ALL TYPES	ALL SPEED LIMITS	12 INCHES	9 INCHES	APPLE LOGO	18 INCHES	1½ INCHES
POST MOUNTED	ALL TYPES	ALL SPEED LIMITS	6 INCHES	4.5 INCHES	3–2.25 INCHES	9 INCHES	½ INCH

STANDARD DETAIL STOP AND STREET NAME SIGNS

City of Wenatchee

REVISIONS	DATE	INITIAL
	09/21	CAW
	01/01/2022	AJS

DATE DRAWN 10/18/2012
CHECKED
DATE APPROVED
SCALE: AS SHOWN
DRAWN DMN
DESIGNED DMN
APPROVED BY
STANDARD SPECIFICATIONS
9–08 PAINT AND RELATED MATERIALS
9–28 SIGNING MATERIALS AND FABRICATIONS

DETAIL NO.
R–200

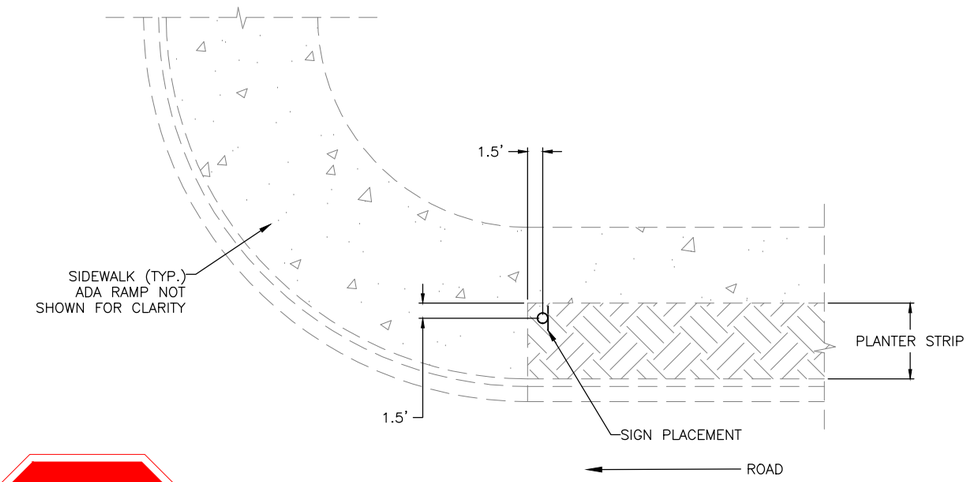

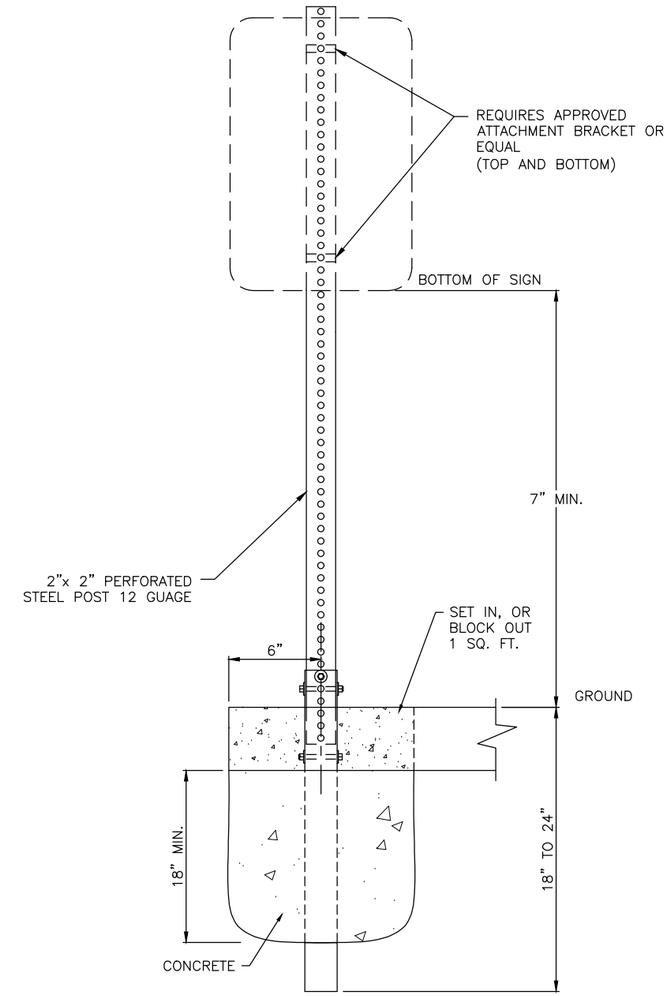

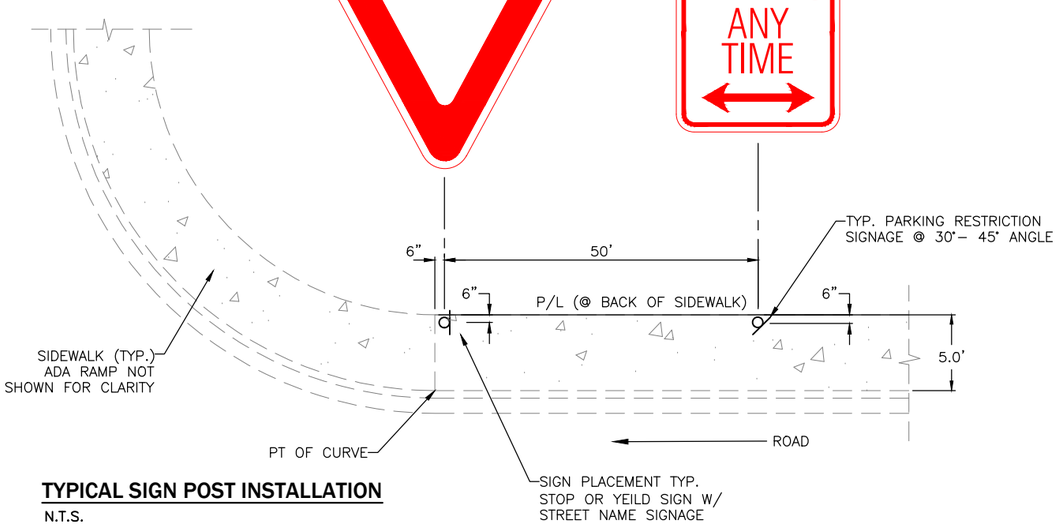

TYPICAL SIGN POST INSTALLATION

N.T.S.

R7 - 1

NOTES:

1. SEE R–200 FOR DETAILS ON BASE.
2. IF ROW PERMITS SIGN POST INSTALLATION BEHIND SIDEEWALK, 12"–18" FROM BACK OF WALK PREFERRED.
3. NO PARKING SIGN MAY USE "HERE TO CORNER" IN PLACE OF "ANY TIME" OR AS SPECIFIED BY THE CITY.

STANDARD DETAIL SIGN PLACEMENT NEAR SIDEWALKS

City of Wenatchee

REVISIONS		
DATE	INITIAL	
09/21	CAW	
01/12/2022	AJS	

SCALE: AS SHOWN

DATE DRAWN | DRAWN | CHECKED | DATE APPROVED | DESIGNED | APPROVED BY

STANDARD SPECIFICATIONS

DETAIL NO.

R–210

PAGE

1 of 1

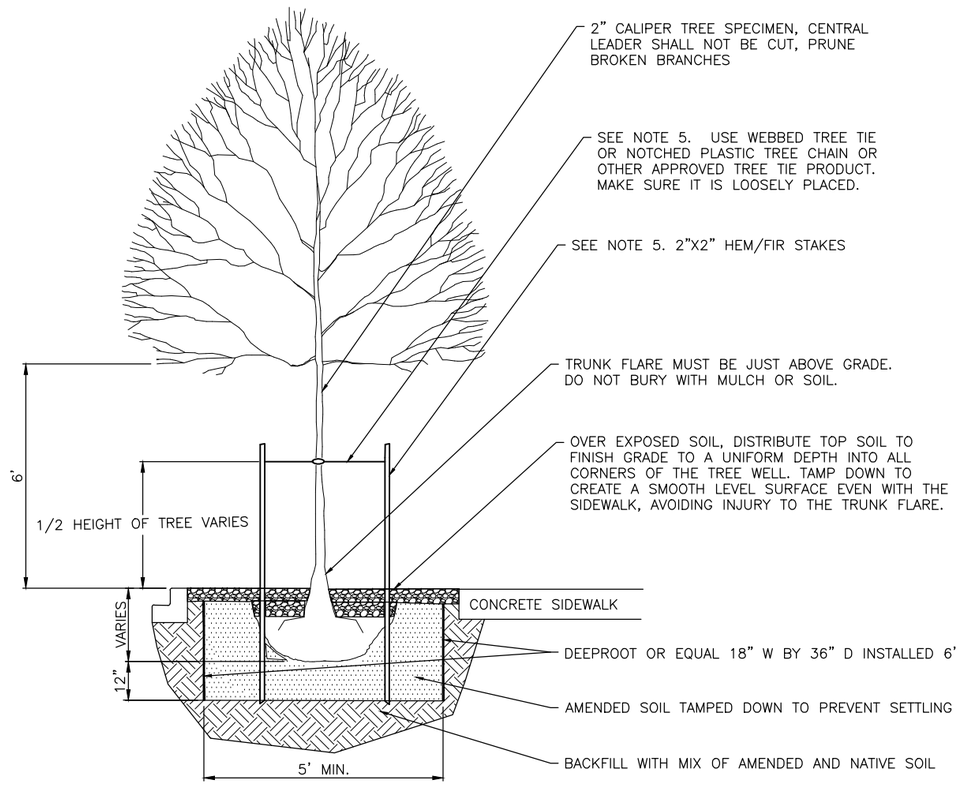

TREE WELL

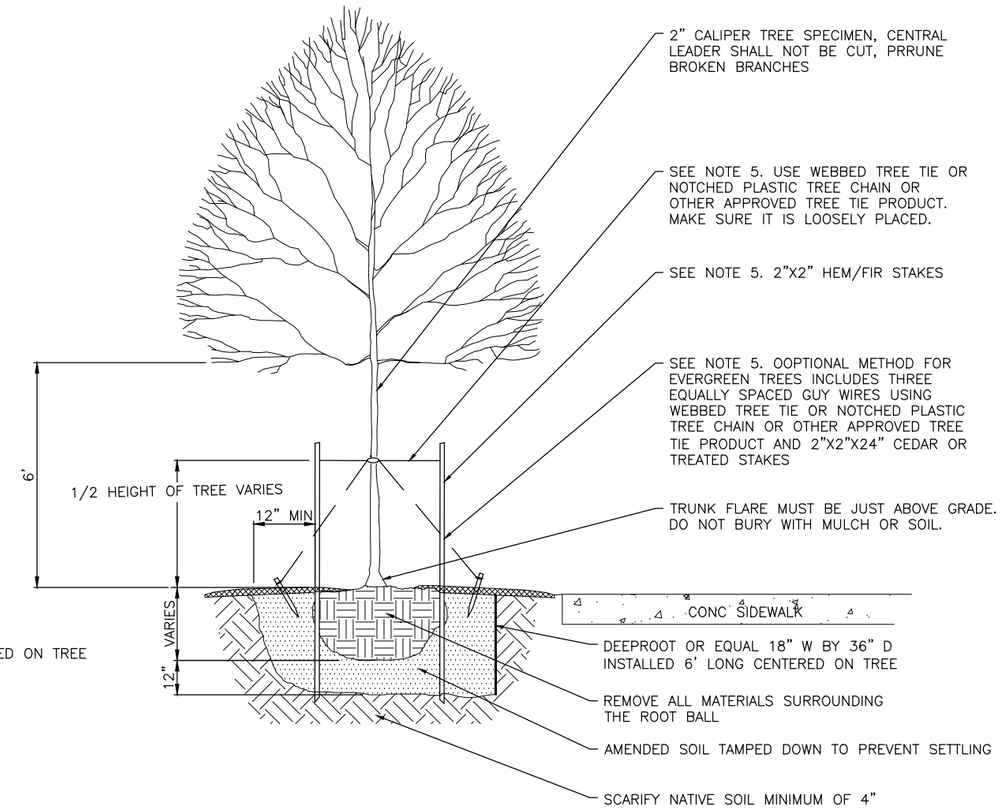

TREE PLANTING BACK OF WALK

NOTES:

1. SIZE OF PLANTING PIT SHALL BE 3 TIMES LARGER THEN ROOT BALL.
2. FOR DECIDUOUS TREES, 2" CALIPER MINIMUM AND BRANCHING STARTS 5' ABOVE GRADE (UNLESS OTHER APPROVED BY CITY).
3. FOR PLANTING DISTANCES NEAR INTERSECTIONS AND DRIVEWAYS. REFER TO SIGHT DISTANCE STANDARDS.
4. TREES SHALL NOT BE PLANTED WITHIN 10' OF ANY UG UTILITY ACCESS, WHICH MAY BE LOCATED IN THE PLANTER STRIP OR ADJACENT SIDEWALK.
5. REMOVE ALL MATERIALS SURROUNDING THE ROOT BALL.
6. STAKE IF REQUIRED BY THE CITY AND INCLUDE TIMELINE FOR REMOVAL OF STAKES AND TIES.
7. ROOT BARRIER TO BE DEEPROOT (ORE APPROVED EQUAL) 18" WIDTH BY 36" DEPTH BY 6' LONG TOTAL INSTALLED ON BOTH CURB AND SIDEWALK SIDE.
8. NO EVERGREEN TREES IN PUBLIC RIGHT OF WAY.

STANDARD DETAIL
TREE WELL

City of Wenatchee

REVISIONS	
DATE	INITIAL
01/01/2022	AJS

SCALE: AS SHOWN	DATE DRAWN 10/20/2020		
DESIGNED	DRAWN CAW	CHECKED	DATE APPROVED
APPROVED BY	STANDARD SPECIFICATIONS		

DETAIL NO.
R-250

NOTES:

1. STRUCTURES INCLUDE STORM DRAIN MANHOLES, CATCH BASINS, AND SANITARY SEWER MANHOLES.
2. REQUIREMENTS APPLY TO VALVE CANS AS SHOWN.
3. CLEARANCE SHALL BE LARGE ENOUGH TO USE A MECHANICAL COMPACTOR.
4. REFER TO CITY DETAIL R8 FOR UTILITY ADJUSTMENTS.
5. BACKFILL SHALL BE COMPACTED IN A MAXIMUM OF 6 INCH LIFTS.

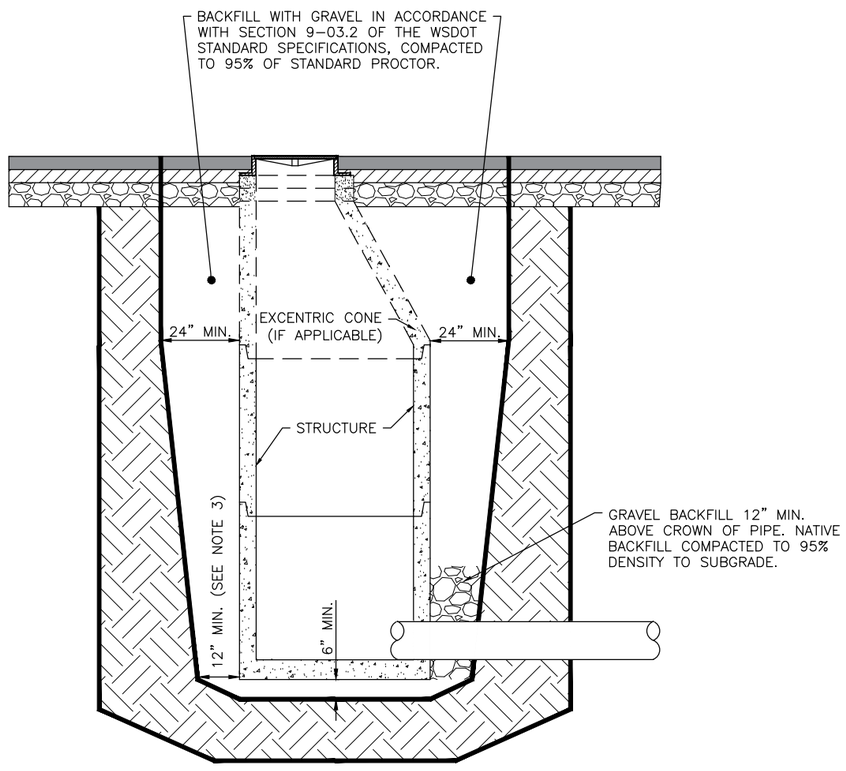

COMPACTION REQUIREMENTS FOR STORM DRAIN AND SANITARY SEWER STRUCTURES

N.T.S.

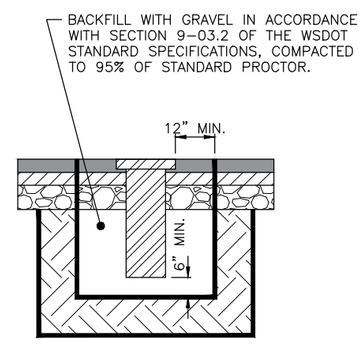

VALVE CAN DETAIL

N.T.S.

STANDARD DETAIL
STRUCTURE COMPACTION REQUIREMENTS

City of Wenatchee

REVISIONS		
DATE	INITIAL	
10/26/2020	CAW	
01/01/2022	AJS	

SCALE: AS SHOWN	DATE DRAWN 02/21/2006	
DESIGNED JB	DRAWN RLK	CHECKED JB
APPROVED BY		DATE APPROVED

STANDARD SPECIFICATIONS

DETAIL NO.
R-300

PAGE
1 OF 1

TRENCH REPAIR CONSTRUCTION NOTES

1. HOT MIX ASPHALT SHALL BE PLACED IN TWO OR MORE LIFTS TO A MINIMUM TOTAL COMPACTED DEPTH OF FOUR INCHES OR MATCH THE EXISTING ASPHALT DEPTH. PORTLAND CEMENT CONCRETE STREETS SHALL BE PLACED TO A MINIMUM DEPTH OF SIX INCHES OF CLASS 3000 COMMERCIAL GRADE CONCRETE OR MATCH EXISTING DEPTH, WHICHEVER IS GREATER.
2. IF PORTLAND CEMENT CONCRETE IS ENCOUNTERED UNDER EXISTING ASPHALT: THE CONTRACTOR SHALL REPLACE WITH SIX INCHES OF CLASS 3000 COMMERCIAL GRADE CONCRETE OR MATCH THE DEPTH OF THE EXISTING CONCRETE, WHICHEVER IS GREATER.
3. SHOULD THE NUMBER OF CROSS TRENCHES (THOSE PERPENDICULAR TO THE DIRECTION OF THE ROADWAY) REPRESENT MORE THAN ONE TRENCH PER 75 FEET OF THE STREET OF A GIVEN BLOCK AND THE TOTAL NUMBER OF TRENCHES EXCEEDS EIGHT, THE PERMITEE SHALL BE REQUIRED TO OVERLAY THE EXISTING ROADWAY SURFACE IF THE ROADWAY IS LESS THAN FIVE YEARS OLD. THE OVERLAY DEPTH SHALL BE SPECIFIED BY THE CITY ENGINEER.
4. IN THOSE CASES WHERE THE TRENCH IS GENERALLY RUNNING PARALLEL TO THE ROADWAY AND THE DISTANCE FROM THE EDGE OF THE ROADWAY IS LESS THAN FOUR FEET, THE CONTRACTOR SHALL REMOVE THE ROADWAY TO THE OUTER EDGE OF THE ROADWAY TO THE OUTER EDGE OF THE ROADWAY AND PAVE THIS AREA.
5. ALL PAVEMENT CUTS SHALL BE MADE WITH A SAW AND AFTER PLACEMENT OF TOP ROCK THE ROADWAY SHALL BE RE-CUT A DISTANCE OF EIGHT INCHES, OR GREATER AS DIRECTED BY THE CITY ENGINEER.
6. COMPACTED CRUSHED SURFACING BASE COURSE SHALL BE USED FOR BACKFILL IN ALL TRANSVERSE CROSSING TRENCHES.
7. TOP SEAL USE PG 64.22 AND PROVIDE A SAND BLANKET

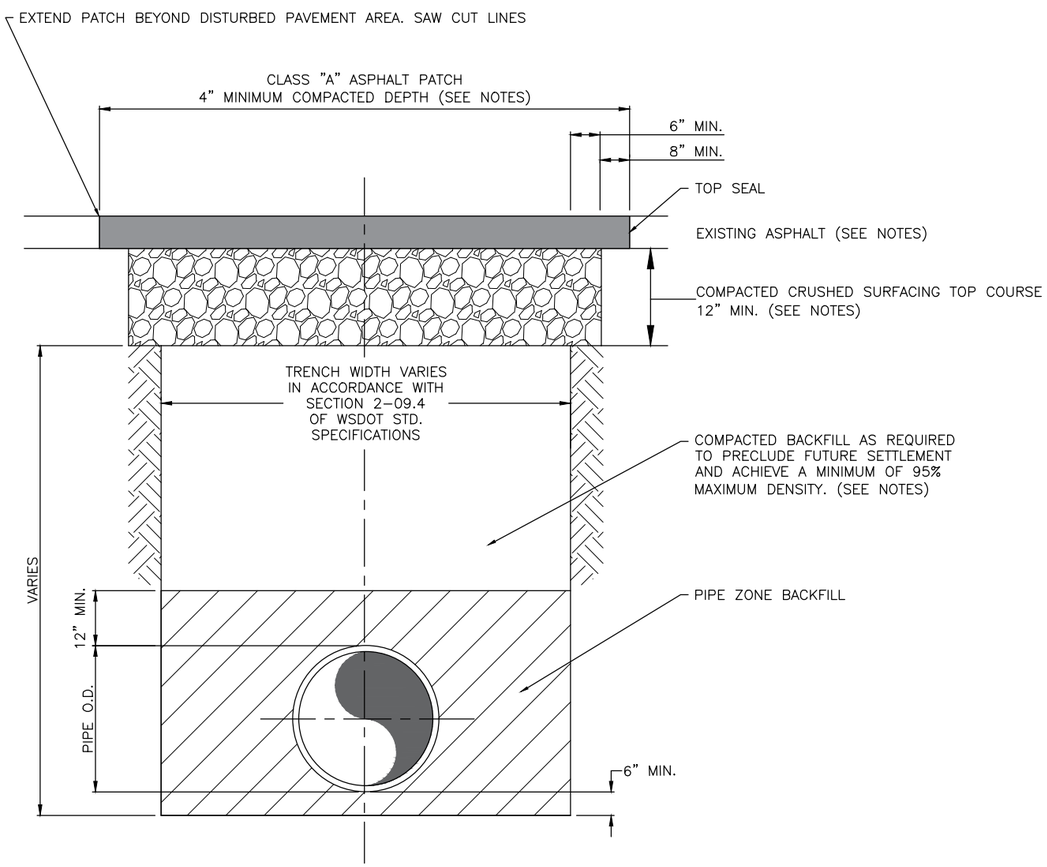

TRENCH REPAIR AND COMPACTION

City of Wenatchee

REVISIONS		
DATE	INITIAL	
09/21	JB	
01/01/2022	CAW	
	AJS	

SCALE: AS SHOWN
DESIGNED
DRAWN RLK
APPROVED BY
DATE DRAWN 02/06
CHECKED SK
DATE APPROVED
STANDARD SPECIFICATIONS

DETAIL NO.
R-305

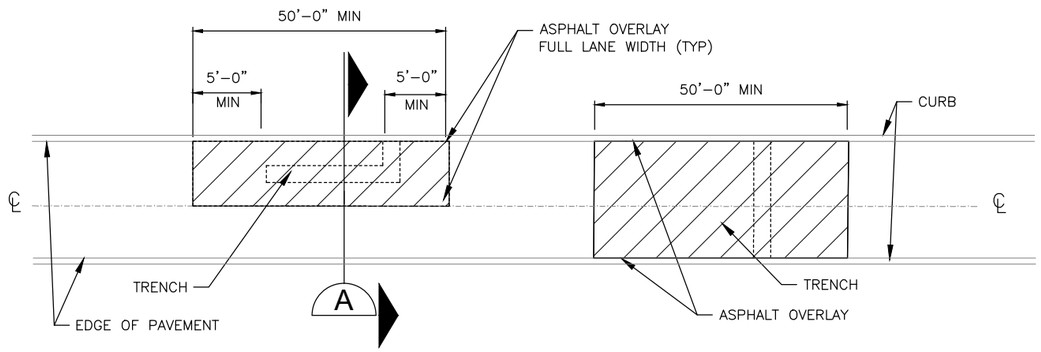

PLAN VIEW
N.T.S.

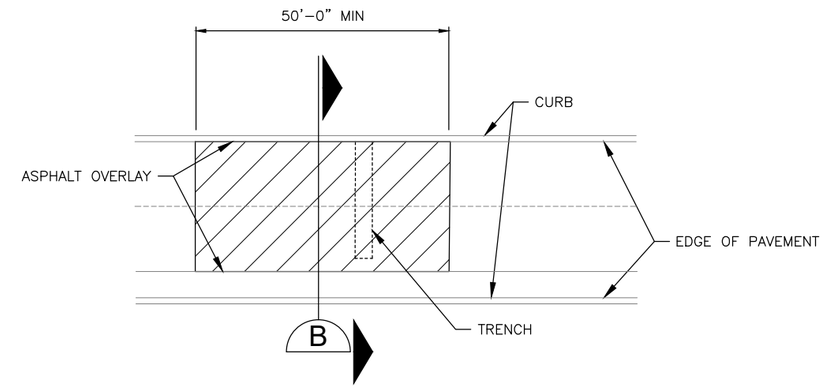

PLAN VIEW
N.T.S.

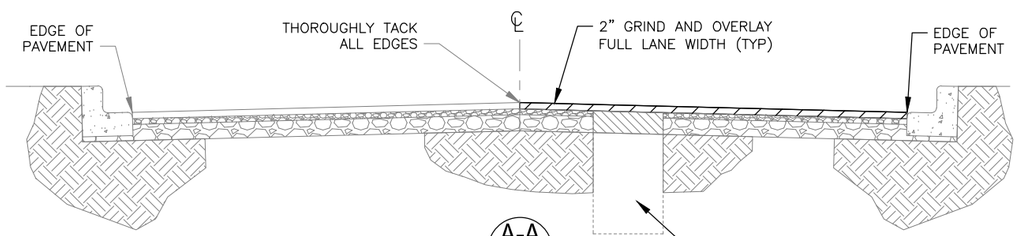

N.T.S.

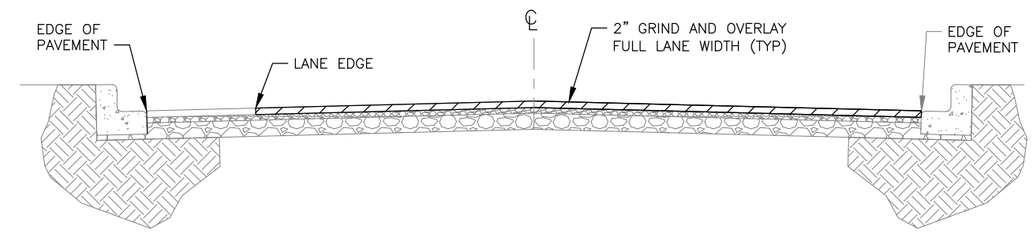

N.T.S.

NOTES:

1. SEE CITY OF WENATCHEE POLICY R–2 FOR THE STREET ASPHALT OVERLAY POLICY.
2. OVERLAY AREA MAY BE MODIFIED BY CITY ON OLDER PAVEMENT DEPENDING ON CONDITIONS OR SCHEDULED CONSTRUCTION/MAINTENANCE.
3. ADJUST ALL UTILITY CASTING TO FINISH GRADE AND RESTORE CHANNELIZATION AND LOOP DETECTORS.
4. POTHOLES TO BE RESTORED WITH A 1' T–CUT. IF AFTER THE 1' T–CUT THE PATCH IS MORE THAN 4'X4', A GRIND AND OVERLAY IS REQUIRED UNLESS OTHERWISE APPROVED BY PUBLIC WORKS. IF THE PATCH IS WITHIN 2 LANES OF TRAVEL, THE GRIND AND OVERLAY WILL BE REQUIRED ON BOTH LANES. 50' MIN. LENGTH.
5. INTENDED ONLY FOR DRIVING LANE.

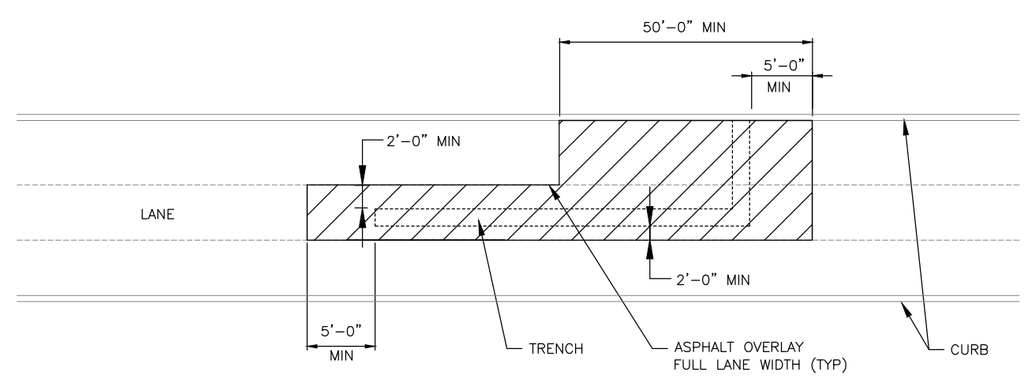

PLAN VIEW
N.T.S.

STANDARD DETAIL ASPHALT OVERLAY FOR TRENCH REPAIR

City of Wenatchee

REVISIONS	
DATE	INITIAL
01/01/2022	AJS

DATE DRAWN 10/02/2020	DATE APPROVED
CHECKED	
DRAWN CAW	APPROVED BY
DESIGNED	STANDARD SPECIFICATIONS
SCALE: AS SHOWN	

DETAIL NO.
R–310

PAGE
1 OF 1

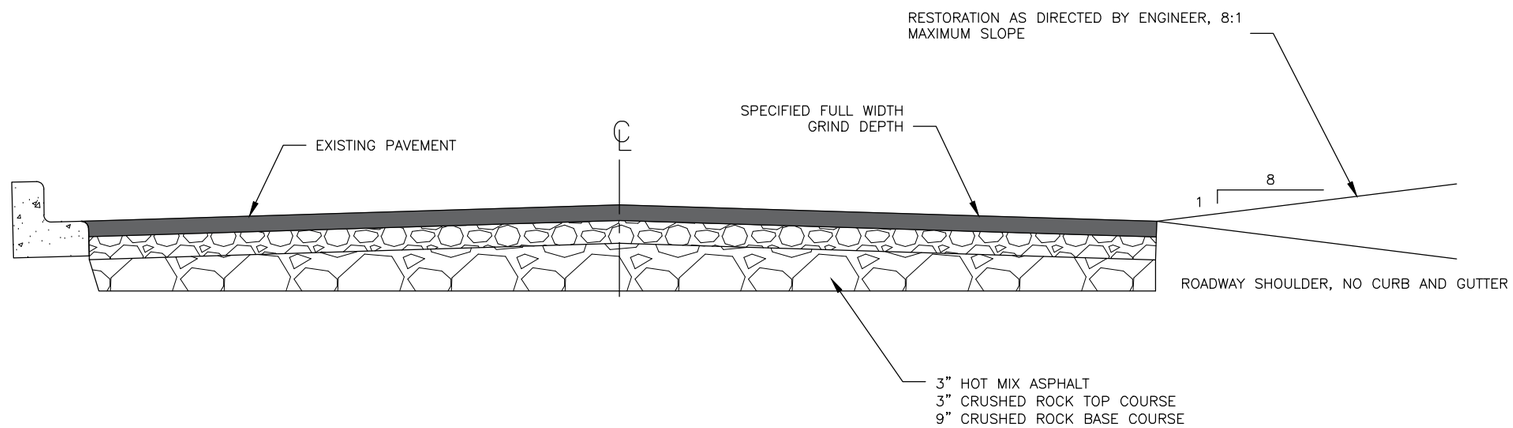

FULL WIDTH COLD PLANING DETAIL

NOTES:

1. ALL JOINTS PLANED PERPENDICULAR TO TRAVEL LANES SHALL BE IMMEDIATELY PAPER JOINTED, COLD MIXED, AS PER THIS DETAIL, AND MAINTAINED UNTIL HMA LAYER IS INSTALLED. PAPER JOINTS WILL BE REMOVED JUST PRIOR TO PLACEMENT OF WEARING COURSES.

2. ALL COLD MIX RAMPS WILL USE A BUTT JOINT

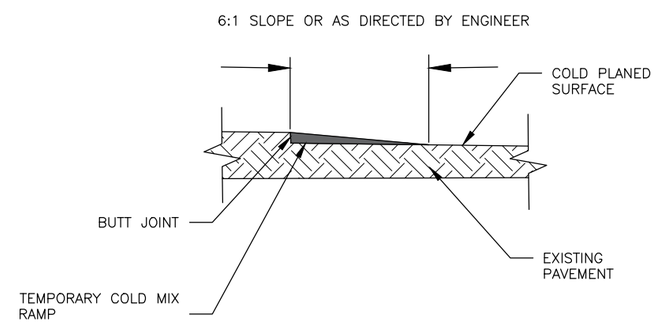

COLD MIX RAMP

STANDARD DETAIL
FULL WIDTH COLD PLANING DETAIL

City of Wenatchee

REVISIONS	
DATE	INITIAL
01/01/2022	AJS

SCALE: AS SHOWN	DATE DRAWN 10/02/2020		
DESIGNED	DRAWN CAW	CHECKED	DATE APPROVED
APPROVED BY		STANDARD SPECIFICATIONS	

DETAIL NO.
R-320

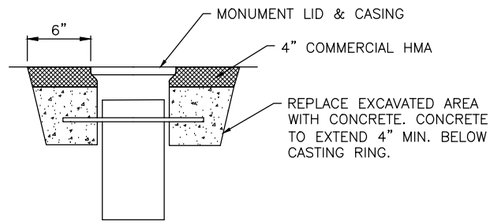

MONUMENT ADJUSTMENT DETAIL

N.T.S.

NOTES:

1. THE HIGHEST POINT ON THE CASING, RING, OR COVER SHALL BE NO LESS THAN FLUSH AND NO MORE THAN $\frac{1}{8}$" BELOW FINISHED GRADE.
2. USE PRE-CAST CONCRETE ADJUSTING RINGS TO RAISE THE FRAMES ON MANHOLES AND CATCH BASINS.
3. ADJUSTING RINGS SHALL BE GROUTED INSIDE AND OUT USING 6000 P.S.I. GROUT.
4. ASPHALT PATCH TO BE LEVEL WITH EXISTING ASPHALT SURFACE.

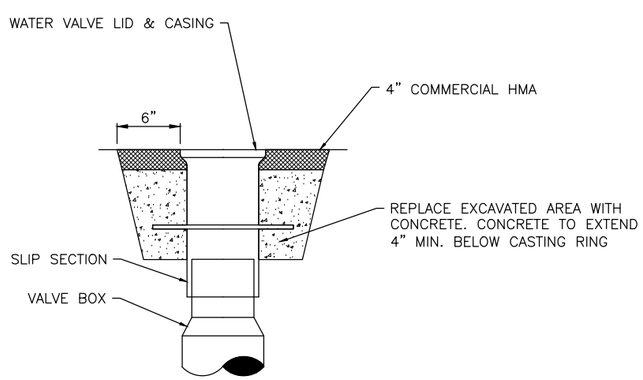

WATER VALVE ADJUSTMENT DETAIL

N.T.S.

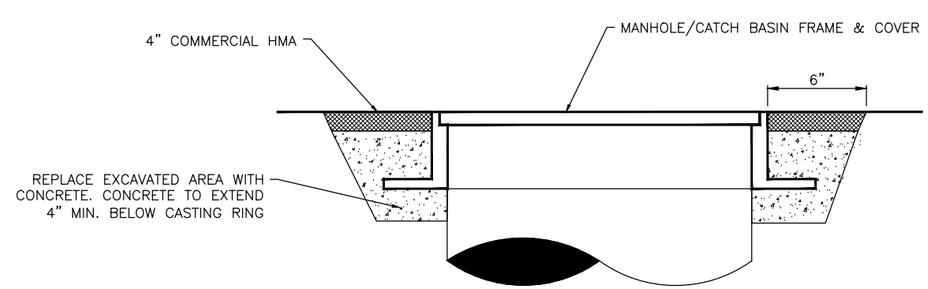

MANHOLE, CATCH BASIN ADJUSTMENT DETAIL

N.T.S.

STANDARD DETAIL
UTILITY ADJUST

City of Wenatchee

REVISIONS	
DATE	INITIAL
08/20	CAW
01/01/2022	AJS

SCALE: AS SHOWN
DESIGNED
DRAWN
DATE DRAWN 02/06
CHECKED SK
APPROVED BY
DATE APPROVED
STANDARD SPECIFICATIONS

DETAIL NO.
R-330

PAGE
1 OF 1

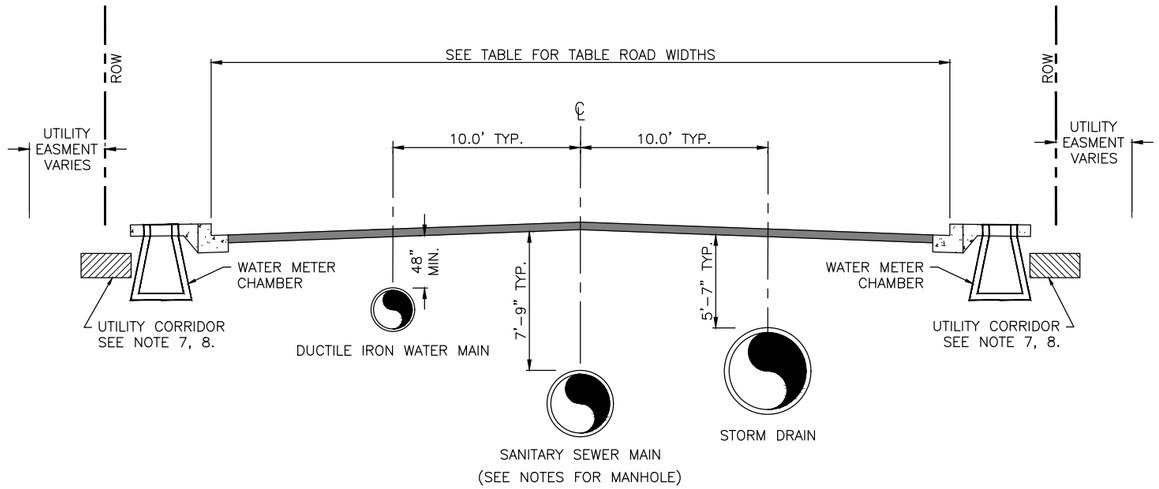

TYPICAL UTILITY PLACEMENT

N.T.S.

ROAD WIDTH TABLE			
	LOCAL	COLLECTOR	ARTERIAL
CURB TO CURB	34	38	44–56

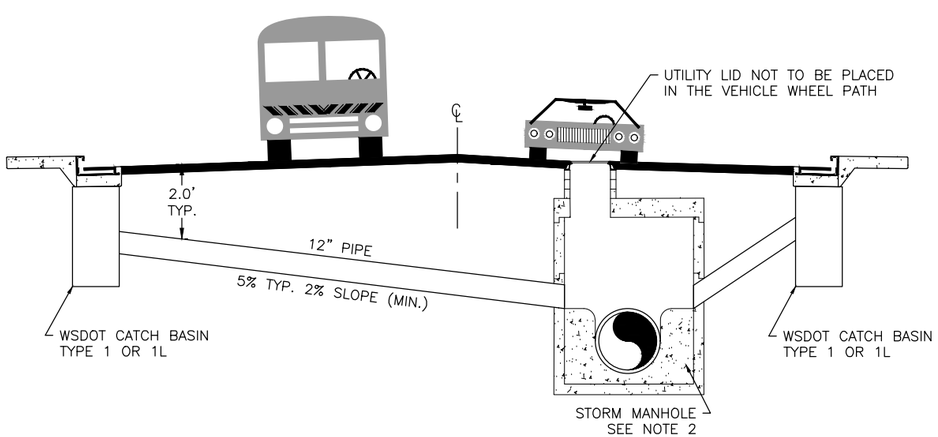

STORM SEWER CONFIGURATION

N.T.S.

NOTES:

1. SANITARY SEWER MANHOLES SHALL BE WSDOT MANHOLE TYPE 1 AND BE CHANNELIZED.
2. STORM SEWER MANHOLES SHALL BE WSDOT MANHOLE TYPE 3 AND BE CHANNELIZED.
3. THROUGH CURB INLET SHALL BE USED WITH ALL CATCH BASINS UNLESS OTHERWISE APPROVED.
4. ALL WATER & SEWER SEPARATION MUST BE DONE IN ACCORDANCE WITH DOE CRITERIA FOR SEWER WORKS DESIGN.
5. ALL CATCH BASINS SHALL HAVE A MINIMUM OF A 21" SUMP.
6. CATCH BASIN OUTLET PIPE TYPICAL 12" DIAMETER.
7. STORM SEWER LATERALS IN ACCORDANCE WITH D–200.
8. STREET LIGHT CONDUITS SHALL BE PLACED ACCORDING TO STREET LIGHTING DETAILS. ALL OTHER UNDERGROUND UTILITIES SHALL BE PLACED BEHIND THE SIDEWALK SO AS NOT TO OBSTRUCT THE PLACEMENT OF FUTURE WATER CHAMBER.
9. THE UTILITY CORRIDOR SHOULD BE PLACED IN THE PLANTER STRIP RESERVING PLACEMENT FOR STREET TREES.

STANDARD DETAIL UTILITY LOCATIONS FOR NEW ROADS

City of Wenatchee

REVISIONS		
DATE	INITIAL	
01/01/2022	AJS	

SCALE: AS SHOWN
DESIGNED DMN
DRAWN CAW
DATE DRAWN 09/09/2021
CHECKED
APPROVED BY
DATE APPROVED
STANDARD SPECIFICATIONS

DETAIL NO.
R–350

PAGE
1 OF 1

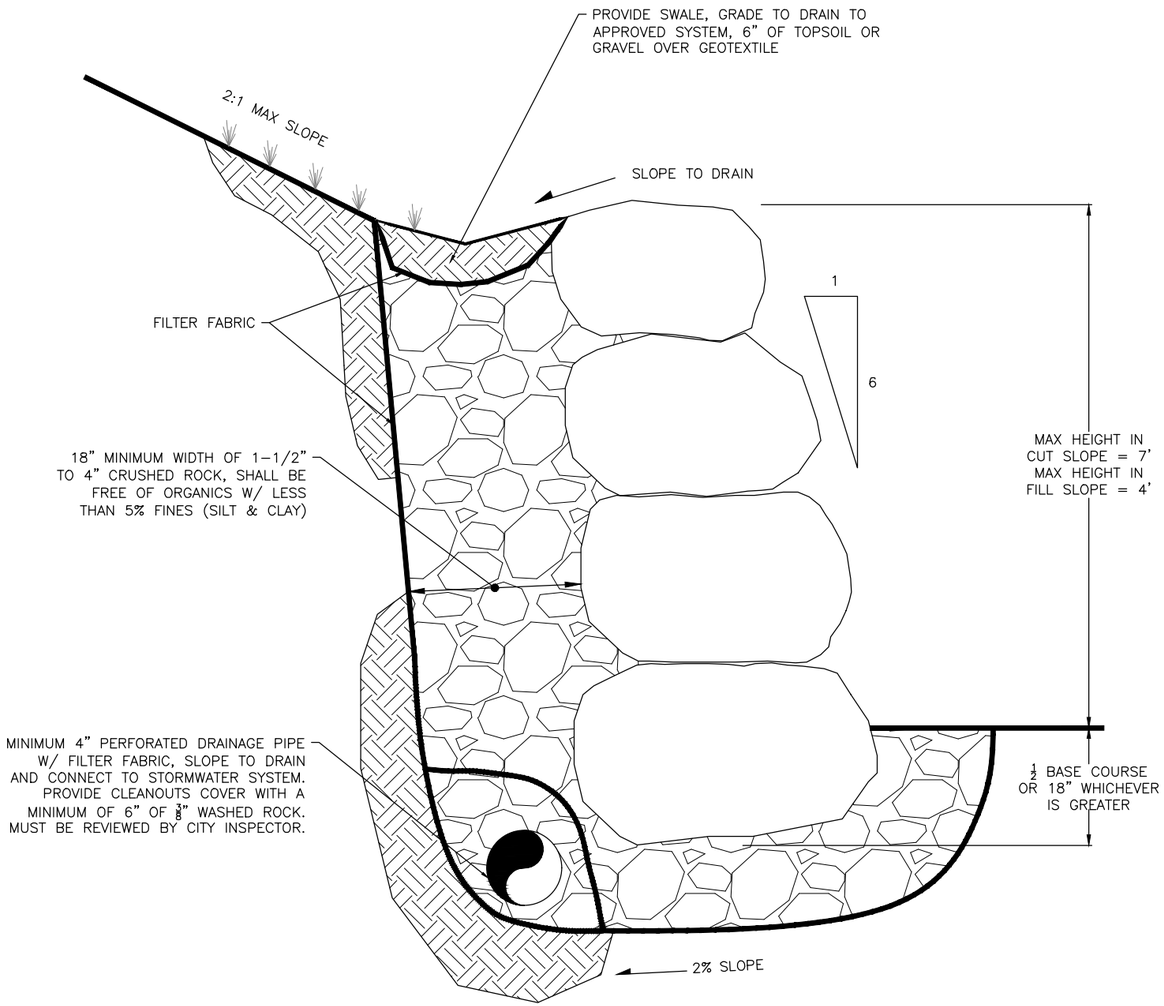

NOTES:

1. CALL FOR CLEAR AND GRADE INSPECTION PRIOR TO BASE COURSE BEING PLACED. VERIFICATION OF ROCKERY HEIGHT, FOUNDATION MATERIAL, AND ROCK SIZE BY CITY CLEAR AND GRADE INSPECTOR IS REQUIRED.
2. 4" TO 6" QUARRY SPALLS SHOULD BE PLACED DIRECTLY FROM TRUCK OR OTHER SUITABLE CONTAINER IN ORDER TO MAINTAIN CLEAN BACKFILL.
3. SPALLS MAY NOT BE NEEDED AT BASE OF ROCKERY IF NATIVE FOUNDATION MATERIAL IS SUITABLE AS DETERMINED BY THE GEOTECHNICAL ENGINEER OR THE CITY CLEARING AND GRADING INSPECTOR.
4. OPENINGS CHINKED WITH QUARRY SPALLS.
5. IF ROCKERY HEIGHT EXCEEDS 4', IT MUST BE DESIGNED BY A PRACTICING GEOTECHNICAL/CIVIL ENGINEER LICENSED IN THE STATE OF WASHINGTON. NO ROCKERY SHALL BE GREATER THAN 7' IN HEIGHT UNLESS APPROVED BY CITY.
6. A ROCKERY GREATER THAN 4' IN HEIGHT AND ON PRIVATE PROPERTY SHALL REQUIRE A BUILDING PERMIT WITH A THIRD PARTY INSPECTION TO BE CONSTRUCTED.
7. FILTER FABRIC SHALL BE MIRAFI 140 N SERIES OR APPROVED EQUAL.
8. OUTLET OF PERFORATED PIPE TO BE DETERMINED BEFORE CONSTRUCTION.

STANDARD DETAIL ROCKERY WALL

City of Wenatchee

REVISIONS	
DATE	INITIAL
01/01/2022	AJS

SCALE: AS SHOWN
DESIGNED
DRAWN CAW
APPROVED BY
DATE DRAWN 12/4/2020
CHECKED
DATE APPROVED
STANDARD SPECIFICATIONS

DETAIL NO.
R-400

PAGE
1 OF 1

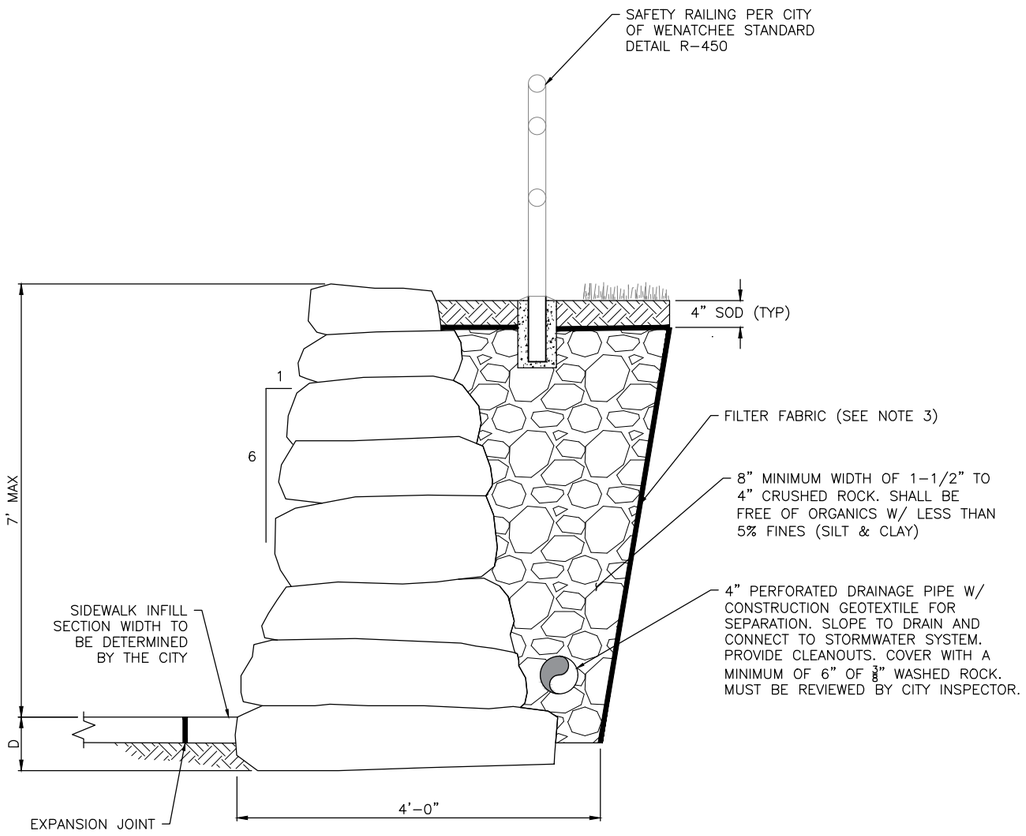

SIDEWALK BELOW ROCKERY

ROCKERY HEIGHT (FT)	EMBEDMENT (D)	MIN ROCK SIZE (BASE)	MIN ROCK SIZE (TOP)
2	3 INCHES	2–MAN	1–MAN
4	6 INCHES	3–MAN	2–MAN
6	9 INCHES	4–MAN	2–MAN
7	12 INCHES	5–MAN	2–MAN

NOTES:

1. ROCKERY MUST BE INSTALLED BY LICENSED CONTRACTOR.
2. IF ROCKERY HEIGHT EXCEEDS 4', IT MUST BE DESIGNED BY A PRACTICING GEOTECHNICAL/CIVIL ENGINEER LICENSED IN THE STATE OF WASHINGTON.
3. FILTER FABRIC SHALL BE MIRAFI 140 N SERIES OR APPROVED EQUAL.
4. IF ROCKERY IS CLOSER THAN 1V:1H BELOW FACE OF CURB TO BACK OF BASE EMBEDMENT ROCK. IT MUST BE DESIGNED BY AN ENGINEER TO INCLUDE TRAFFIC LOADING OF 250–PSF SURCHARGE.

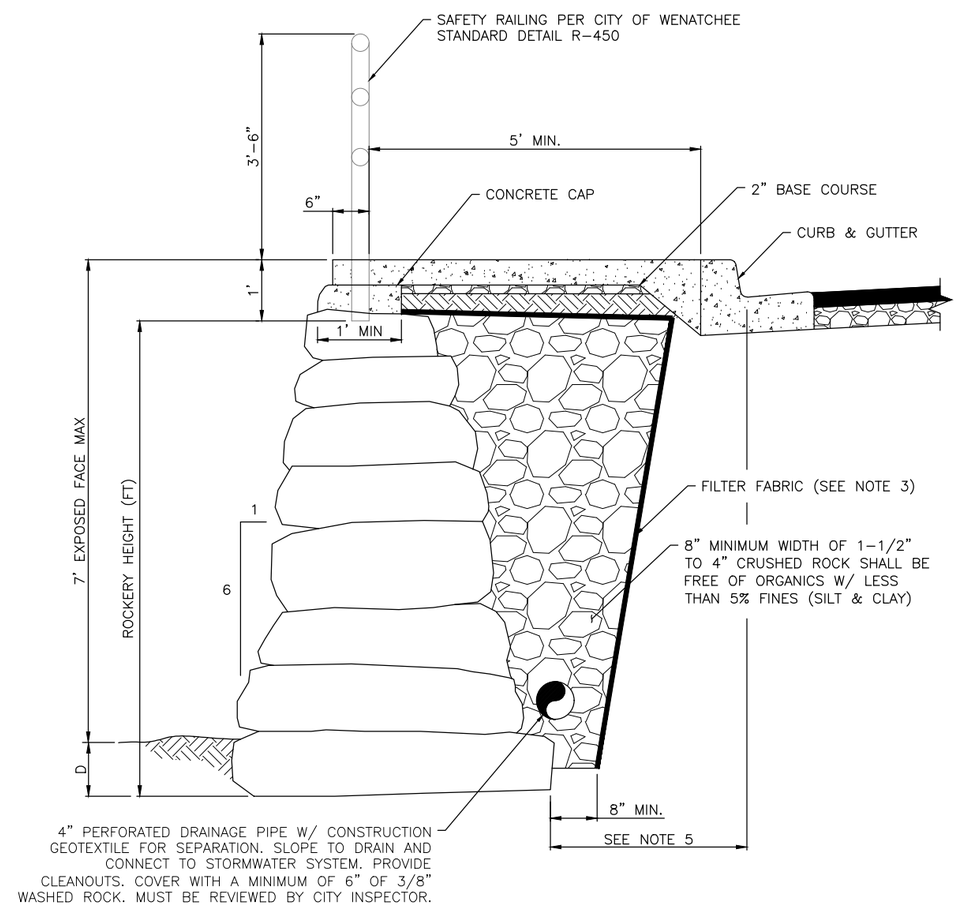

SIDEWALK ABOVE ROCKERY

STANDARD DETAIL
ROCKERY DETAIL
SIDEWALK SUPPORT

City of Wenatchee

REVISIONS		
DATE	01/01/2022	
INITIAL	AJS	

DATE DRAWN 10/22/2020
CHECKED
DATE APPROVED
SCALE: AS SHOWN
DESIGNED
DRAWN CAW
APPROVED BY
STANDARD SPECIFICATIONS

DETAIL NO.
R–410

PAGE
1 OF 1

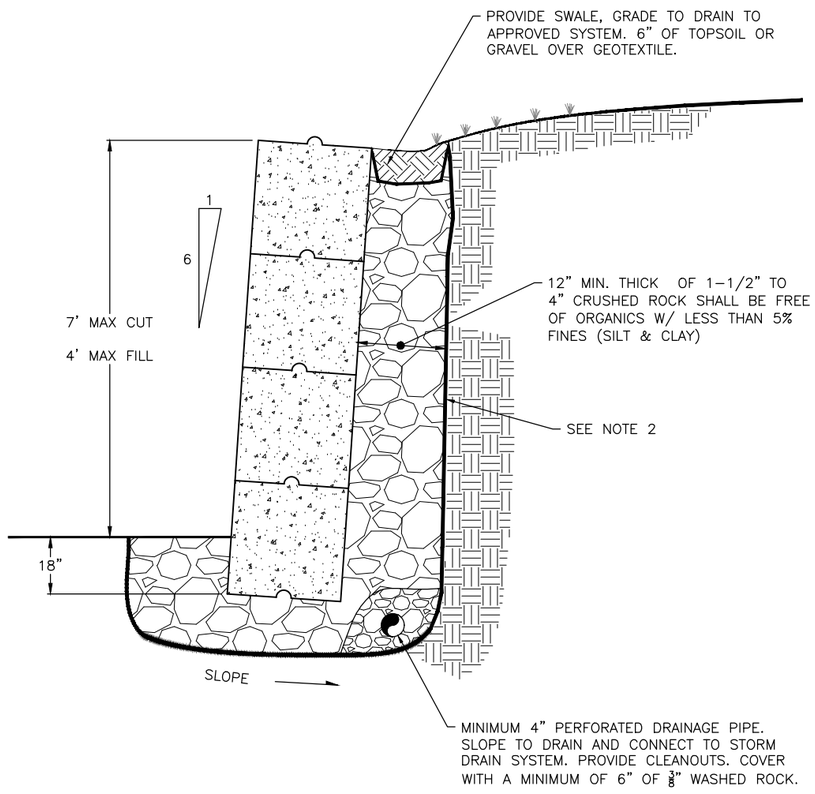

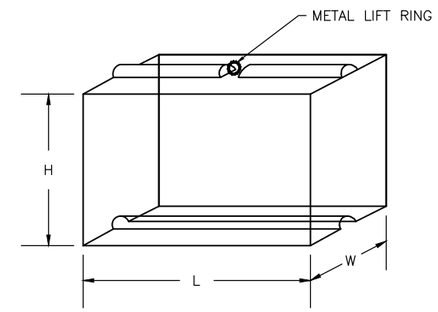

CONCRETE TONGUE AND GROOVE BLOCK

SIZES

H	L	W
2'-0"	3'-0"	2'-0"
2'-0"	6'-0"	2'-0"

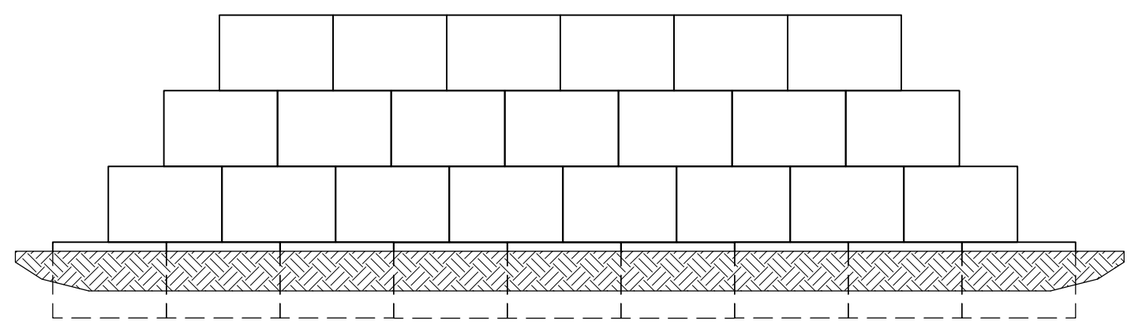

FRONT FACE OF WALL

NOTES:

1. MAX DEPTH OF CUT SHALL BE 8 FEET, AND MAX DEPTH OF FILL SHALL BE 4 FEET OR AS APPROVED BY GEOTECHNICAL ENGINEER. IN ANY CASE, THE CITY MAY REQUIRE INSPECTION AND APPROVAL BY A GEOTECHNICAL ENGINEER.
2. FILTER FABRIC SHALL BE MIRAFI 140 N SERIES OR APPROVED EQUAL.
3. SPALLS MAY NOT BE NEEDED AT BASE OF ROCKERY IF NATIVE FOUNDATION MATERIAL IS SUITABLE AS DETERMINED BY THE GEOTECHNICAL ENGINEER OR THE CITY OF WENATCHEE.

STANDARD DETAIL ECOLOGY BLOCK WALL

City of Wenatchee

REVISIONS		
DATE	INITIAL	
9/3/2021	CAW	
01/01/2022	AJS	

SCALE: AS SHOWN
DESIGNED
DRAWN CAW
DATE DRAWN 10/23/2020
CHECKED
APPROVED BY
DATE APPROVED
STANDARD SPECIFICATIONS

DETAIL NO.
R-420

PAGE
1 OF 1

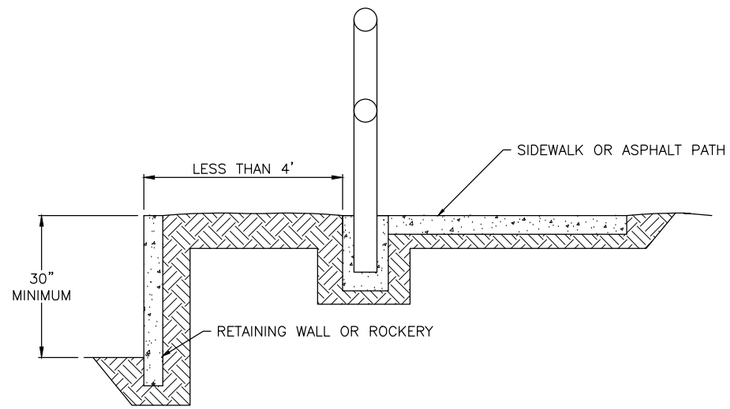

CONDITION 1

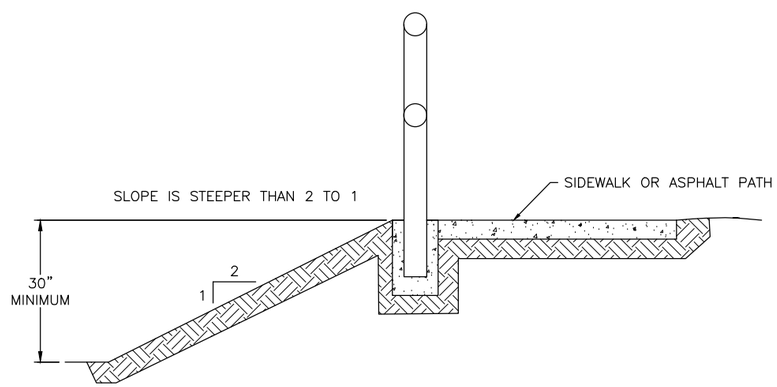

CONDITION 2

NOTES:

1. SAFETY RAIL TYPE AND INSTALLATION TO BE SPECIFIED BY THE REVIEW ENIGINEER.

2. SEE R-451 AND R-452 FOR SAFETY RAILINGS.

STANDARD DETAIL CONDITIONS REQUIRING SAFETY RAILINGS

City of Wenatchee

REVISIONS	
DATE	INITIAL

SCALE: AS SHOWN
DATE DRAWN 10/20/2020
DESIGNED
DRAWN CAW
CHECKED
APPROVED BY
DATE APPROVED
STANDARD SPECIFICATIONS

DETAIL NO.
R-450A

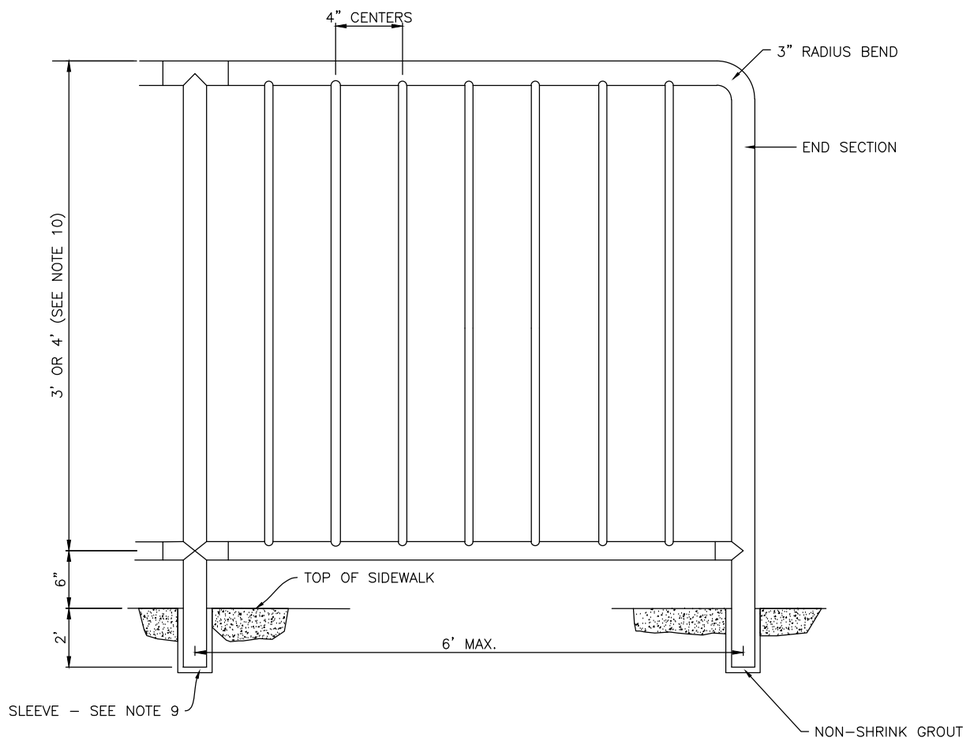

PIPE SCHEDULE

(ALL DIMENSIONS O.D.)

PANEL HEIGHT	TOP RAIL/POST	BOTTOM RAIL	BALUSTER
36"	1.90"	1.90"	.840"
42"	2.875"	2.375"	.840"

NOTES:

1. RAILING SHALL BE ALUMINUM PIPE RAIL OR APPROVED EQUIVALENT. INSTALLATION PER MANUFACTURER'S RECOMMENDATIONS.
2. SHOP DRAWINGS OF RAILING SHALL BE SUBMITTED FOR APPROVAL SHOWING COMPLETE DIMENSIONS AND DETAILS OF FABRICATION AND INCLUDING AN ERECTION DIAGRAM. MATERIALS BEING USED SHALL BE SPECIFIED IN THE SHOP DRAWINGS.
3. ALL ALUMINUM PARTS SHALL BE GIVEN A CLEAR ANODIC COATING AT LEAST 0.0006 INCHES THICK AND BE HOT WATER SEALED AND SHALL HAVE UNIFORM FINISH.
4. PIPE RAILING AND PIPE RAILING SPLICES MAY BE HEATED TO NO MORE THAN 400°F FOR A PERIOD TO EXCEED 30 MINUTES TO FACILITATE FORMING OR BENDING.
5. CUTTING SHALL BE DONE BY SAWING OR MILLING AND ALL CUTS SHALL BE TRUE AND SMOOTH. FLAME CUTTING WILL NOT BE PERMITTED.
6. PIPE RAILING, PIPE BALUSTERS AND PIPE RAILING SPLICESSHALL BE ADEQUATELY WRAPPED TO ENSURE SURFACE PROTECTION DURING HANDLING AND TRANSPORTATION TO THE JOB SITE.
7. WELDING OF ALUMINUM SHALL BE IN ACCORDANCE WITH THE LATEST AASHTO STANDARD SPECIFICATIONS FOR STRUCTURAL SUPPORTS FOR HIGHWAY SIGNS, LUMINAIRES AND TRAFFIC SIGNALS.
8. ALLOW FOR EXPANSION AT APPROXIMATELY EVERY FOURTH POST.
9. RAILS, POSTS AND FORMED ELBOWS SHALL BE A.S.T.M. B–241 OR B–429 ALLOY, 6063–T6 SCHEDULE 40 (STD. PIPE). BRACKETS, ENDCAPS AND OTHER FITTINGS SHALL BE A.S.T.M. 6063–T5. SPLICES AND REINFORCING SLEEVES SHALL BE DRAWN ALUMINUM TUBING 6063–T832. SLEEVE I.D. SHALL BE 1" GREATER POST O.D.
10. PANEL HEIGHT: 36 INCHES FOR PEDESTRIAN USES
    42 INCHES FOR BIKE PATHS.

STANDARD DETAIL SAFETY RAILING IN SIDEWALK

City of Wenatchee

REVISIONS	
DATE	INITIAL

SCALE: AS SHOWN
DESIGNED
DRAWN CAW
APPROVED BY
DATE DRAWN 10/20/2020
CHECKED
DATE APPROVED
STANDARD SPECIFICATIONS

DETAIL NO.
R–450B

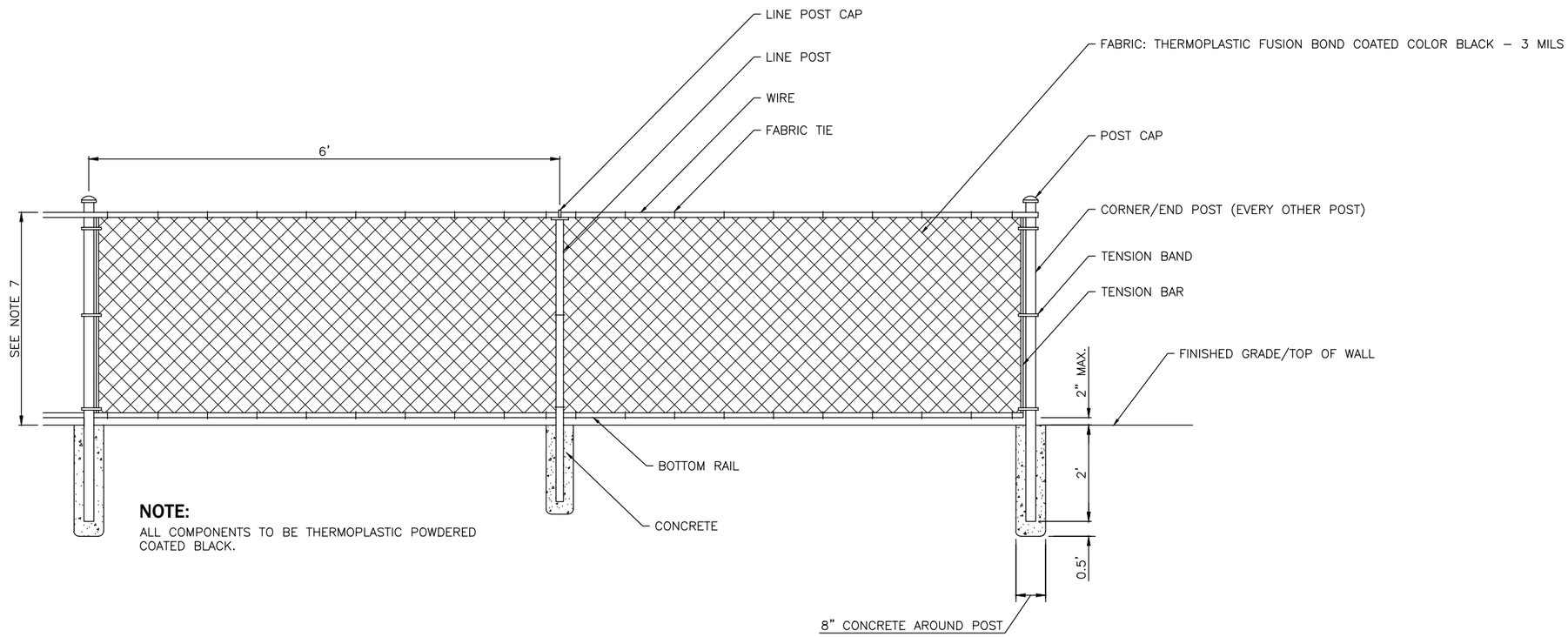

NOTE:
ALL COMPONENTS TO BE THERMOPLASTIC POWDERED COATED BLACK.

PIPE SCHEDULE

(ALL DIMENSIONS I.D.)

BOTTOM RAIL	CORNER/END POST	LINE POST
1.25"	2.5"	2"

NOTES:

1. ALL FENCING MATERIALS SHALL COMPLY WITH THE WSDOT/APWA STANDARD SPECIFICATIONS SECTION 9–16 CLASS 1 MATERIAL. INSTALLATIONS PER MANUFACTURER'S RECOMMENDATIONS.
2. SHOP DRAWINGS OF RAILING SHALL BE SUBMITTED FOR APPROVAL SHOWING COMPLETE DIMENSIONS AND DETAILS OF FABRICATION AND INCLUDING AN ERECTION DIAGRAM. MATERIALS BEING USED SHALL BE SPECIFIED IN THE SHOP DRAWINGS.
3. ALL STEEL PARTS SHALL BE GIVEN A BLACK ULTRAVIOLET–INSENSITIVE THERMOPLASTIC POWDER COATING AT LEAST 3 MILS THICK AND SHALL HAVE A UNIFORM FINISH.
4. CUTTING SHALL BE DONE BY SAWING OR MILLING AND ALL CUTS SHALL BE TRUE AND SMOOTH. FLAME CUTTING WILL NOT BE PERMITTED.
5. ALL MATERIALS SHALL BE ADEQUATELY WRAPPED TO ENSURE SURFACE PRROTECTION DURING HANDLING AND TRANSPORTATION TO THE JOB SITE.
6. ANY WELDING OF STEEL SHALL BE IN ACCORDANCE WITH THE LATEST AASHTO STANDARD SPECIFICATIONS FOR STRUCTURAL SUPPORTS FOR HIGHWAY SIGNS, LUMINARIES AND TRAFFIC SIGNALS.
7. PANEL HEIGHT: 36 INCHES FOR ALL PEDESTRIAN USES
   42 INCHES FOR BIKE PATHS

STANDARD DETAIL
CHAIN LNK SIDEWALK SAFETY RAIL

City of Wenatchee

REVISIONS	
DATE	INITIAL

SCALE: AS SHOWN	DATE DRAWN 10/21/2020
DESIGNED	DRAWN CAW
CHECKED	
APPROVED BY	DATE APPROVED

STANDARD SPECIFICATIONS

DETAIL NO.
R–450C

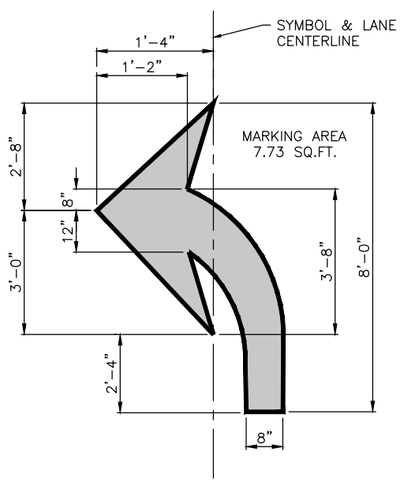

WSDOT STANDARD PLAN M-24.40-02

TURN ARROW

N.T.S.

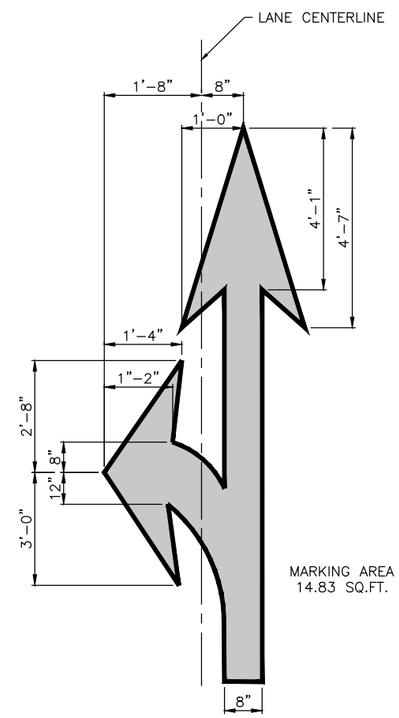

WSDOT STANDARD PLAN M-24.40-02

COMBINATION ARROW

N.T.S.

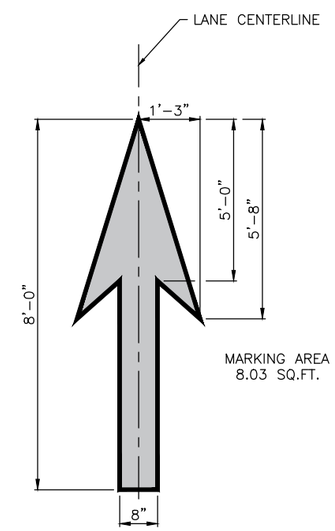

WSDOT STANDARD PLAN M-24.40-02

STRAIGHT ARROW

N.T.S.

STANDARD DETAIL PAVEMENT MARKINGS ARROW

City of Wenatchee

REVISIONS		
DATE		INITIAL
12/21/2020		CAW
01/01/2022		AJS

SCALE: AS SHOWN

DESIGNED

DRAWN: RLK

APPROVED BY

DATE DRAWN: 02/21/2006

CHECKED: SK

DATE APPROVED

STANDARD SPECIFICATIONS

DETAIL NO.

R-500A

PAGE

1 OF 2

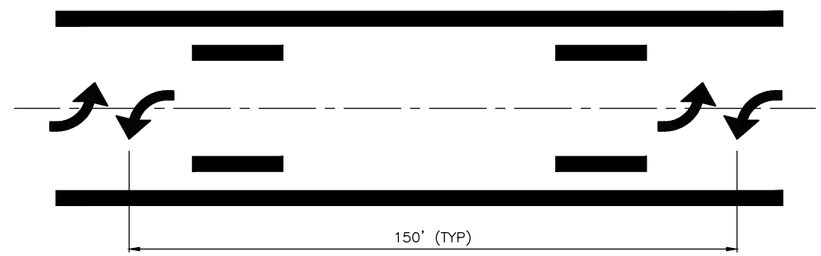

TWO-WAY LEFT TURN MARKERS

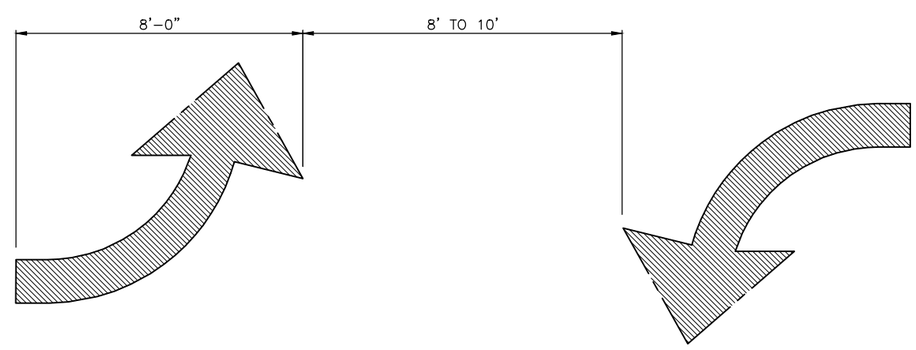

TYPICAL ARROW

NOTES:

1. THERMOPLASTIC REQUIRED

STANDARD DETAIL
TWO-WAY LEFT TURN
AND TYPICAL ARROW

City of Wenatchee

REVISIONS	
DATE	INITIAL
01/01/2022	AJS

SCALE: AS SHOWN
DATE DRAWN 10/05/2020
DESIGNED
DRAWN CAW
CHECKED
APPROVED BY
DATE APPROVED
STANDARD SPECIFICATIONS

DETAIL NO.
R-500B

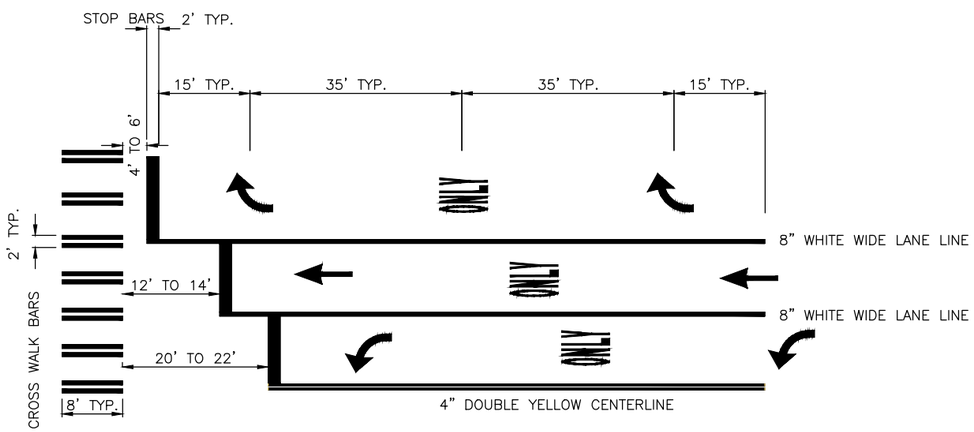

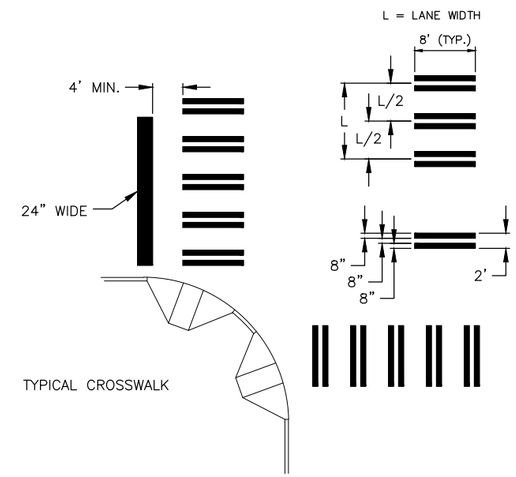

NOTES:

1. LOWER LANDING OF CURB RAMP SHALL FALL WHOLLY WITHIN CROSWALK LINES.
2. EXACT LOCATION OF CROSSWALK SHALL BE APPROVED BY THE CITY OF WENATCHEE.
3. EXISTING CROSSWALK MARKINGS THAT CONFLICT WITH NEW CROSSWALK MARKINGS SHALL BE REMOVED BY GRINDING.

STANDARD CROSSWALK AND STOP BAR DETAIL
N.T.S.

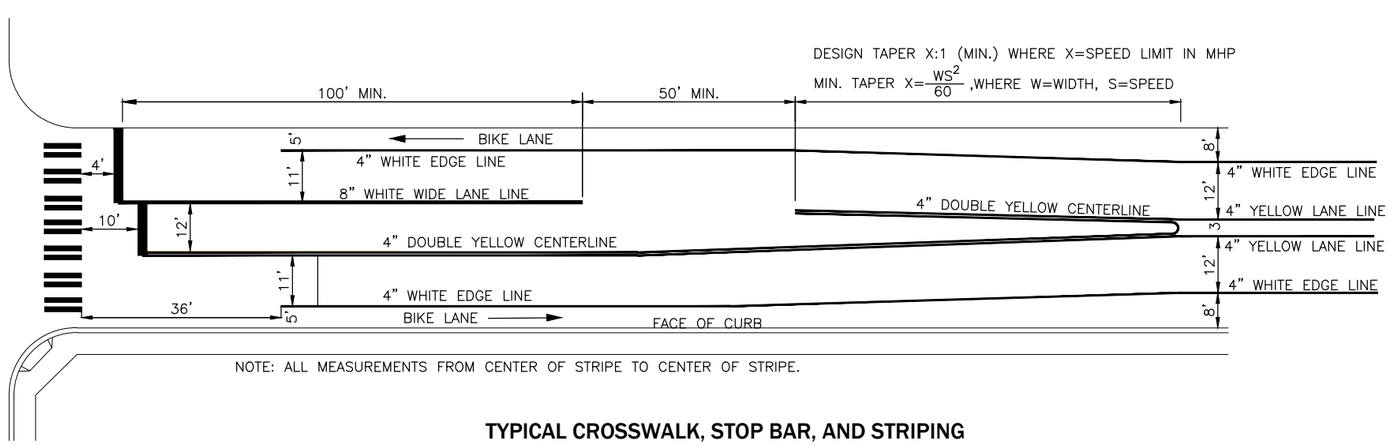

NOTE: ALL MEASUREMENTS FROM CENTER OF STRIPE TO CENTER OF STRIPE.

TYPICAL CROSSWALK, STOP BAR, AND STRIPING FOR ARTERIAL STREETS

STANDARD DETAIL PAVEMENT MARKING LAYOUT

City of Wenatchee

REVISIONS	
DATE	INITIAL
01/01/2022	AJS

DATE DRAWN
CHECKED
DATE APPROVED
STANDARD SPECIFICATIONS

SCALE: AS SHOWN
DRAWN CAW
DESIGNED DMN
APPROVED BY

DETAIL NO.
R-510

PAGE
1 OF 1

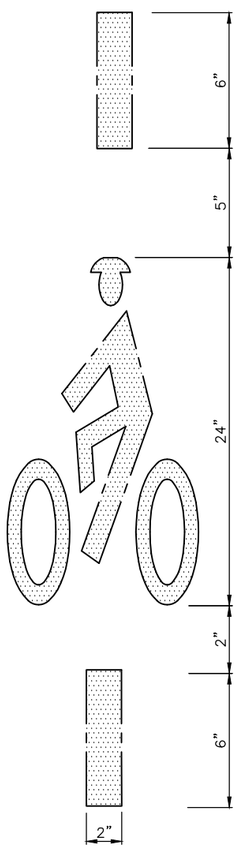

BICYCLE DETECTION MARKING DETAIL

NOT TO SCALE

NOTES:

1. INSTALL MARKING AT SIGNALIZED INTERSECTIONS TO INDICATE WHERE BICYCLES SHOULD STOP IN ORDER TO ACHIEVE REGULAR AND RELIABLE DETECTION BY SIGNAL EQUIPMENT.
2. USE MARKING ON ANY APPROACH TO A SIGNALIZED INTERSECTION WHERE LOOP DETECTORS SPECIFICALLY FOR BICYCLES ARE NOT PRESENT AND ANY APPROACH WHICH IS SHOWN A GREEN INDICATION ONLY WHEN VEHICLE LOOPS ARE ACTUATED, I.E. THE APPROACH IS NOT ON "RECALL" OPERATION.
3. PLACE MARKING SUCH THAT BICYCLES WHICH STOP OVER THE MARKINGS WILL ACTIVATE THE SIGNAL.
4. PLACE THE MARKING TO ALLOW BICYCLES GOING THROUGH TURNING RIGHT, OR TURNING LEFT TO ACTIVATE THE SIGNAL.
5. MARKINGS ARE NOT NECESSARY IN EXCLUSIVE LEFT TURN LANES OF APPROACHES THAT ARE OPERATED BOTH (1) ON RECALL AND (2) IN PERMISSIVE ONLY MODE.
6. IF AN APPROACH AS MULTIPLE LANES SERVING THROUGH MOVEMENTS AND/OR MULTIPLE LANES SERVING THE SAME TURNING MOVEMENT, ONLY THE RIGHTMOST OF SUCH MULTIPLE LANE GROUPS SHALL BE MARKED.
7. WHERE MULTIPLE LOOPS ARE PRESENT IN A SINGLE LANE, MARKINGS SHALL BE PLACED AS CLOSE TO THE STOP BAR AS POSSIBLE.
8. IN GENERAL, MARKING SHALL BE PLACED OVER THE RIGHT EDGES OF SQUARE LOOPS OR CONGRUENT WITH A LINE TANGENT TO THE RIGHTMOST POINT ON THE EDGE OF A CIRCULAR LOOP.
9. IN GENERAL, BICYCLE MARKINGS ARE NOT NEEDED ON APPROACHES WHERE VIDEO DETECTION IS IN PLACE, AS LONG AS BICYCLES CAN STOP BE DETECTED REGULARLLY AS RELIABLY BY STOPPING AT THE STOP BAR IN THE MIDDLE OF THE LANE.
10. MATERIAL SHALL BE PAINT OR OTHER APPROVED MATERIAL.
11. SEE ALSO 2009 MANUAL ON UNIFORM TRAFFIC CONTROL DEVICES SECTION 9C.05: RCW 46.61.710; 2004 STANDARD HIGHWAY SIGNS PAGE 10–17.

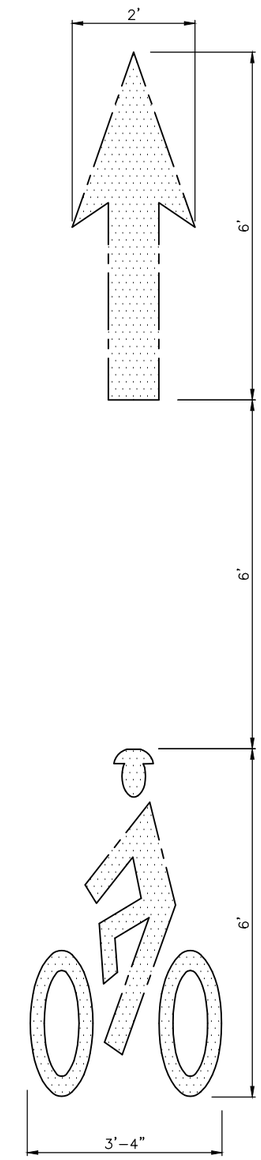

NOTES:

1. BIKE LANE SYMBOLS MATERIAL SHALL BE 90 MILL, PREFORMED, SKID RESISTANT THERMOPLASTIC.
2. BICYCLE SYMBOLS FACES ROADWAY CENTERLINE.

STANDARD DETAIL BICYCLE LANE MARKINGS

City of Wenatchee

REVISIONS	
DATE	INITIAL
01/01/2022	AJS

SCALE: AS SHOWN
DESIGNED
DRAWN CAW
APPROVED BY
DATE DRAWN 10/05/2020
CHECKED
DATE APPROVED
STANDARD SPECIFICATIONS

DETAIL NO.
R–550A

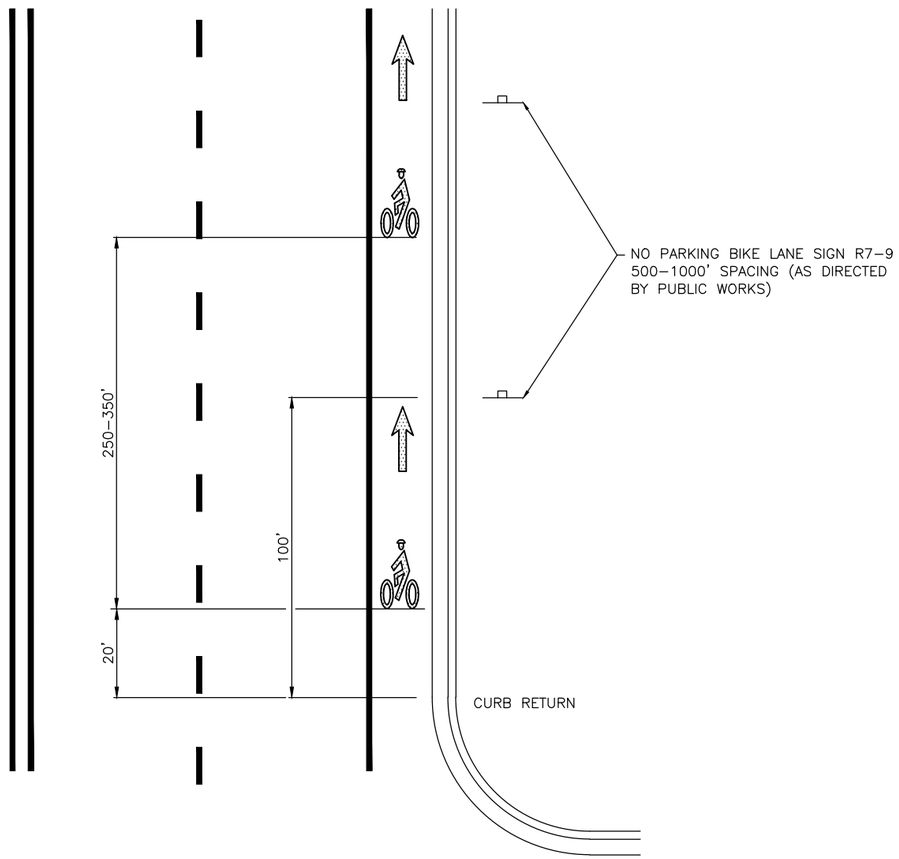

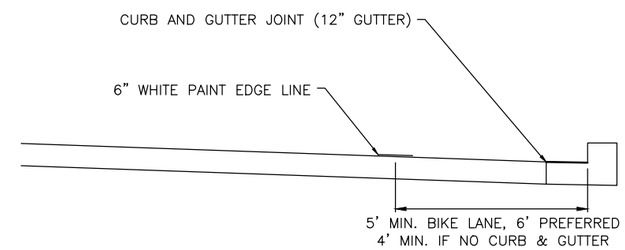

(MEASURED TO FACE OF CURB OR CENTER OF PAINT STRIPE)
BICYCLE LANE WITHOUT PARKING

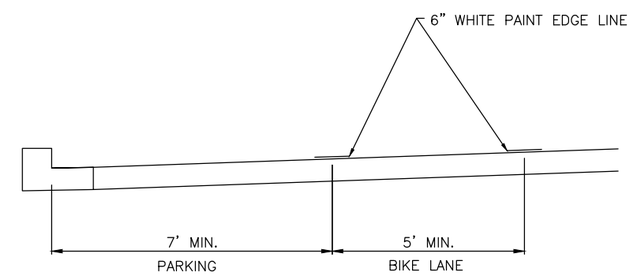

(MEASURED TO FACE OF CURB OR CENTER OF PAINT STRIPE)
BICYCLE LANE WITH PARKING

NOTES:

1. SEE MUTCD FOR MORE INFORMATION AND SPECIFICATIONS.
2. PER SEC. 9B.04 2009 MUTCD, DO NOT USE R3–17 SIGNS.
3. BICYCLIST SYMBOLS PER R–550.

STANDARD DETAIL
TYPICAL BICYCLE LANE

City of Wenatchee

REVISIONS	
DATE	INITIAL
01/01/2022	AJS

SCALE: AS SHOWN	DATE DRAWN 10/05/2020
DESIGNED	DRAWN CAW
CHECKED	
APPROVED BY	DATE APPROVED
STANDARD SPECIFICATIONS	

DETAIL NO.
R–550B

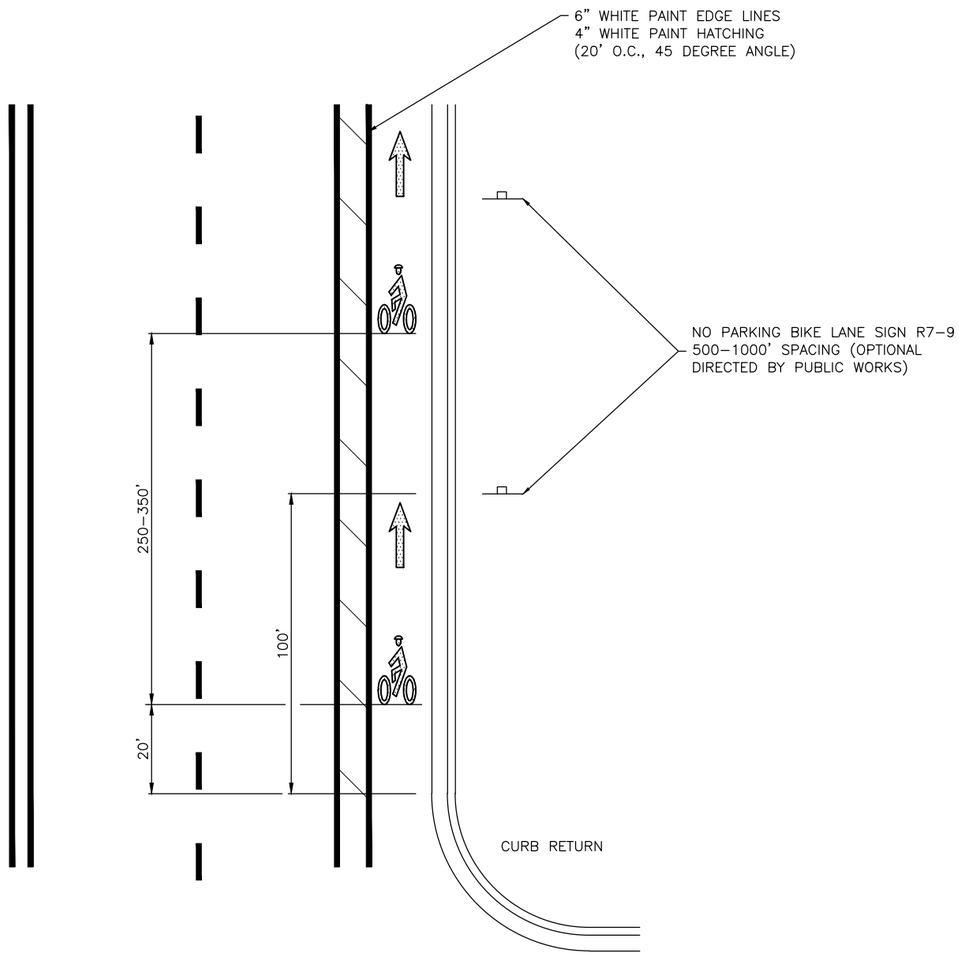

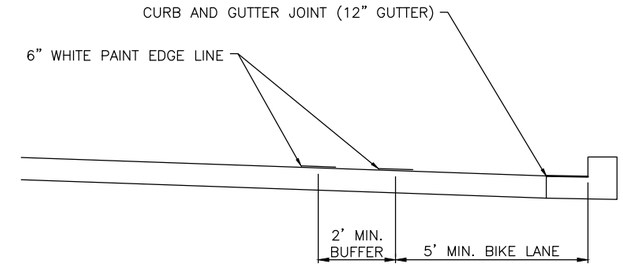

BUFFERED BICYCLE LANE WITHOUT PARKING

(MEASURED TO FACE OF CURB OR CENTER OF PAINT STRIPE)

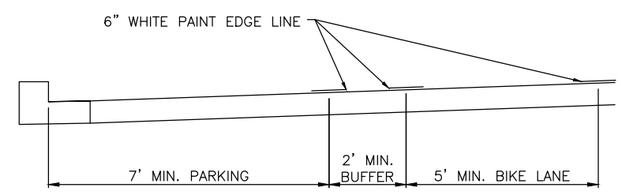

BICYCLE LANE WITH PARKING

(MEASURED TO FACE OF CURB OR CENTER OF PAINT STRIPE)

NOTES:

1. SEE MUTCD FOR MORE INFORMATION AND SPECIFICATIONS
2. PER SEC. 9B.04 2009 MUTCD, DO NOT USE R3-17 SIGNS.
3. BICYCLIST SYMBOLS PER R-550.

STANDARD DETAIL TYPICAL BUFFERED BICYCLE LANE

City of Wenatchee

REVISIONS	
DATE	INITIAL
01/01/2022	AJS

SCALE: AS SHOWN	DATE DRAWN 10/05/2020
DESIGNED	DRAWN CAW
APPROVED BY	CHECKED
	DATE APPROVED

STANDARD SPECIFICATIONS

DETAIL NO.
R-550C

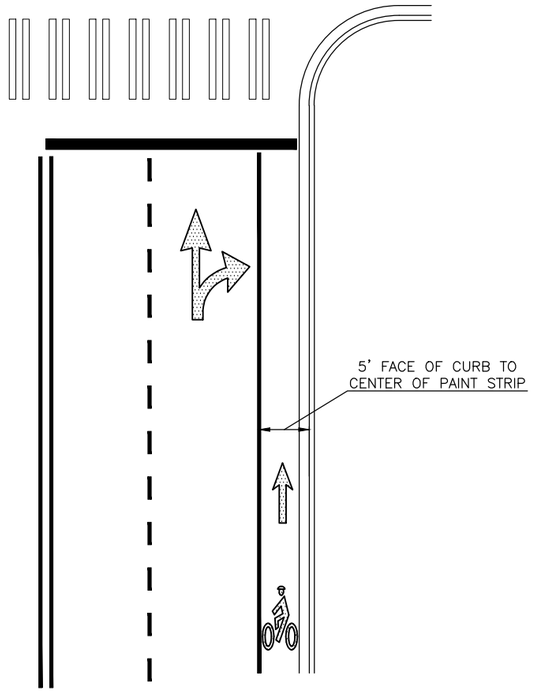

TYPICAL RIGHT-THROUGH LANE

(BICYCLE LANE CONTINUES THROUGH INTERSECTION)

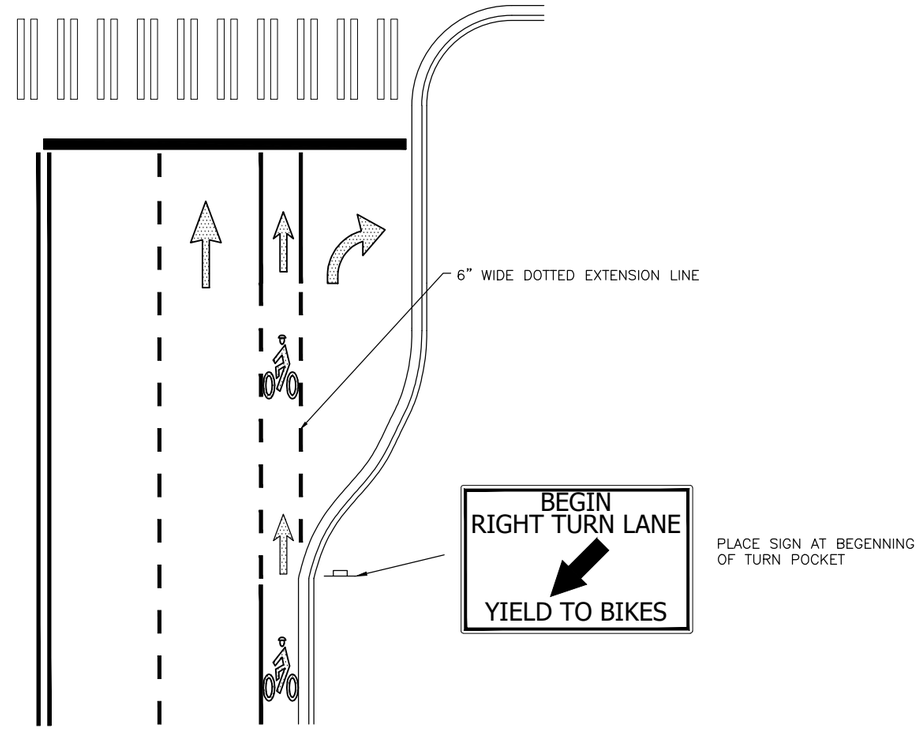

TYPICAL RIGHT TURN POCKET

(BICYCLE LANE CONTINUES THROUGH INTERSECTION)

NOTES:

SEE MUTCD FOR MORE INFORMATION AND SPECIFICATIONS.

STANDARD DETAIL
TYPICAL BICYCLE LANE AT INTERSECTION

City of Wenatchee

REVISIONS	
DATE	INITIAL
01/01/2022	AJS

SCALE: AS SHOWN	DATE DRAWN 10/05/2020		
DESIGNED	DRAWN CAW	CHECKED	DATE APPROVED
APPROVED BY		STANDARD SPECIFICATIONS	

DETAIL NO.

R-550D

PAGE

4 OF 4

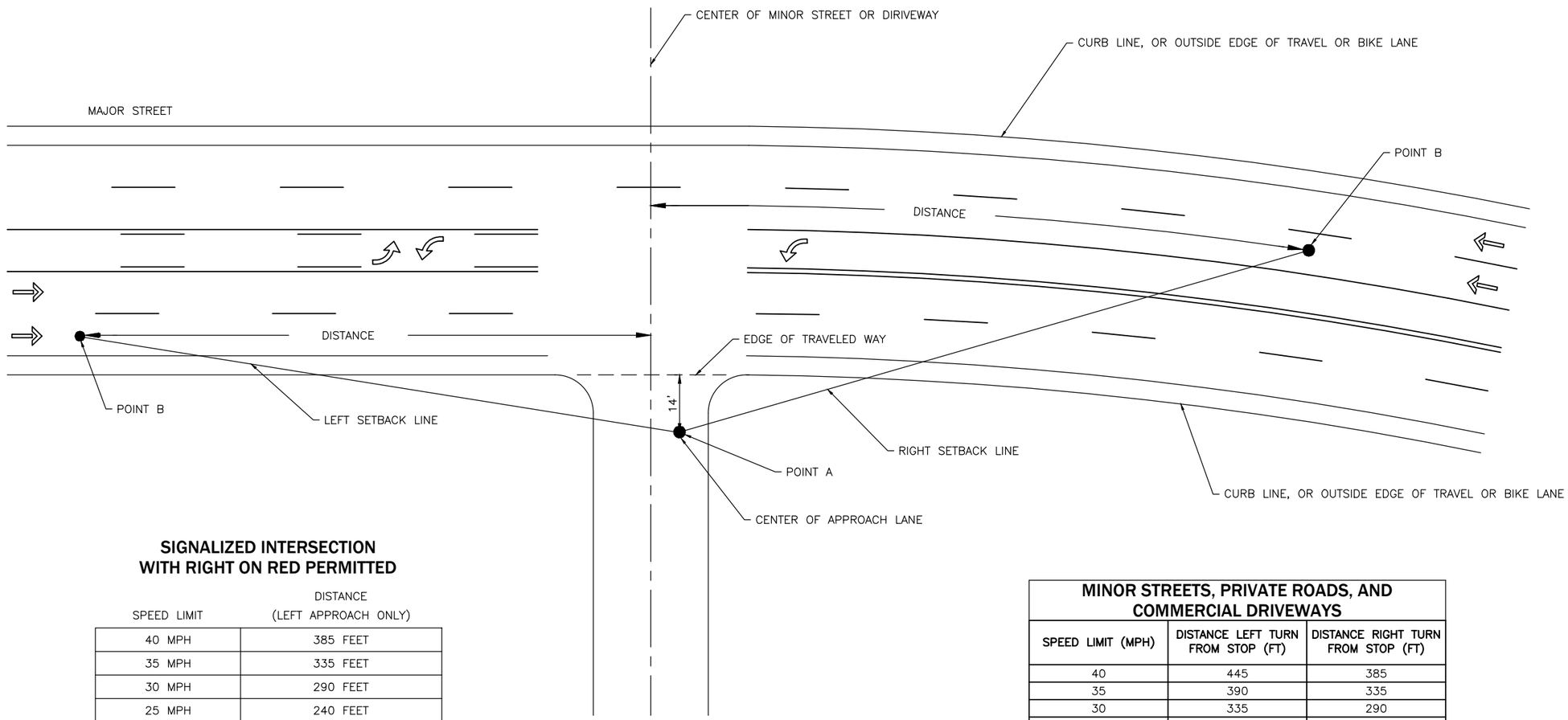

SIGNALIZED INTERSECTION WITH RIGHT ON RED PERMITTED

SPEED LIMIT	DISTANCE (LEFT APPROACH ONLY)
40 MPH	385 FEET
35 MPH	335 FEET
30 MPH	290 FEET
25 MPH	240 FEET

MINOR STREET, PRIVATE ROAD, COMMERCIAL AND RESIDENTIAL DRIVEWAYS

MINOR STREETS, PRIVATE ROADS, AND COMMERCIAL DRIVEWAYS

SPEED LIMIT (MPH)	DISTANCE LEFT TURN FROM STOP (FT)	DISTANCE RIGHT TURN FROM STOP (FT)
40	445	385
35	390	335
30	335	290
25	280	240

RESIDENTIAL DRIVEWAYS

SPEED LIMIT	DISTANCE
40 MPH	325 FEET
35 MPH	250 FEET
30 MPH	200 FEET
25 MPH	150 FEET

NOTES:

1. FOR RESIDENTIAL DRIVEWAYS, DISTANCE OF POINT A FROM EDGE OF TRAVEL LANE IS 10'.

STANDARD DETAIL
SIGHT DISTANCE SETBACK

City of Wenatchee

REVISIONS	
DATE	INITIAL
01/01/2022	AJS

DATE DRAWN 01/28/21
CHECKED
DATE APPROVED
SCALE: AS SHOWN
DESIGNED
DRAWN CAW
APPROVED BY
STANDARD SPECIFICATIONS

DETAIL NO.
R-600

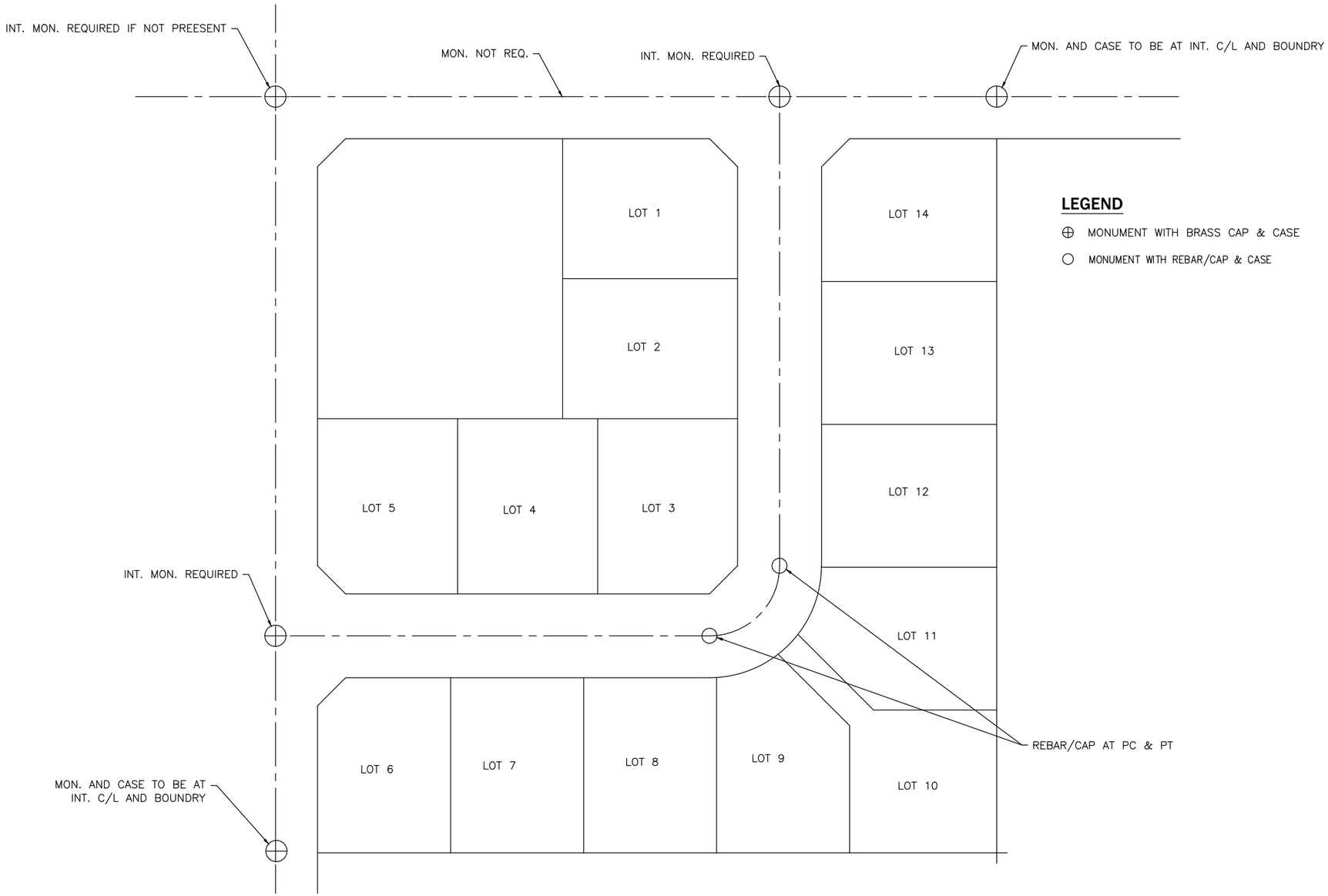

MONUMENT PLACEMENT
N.T.S.

STANDARD DETAIL MONUMENT PLACEMENT

City of Wenatchee

REVISIONS		
DATE	INITIAL	
10/26/2020	CAW	
01/01/2022	AJS	

SCALE: AS SHOWN
DESIGNED
DRAWN RLK
APPROVED BY
DATE DRAWN 02/21/2006
CHECKED SK
DATE APPROVED
STANDARD SPECIFICATIONS

DETAIL NO.
R–700

PAGE
1 OF 1

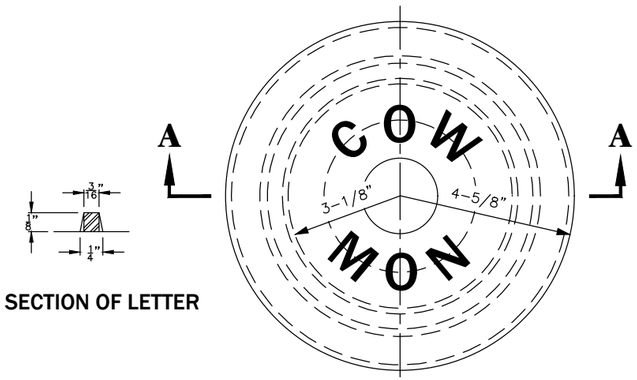

SECTION OF LETTER

PLAN OF COVER

NOTES:

1. WHEN PLACING MONUMENTS IN PAVED SURFACES, HEIGHT OF CASE OR COVER SHALL BE NO LESS THAN ZERO AND NO MORE THAN 1/8" BELOW FINISHED GRADE.
2. MEETS CITY OF WENATCHEE AND WHASHINGTON STANDARD SPECIFICATIONS FOR MONUMENT CASE AND COVER. SUITABLE FOR HEAVY TRAFFIC LOADING. UNIT WEIGHT 39LBS.
3. MONUMENTS SHALL BE PROTECTED FROM DAMAGE ACCORDING TO R.C.W 58.24.040, AND R.C.W. 58.09.130. IF MONUMENTS ARE TO BE DISTURBED, THEN W.A.C. 332-120 APPLIES.
4. CASTING SHALL BE GRAY IRON ASATM A48, AASHTO M 105, CLASS 30.
5. COVER AND SEAT SHALL BE MACHINED FOR PERFECT CONTACT AROUND CIRCUMFRENCE AND FULL WIDTH OF BEARING SURFACE.
6. APPROXIMATE WEIGHTS, STANDARD.
   CASE - 60 LBS
   COVER - 19 LBS
   TOTAL - 79 LBS
7. CONCRETE SHALL BE CLASS 3000.
8. PIPE MUST BE INSTALLED PRIOR TO ROAD SURFACING.

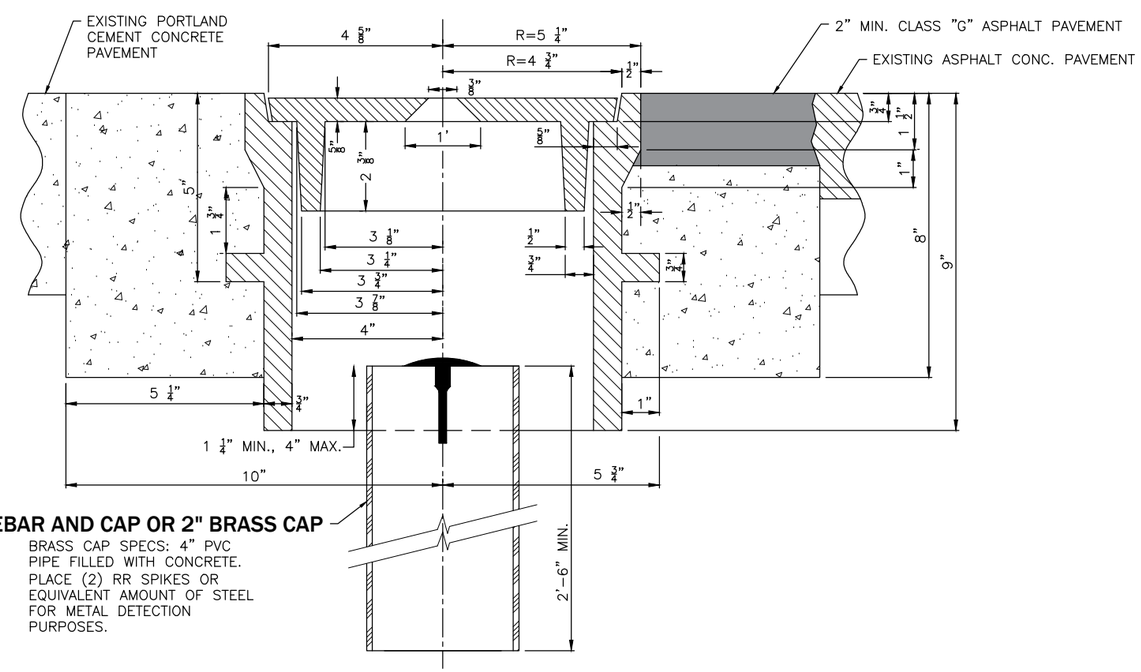

REBAR AND CAP OR 2" BRASS CAP

BRASS CAP SPECS: 4" PVC PIPE FILLED WITH CONCRETE. PLACE (2) RR SPIKES OR EQUIVALENT AMOUNT OF STEEL FOR METAL DETECTION PURPOSES.

SECTION A-A

STANDARD DETAIL MONUMENT CASE

City of Wenatchee

REVISIONS		
DATE	INITIAL	
12/21/2020	CAW	
01/01/2022	AJS	

SCALE: AS SHOWN	DATE DRAWN 02/21/2006		
DESIGNED	DRAWN RLK	CHECKED SK	DATE APPROVED
APPROVED BY		STANDARD SPECIFICATIONS	

DETAIL NO.
R-710

PAGE
1 OF 1

LUMINAIRE POLE DETAIL:

N.T.S.

POLE MUST BE UL LISTED AND BE LABLED AS SUCH

HAPCO # RTA30D8B4D1601 (6' ARM)
OR
HAPCO # RTA30D8B4D1801 (8' ARM)
OR
HAPCO # RTA30D8B4D1A01 (10' ARM)

DAVIT STYLE (OR MATCH EXISTING STYLE POLES WITH APPROVAL OF CITY ENGINEER)

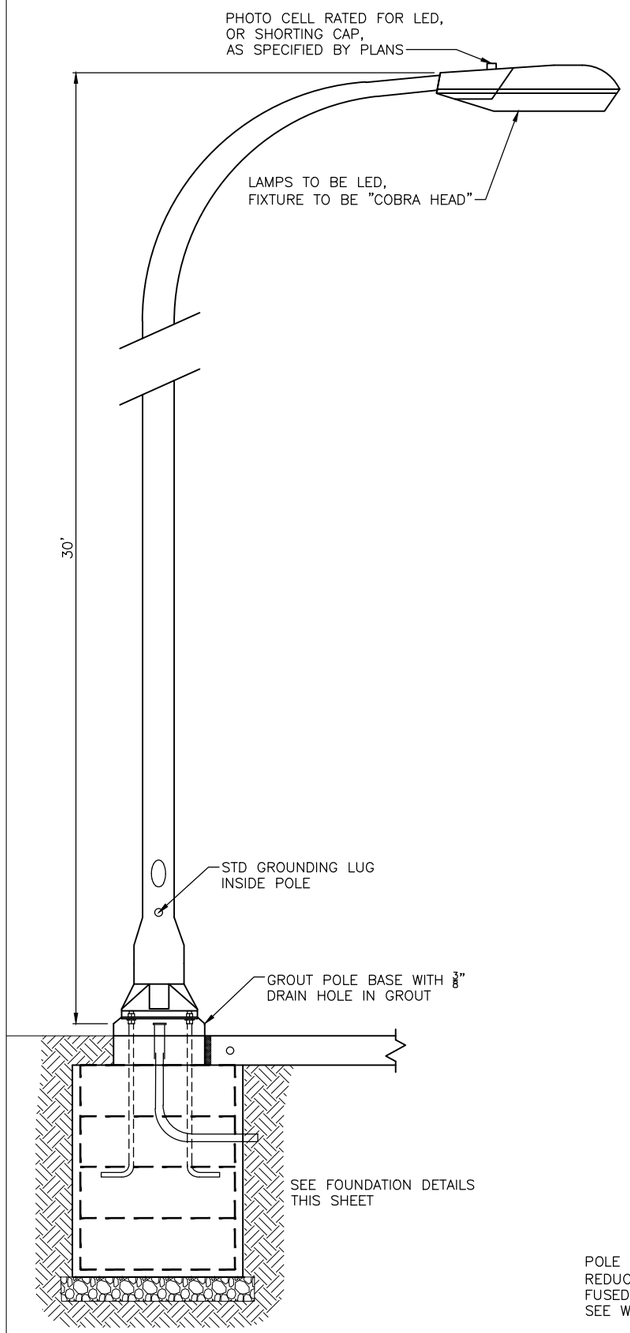

N.T.S.

FOUNDATION DETAIL:

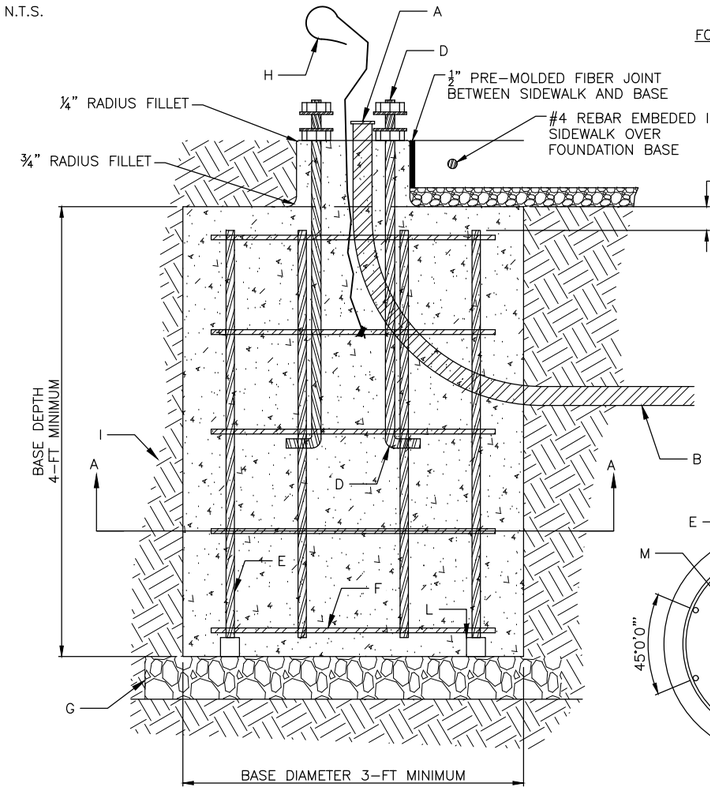

BASE DETAIL

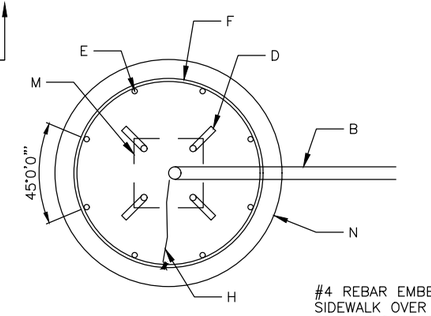

(A) SECTION A

FOR INSTALLATION IN PLANTER STRIP

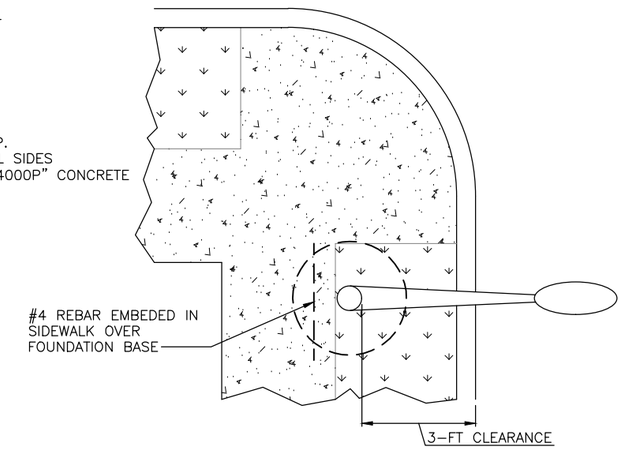

FOR INSTALLATION BEHIND SIDEWALK

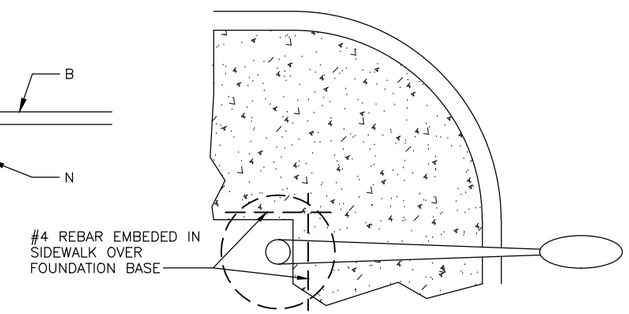

LED Streetlight Luminaire Ordering Information			
Manufacturer	**Product/Series**	**Distribution Type**	**Ordering Information**
Eaton Streetworks (use 7030 for 3K, 7040 for 4K)	Navion	II	NVN-AF-01-D-V-T2-10K-***7030***-1200-4N7-IP66-AP-K-QA/RA1013
		III	NVN-AF-02-D-V-T3-10K-***7030***-1A-4N7-IP66-AP-K-QA/RA1013
		IV	NVN-AF-01-D-V-T4-10K-***7030***-1200-4N7-IP66-AP-K-QA/RA1013
Philips Lumec (use 3K for 3K, 4K for 4K)	Roadfocus Medium	II	RFM-55W32LED***3K***-G2-R2M-UNV-DMG-FAWS-RCD7-PH9-GY3
		III	RFM-108W48LED***3K***-G2-R3M-UNV-DMG-FAWS-RCD7-PH9-GY3
		IV	RFM-55W32LED***3K***-G2-4-UNV-DMG-FAWS-RCD7-PH9-GY3
Leotek (use WW for 3K, NW for 4K)	Green Cobra Jr.	II (Collector)	GCJ2-20H-MV-***WW***-2R-GY-900-FFA-PCR7-WL-RWG-SC
	Green Cobra Jr.	II (Local Roads)	GCJ0-15H-MV-***WW***-2R-GY-700-FFA-PCR7-WL-RWG-SC
	Green Cobra M.	III	GCM2-30H-MV-***WW***-3R-GY-1A-FFA-PCR7-WL-RWG-SC
	Green Cobra Jr.	IV	GCJ0-15H-MV-***WW***-4-GY-700-FFA-PCR7-WL-RWG-SC

Notes:
3000K in color for all roads (except SR285 corridor)
4000k in color for SR285 corridor
Only one brand/type shall be used for entire project.
Type 2 Distribution for collectors & local roads
Type 3 Distribution for arterials
Type 4 Distribution for cul-de-sacs, mast arm to extend luminaire beyond curb by 5 FT min., align with center of radius, install cut-off screen for back lighting
New developments shall meet minimum illuminance values as set by AASHTO design standards in the "Roadway Lighting Design Guide", 2005

POLE AND BRACKET CABLE FOR LUMINAIRE WIRING #10 AWG AND # 10 'USE' GROUND WIRE
REDUCE WASHER W/ SE CONNECTOR FOR SECURING POLE AND BRACKET AT LUMINAIRE
FUSED QUICK DISCONNECTS AT TOP OF BASE ACCESSED VIA HANDHOLE IN POLE.
SEE WSDOT STANDARD PLAN J-28.70 FOR STEEL LIGHT STANDARD WIRING DETAILS

NOTE:
FOUNDATION SHALL BE CONSTRUCTED USING METHOD 1 OR METHOD 2 ACCORDING TO WSDOT STANDARD PLAN J-28.30 SHEET 2

FOUNDATION

A EXTEND 1 1/4" CONDUIT 2-IN MAX. ABOVE BASE WITH END BELL OR BUSHING AND OTHER END 2-FT-6-IN BELOW FINISH GRADE EXTENDED TO HAND HOLE. PROVIDE ADDITIONAL CONDUIT FOR COMMUNICATION OR SIGNAL CABLE WHERE SHOWN ON APPROVED DRAWINGS OR IDENTIFIED IN CONTRACT.

B 1 1/4" DIAM. SCHEDULE 80 PVC CONDUIT EMBEDDED IN BASE EXTENDED TO HAND HOLE.

C USE 1/2" PREMOLDED JOINT FILLER TO PREVENT BOND BETWEEN SIDEWALK AND BASE, AS SHOWN IN BASE DETAIL.

D (4) ANCHOR "J" BOLTS HOT DIPPED GALVANIZED (PER ASTM A-307) 1-IN DIAM X 3-FT-8-IN W/ 4-IN HOOK AT BOTTOM, 3-FT EMBEDDED IN BASE, AND 2 3/4-IN PROJECTING ABOVE GROUT PAD, W/ (2) HVY DUTY GALV. 1-IN N.C. HEX NUTS & (2) FLAT WASHERS EACH, BOLT PATTERN IS 11-IN DIAGONAL.

E (8) #7 X 3-FT-6-IN @ 45 DEGREE INTERVALS FROM CENTER

F (5) #4 X 2-FT-6-IN DIAM HOOPS @ 10 1/2-IN O.C. W/ 1-FT-9-IN LAPS

G WHEN USING METHOD 2 WSDOT STANDARD PLAN J-28.30 SHEET 2: COMPACTED LEVELING COURSE 2-IN COMPACTED DEPTH EXTENDED 6-IN BEYOND BASE ON COMPACTED SUBGRADE 95% STANDARD PROCTOR MINIMUM 6-IN MINIMUM COMPACTED DEPTH BELOW BASE

H ADD A GROUNDING CONDUCTOR CONNECTED TO FOUNDATION REBAR WITH NON-INSULATED #4 AWG STRANDED COPPER; PROVIDE 3-FT MIN. SLACK ABOVE BASE. ROUTE CONDUCTOR TO LUMINAIRE GROUNDING STUD. CLAMP CONDUCTOR TO STEEL REINFORCING BAR AT LEAST 12-IN BELOW TOP OF CONCRETE WITH LISTED CONNECTOR SUITABLE FOR USE EMBEDDED IN CONCRETE - THE FOUNDATION SHALL BE GROUNDED IN ACCORDANCE WITH THE REQUIREMENTS OF STANDARD SPECIFICATION 8-20.

I COMPACTED BACKFILL AROUND BASE TO 95% STANDARD PROCTOR MINIMUM, USING 8-IN LIFT THICKNESS MAXIMUM.

J STRIP ALL FORMS FROM AROUND BASE BEFORE BACKFILL. IF USING GALVANIZED CORRUGATED METAL PIPE IT SHALL REMAIN A MINIMUM OF 6" BELOW FINISHED GRADE AND DEEPER.

K WIRING DETAILS PER WSDOT STANDARD PLAN J-28.70 AND STANDARD SPECIFICATION 8-20.

L PRE-CAST CONCRETE BLOCK SPACERS ATTACHED TO REBAR (3 MIN) TO PROVIDE 3-IN CLEAR FROM VERTICAL BARS TO SOIL

M MONOLITHIC 12" SQUARE

N OUTER DIAMETER CONCRETE BASE

STANDARD DETAIL
LUMINAIRE
BASE, LIGHT, & POLE

City of Wenatchee

REVISIONS		
DATE	INITIAL	
5/11/2015	RDH	
11/2/2017	JBV	
1/28/2018	JBV	
4/24/2018	JBV	
01/01/2022	AJS	

SCALE: AS SHOWN
DESIGNED DMN
DRAWN JBV
APPROVED BY
DATE DRAWN 3/23/2015
CHECKED DMN
DATE APPROVED
STANDARD SPECIFICATIONS
2-09 STRUCTURE EXCAVATION
6-02 CONCRETE STRUCTURES
8-20 ILLUMINATION, TRAFFIC SIGNAL SYS.
9-29 ILLUMINATION, SIGNAL, ELECTRICAL

DETAIL NO.
R-800

PAGE
1 OF 1

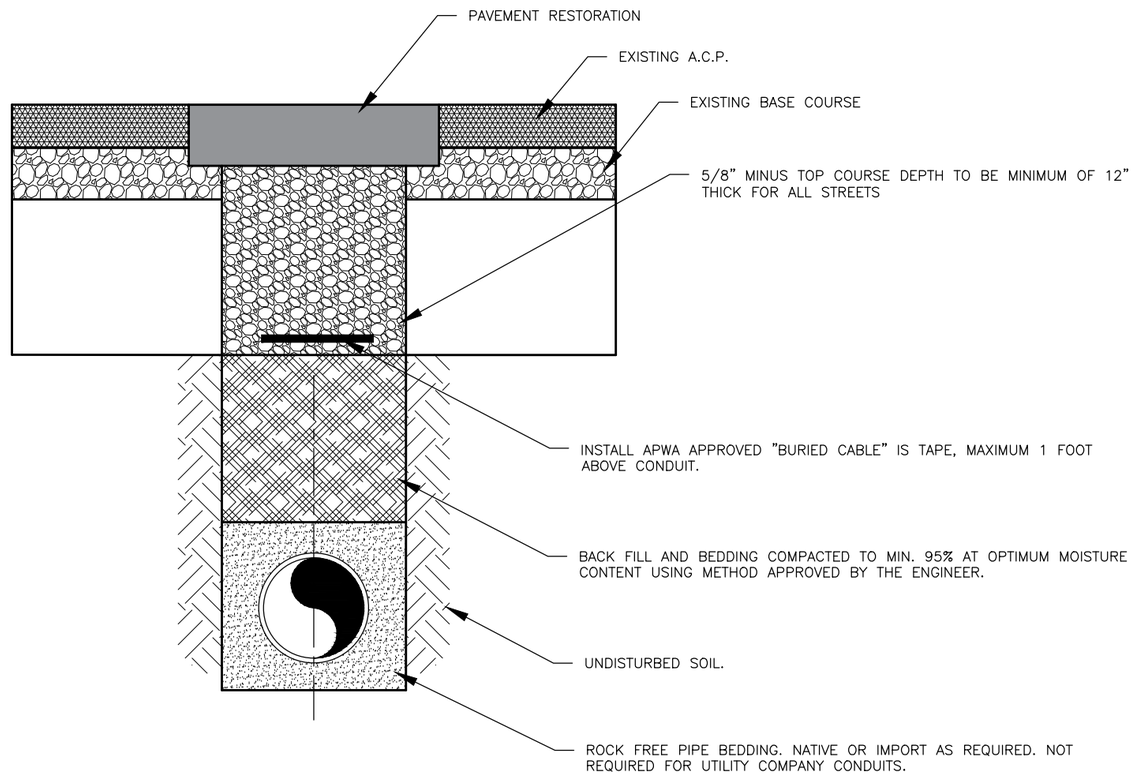

NOTES:

1. TRENCH DEPTH SHALL PROVIDE A MINIMUM COVER OF 24" OVER TOP OF CONDUIT.
   1.) G.T.E. AND P.U.D. TO BE MIN. 30" AT NON CURBED STREET CROSSINGS OR AS REQUIRED BY THE PERMIT.
2. MINIMUM ONE-WAY TRAFFIC TO BE MAINTAINED ACCORDING TO APPROVED TRAFFIC CONTROL PLAN.
3. ALL ROADWAY APPURTENANCES TO BE PROTECTED AND ROAD SIGNS LEFT AS FOUND.
4. PAVEMENT REPAIR TO BE MADE WITHIN 24 HOURS OF TRENCH BACKFILL.
5. PERMIT REQUIRED ON ALL PROJECTS, EXCEPT CONTRACT ADMINISTERED BY THE CITY ENGINEER DEPT. AND EXCEPT AS SPECIFIED BY SOME FRANCHISES.

STREET CUT AND PATCH DETAIL FOR TYPICAL TRAFFIC SIGNAL, STREET LIGHTING AND UTILITY COMPANY CONDUITS

STANDARD DETAIL
STREET LIGHT
CONDUIT CROSSING

City of Wenatchee

REVISIONS	
DATE	INITIAL
01/01/2022	AJS

SCALE: AS SHOWN N.A.
DATE DRAWN 3/23/2015
DESIGNED DMN
DRAWN RDH
CHECKED DMN
APPROVED BY
DATE APPROVED
STANDARD SPECIFICATIONS
2-09 STRUCTURE EXCAV.
9-29 ILLUMINATION MTL.

DETAIL NO.
R-810

PAGE
1 OF 1

CONDUIT IN PLANTER STRIP OR BACK OF CURB (NOT IN ROADWAY) SHALL BE SCHEDULE 40 PVC OR
SCHEDULE 80 HIGH DENSITY POLYETHYLENE (HDPE).

CONDUIT CROSSING ROADWAY OR UNDER ROADWAY SHALL BE SCH. 80 HDPE OR SCH. 80 PVC.

THE CONTRACTOR SHALL SECURE, AT HIS OWN EXPENSE, ALL ELECTRICAL PERMITS TO CONSTRUCT THE LIGHTING SYSTEM.

WIRE IN CONDUIT SHALL BE TYPE "USE".

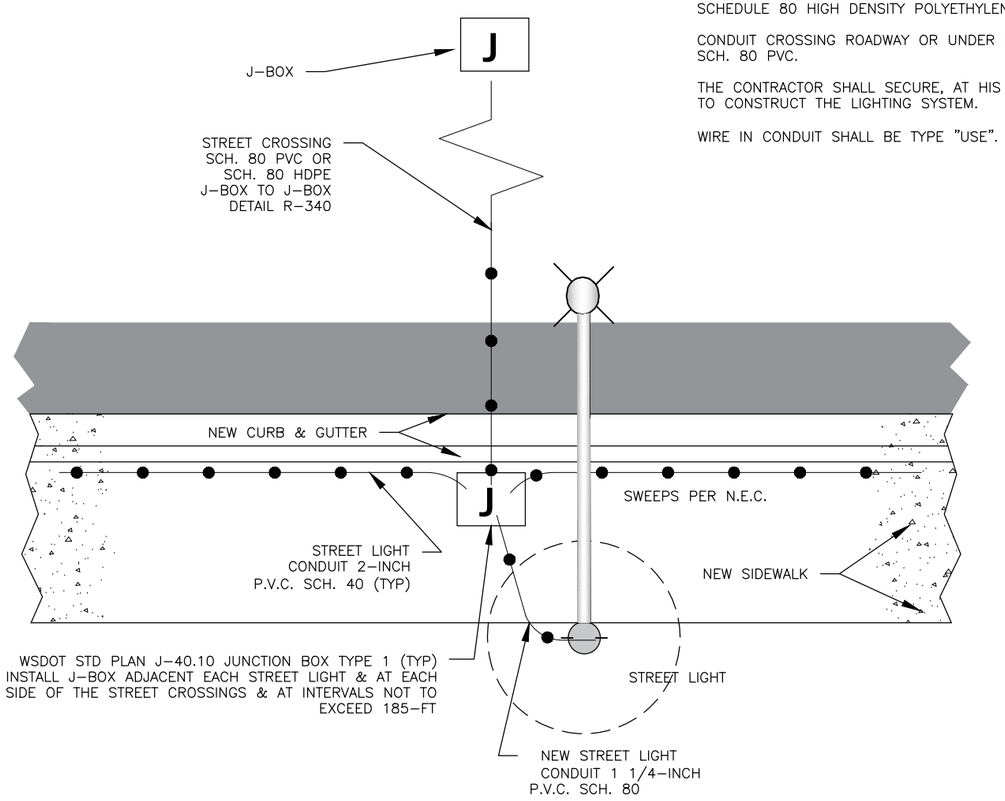

STREET LIGHT CONDUIT LOCATION

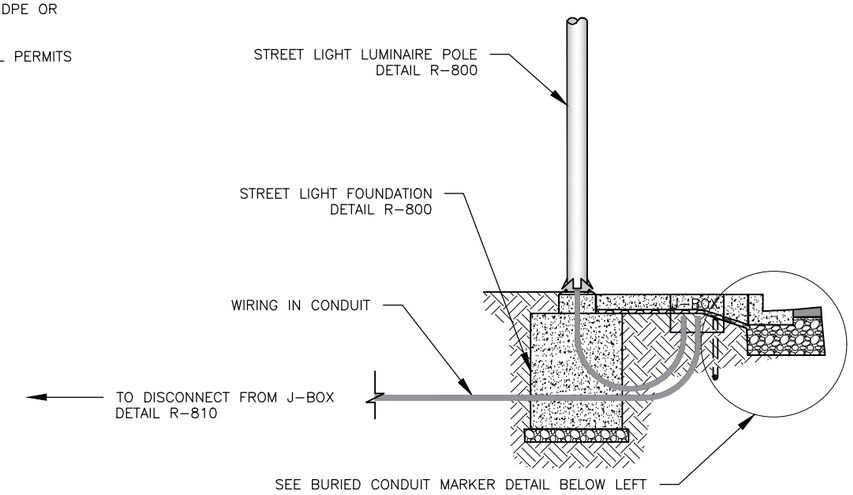

SECTION VIEW

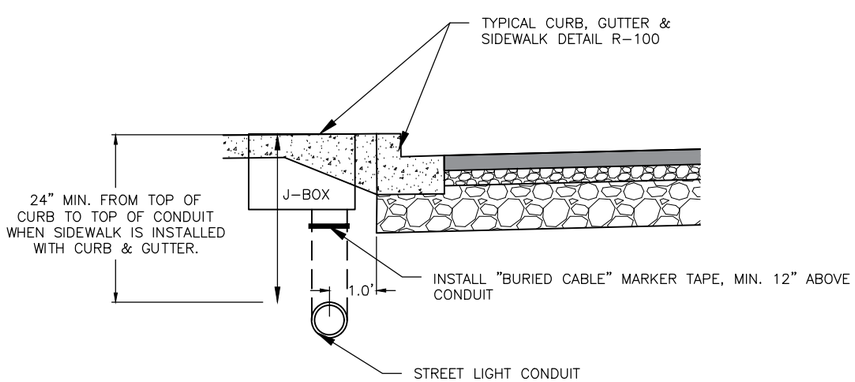

BURIED CONDUIT MARKER

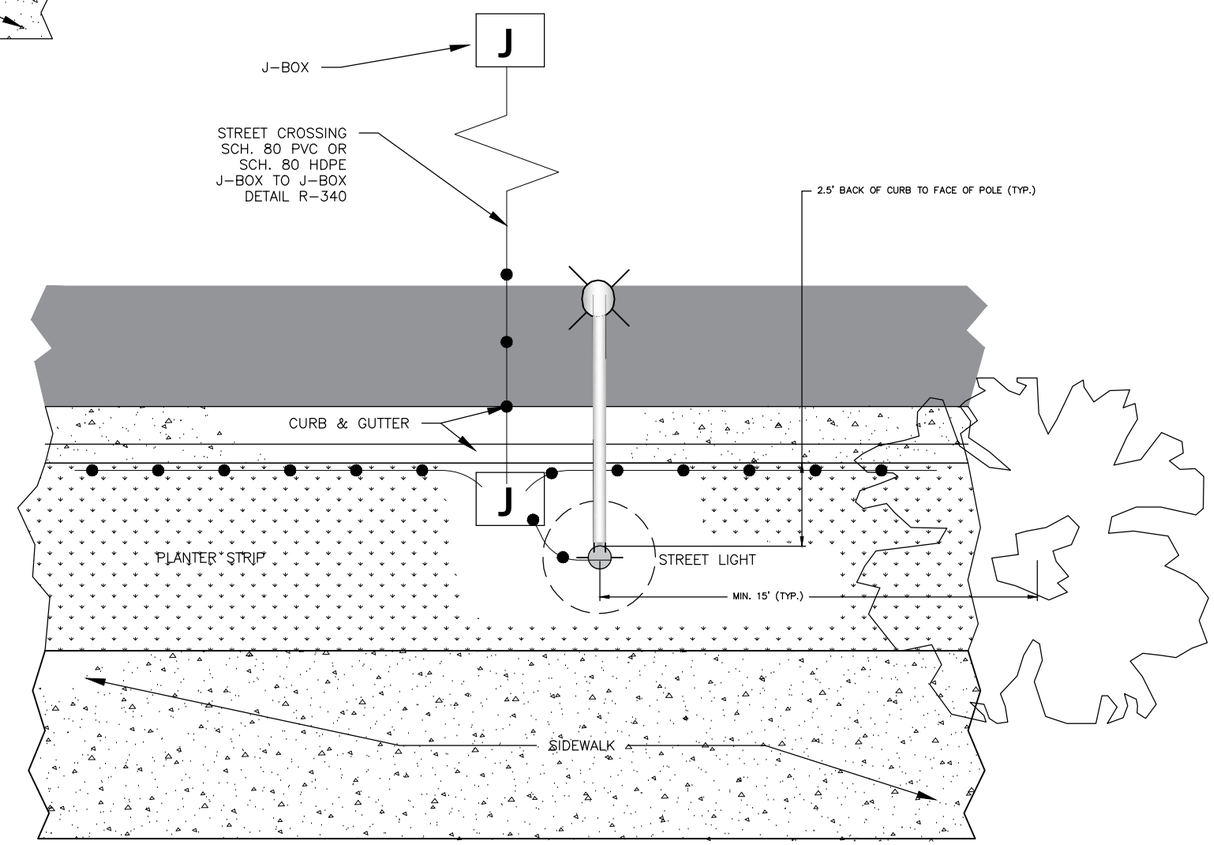

STREET LIGHT CONDUIT & J-BOX LOCATION IN PLANTER STRIP

JUNCTION BOX TYPE 1 PER WSDOT STD PLAN J-40.10
STREET LIGHT WIRING DETAILS PER WSDOT STD PLAN J-28.70
TYPICAL GROUNDING DETAILS PER WSDOT STD PLAN J-60.05

STANDARD DETAIL
CONDUIT LOCATION
STREET LIGHTING

City of Wenatchee

REVISIONS	DATE	INITIAL
	11/2/2017	JBV
	01/01/2022	AJS

DATE DRAWN	3/23/2015
CHECKED	DMN
DATE APPROVED	
SCALE: AS SHOWN N.A.	
DRAWN	RDH
DESIGNED	DMN
APPROVED BY	
STANDARD SPECIFICATIONS	8-20 ILLUMINATION 9-29 ILLUMINATION MTL.

DETAIL NO.
R-815

PAGE
1 OF 1

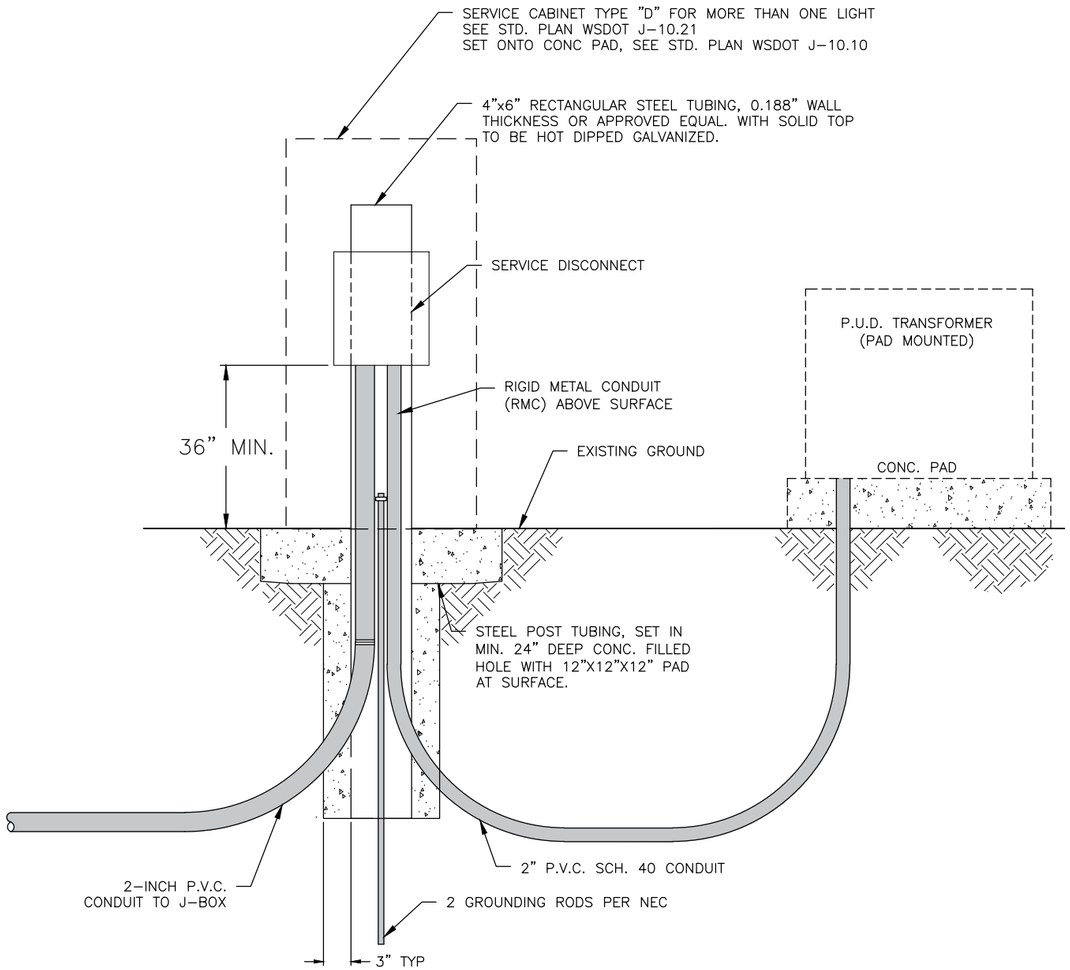

TYPICAL LIGHTING CONTROL PANEL FOR PUD TRANSFORMER PAD MOUNT

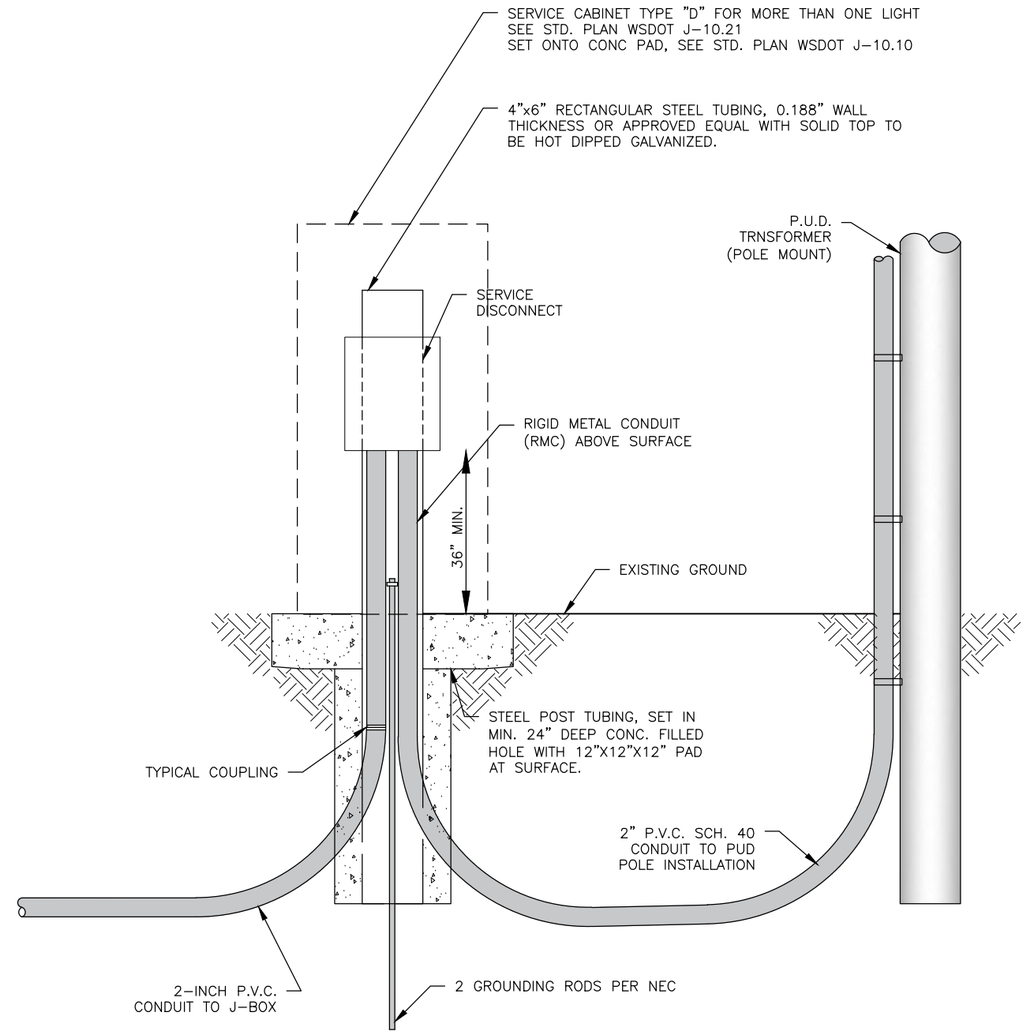

TYPICAL LIGHTING CONTROL PANEL FOR PUD TRANSFORMER POLE MOUNT

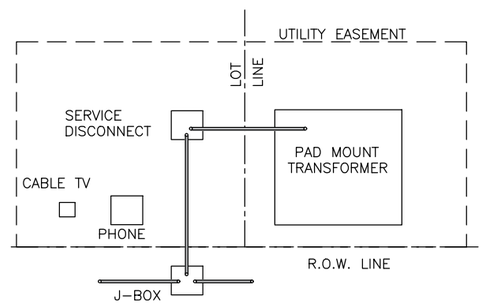

TYPICAL LOT CORNER LAYOUT

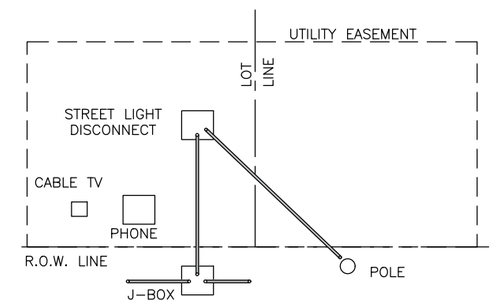

TYPICAL LOT CORNER LAYOUT

STANDARD DETAIL
SERVICE & CONTROL PANEL
STREET LIGHTING

City of Wenatchee

REVISIONS		
DATE	INITIAL	
03/26/2021	DMN	
01/01/2022	AJS	

SCALE: AS SHOWN N.A.	DESIGNED DMN	DRAWN RDH	DATE DRAWN 3/23/2015
	APPROVED BY		CHECKED DMN
			DATE APPROVED

STANDARD SPECIFICATIONS
8-20 ILLUMINATION

DETAIL NO.
R-820

PAGE
1 OF 1

ELEVATION

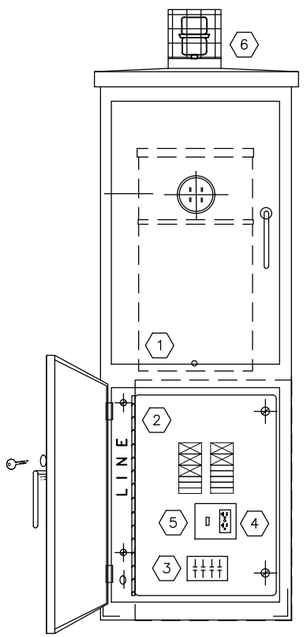

SECTION

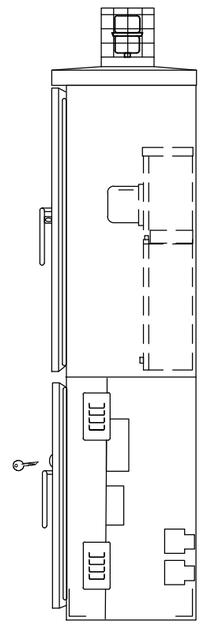

120/240VAC, 1 PHASE, 3 WIRE

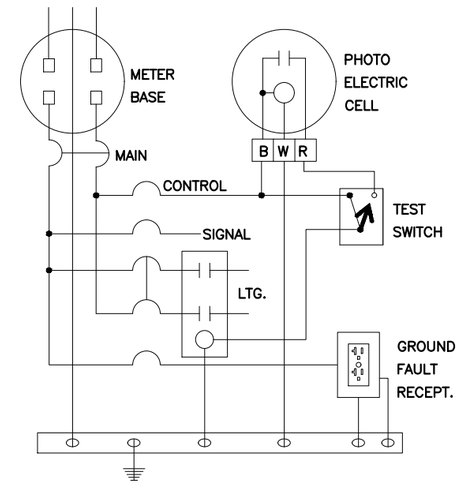

WIRING SCHEMATIC

COMPONENT SCHEDULE

1. METERBASE: 100 AMP, 4 JAW, B–LINE #114TB, SAFETY SOCKET TYPE, 5TH JAW KIT
2. PANELBOARD: 120/240 VAC, 100 AMP BUS, 1 PHASE, 3 WIRE, COPPER BUS, 18 CKT EATON
   100A 2 POLE MAIN BREAKER, BAB2100 (BACK–FED)
   EATON BAB BOLT–ON BREAKERS:
   - 2 – 20/2 ILLUMINATION BRANCH A, B
   - 1 – 50/1 SIGNAL BRANCH
   - 1 – 20/1 BRANCH, GFR
   - 1 – 15/1 BRANCH, CONTROL BRANCH
   - 11 – 1 POLE SPACE ONLY
3. CONTRACTOR: LIGHTING RATED, 30 AMP, 4 POLE, 120 VAC COIL:1 REQUIRED
4. DUPLEX RECEPTACLE, 120 VAC, GFI
5. PHOTO–CELL BYPASS SWITCH, SPST, 15 AMP, 277 VAC
6. PHOTO ELECTRIC CELL: 1800 WATT, 120 VAC, TWIST LOCK, ALR #SST–IES WITH 6"x6"x6" WIRE MESH GUARD.

NOTES:

1. SEE WSDOT STANDARD J.10.10 FOR BASE DETAILS.
2. SEE WSDOT STANDARD J.60.05 FOR GROUNDING DETAILS.

STANDARD DETAIL SERVICE CABINET FOR STREET LIGHTING

City of Wenatchee

REVISIONS	
DATE	INITIAL
09/07/2021	CAW

SCALE: AS SHOWN
DESIGNED
DRAWN CAW
APPROVED BY
DATE DRAWN 4/01/2020
CHECKED
DATE APPROVED
STANDARD SPECIFICATIONS

DETAIL NO.
R–830

PAGE
1 OF 1

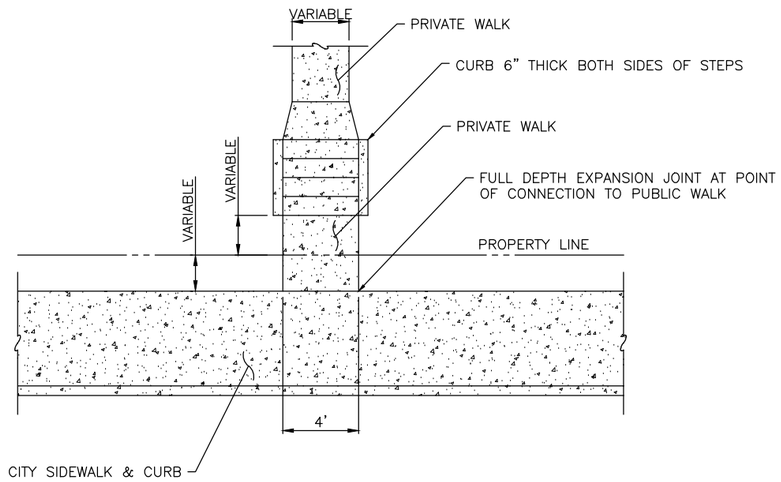

PLAN

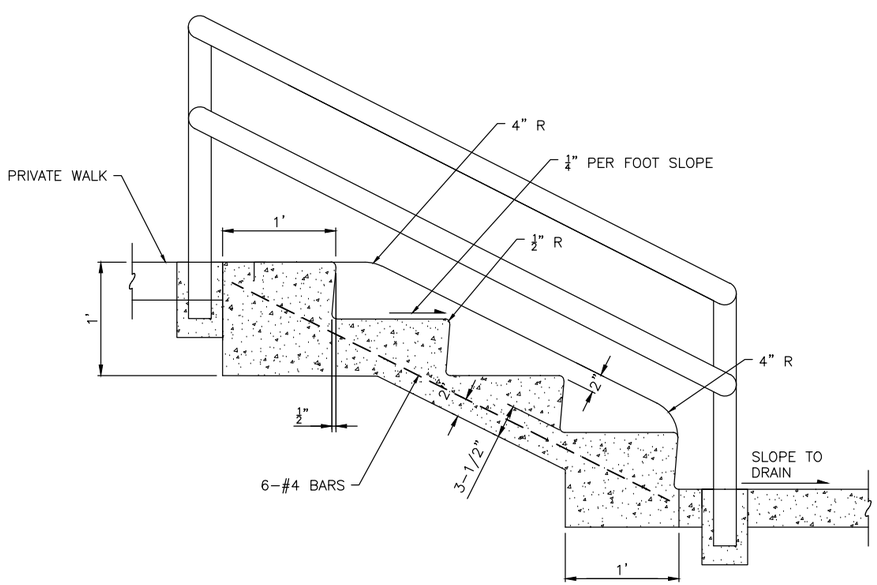

SECTION

NOTES:

1. STEPS SHALL BE 4'-0" WIDE, CURB TO CURB, PLUS 6" CURBS ON EACH SIDE.
2. CEMENT CONCRETE SHALL BE CLASS 4000 TROWEL FINISH.
3. NUMBER OF STEPS SHALL SUIT INDIVIDUAL CONDITIONS, WITH TREAD AND RISER DIMENSIONS TO SUIT THE GRADE.
4. RISERS SHALL BE 5" MINIMUM, 7" MAXIMUM:
   TREAD SHALL BE 11" MINIMUM, 12" MAXIMUM.
5. HANDRAIL REQUIRED ON BOTH SIDES PER BUILDING CODE STANDARDS.
6. HANDRAIL MAY NOT ENCROACH INTO PUBLIC SIDEWALK

STANDARD DETAIL CEMENT CONCRETE STEPS

City of Wenatchee

REVISIONS	
DATE	INITIAL
01/01/2022	AJS

SCALE: AS SHOWN	DATE DRAWN 0/23/2020
DESIGNED	DRAWN CAW
APPROVED BY	CHECKED
	DATE APPROVED
STANDARD SPECIFICATIONS	

DETAIL NO.
R-900

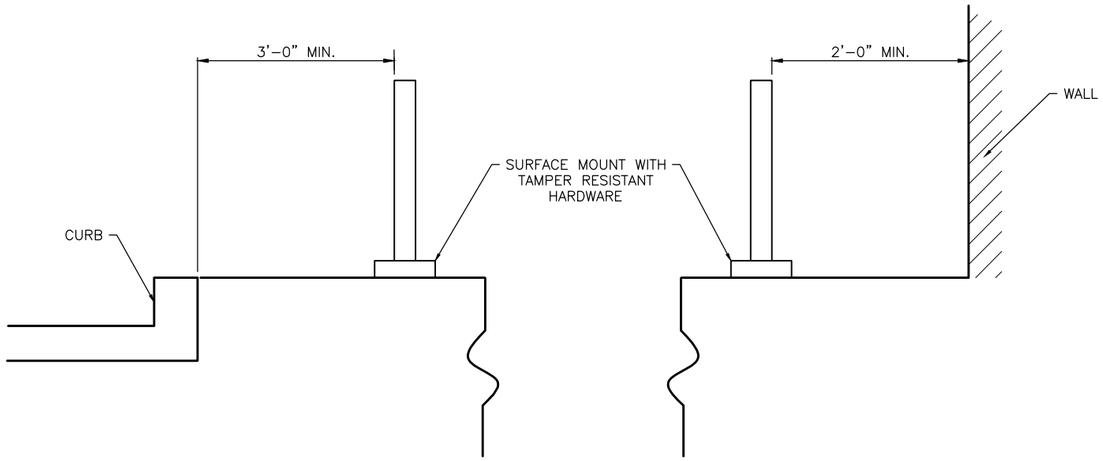

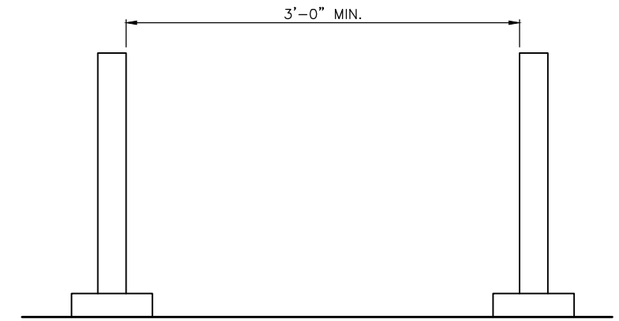

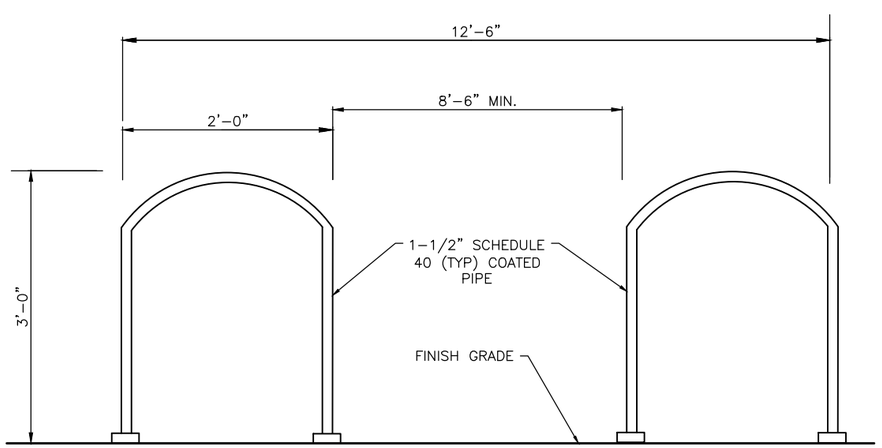

NOTES:

1. UNLESS OTHERWISE APPROVED, BICYCLE PARKING RACKS SHALL BE "INVERTED U TYPE" CYCLE-SAFE U/2 BLACK PLASTISOL COATED BY MANUFACTURER OR APPROVED EQUIVALENT. OTHER RACKS MAY BE ALLOWED BUT MUST MEET THE FOLLOWING FUNCTIONAL REQUIREMENTS:

   - SUPPORT THE FRAME OF A BICYCLE IN TWO PLACES AND PREVENT THE BICYCLE FROM TIPPING OVER.
   - ALLOW THE FRAME AND ONE WHEEL TO BE LOCKED TO THE RACK WHEN BOTH WHEELS ARE LEFT ON THE BIKE.
   - ALLOW THE FRAME AND BOTH WHEELS TO BE LOCKED TO THE RACK IF THE FRONT WHEEL IS REMOVED.
   - ALLOW THE USE OF EITHER A CABLE OR U-SHAPED LOCK.
   - BE SECURELY ANCHORED BY SURFACE MOUNT.
   - BE USABLE BY BIKES WITH NO KICKSTAND.
   - BE USABLE BY BIKES WITH WATER BOTTLE CAGES.
   - BE USABLE BY A WIDE VARIETY OF SIZES AND TYPES OF BICYCLES.
   - BE COATED BY MANUFACTURER

2. INSTALL PER MANUFACTURER'S RECOMENDATION.

STANDARD DETAIL
BICYCLE PARKING RACK

City of Wenatchee

REVISIONS	
DATE	INITIAL

SCALE: AS SHOWN	DATE DRAWN 10/09/2020		
DESIGNED	DRAWN CAW	CHECKED	DATE APPROVED
APPROVED BY		STANDARD SPECIFICATIONS	

DETAIL NO.
R-950