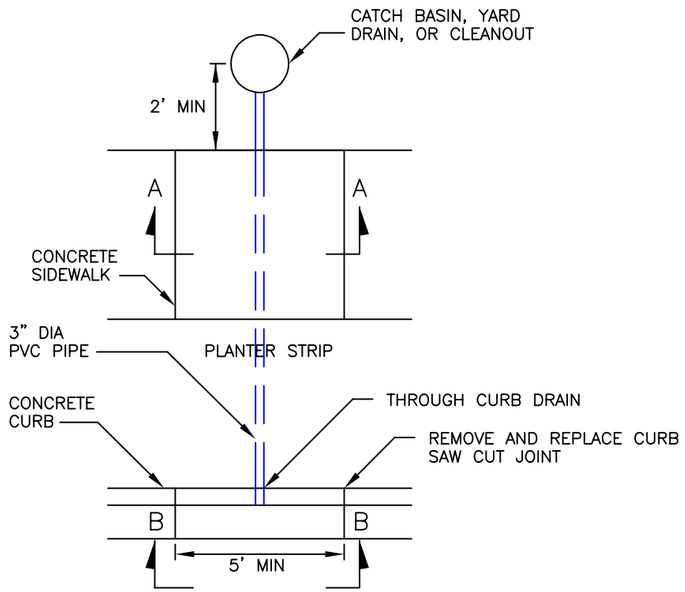

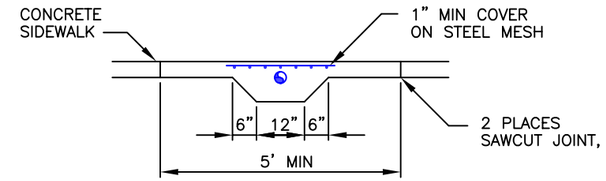

SECTION A–A

NTS

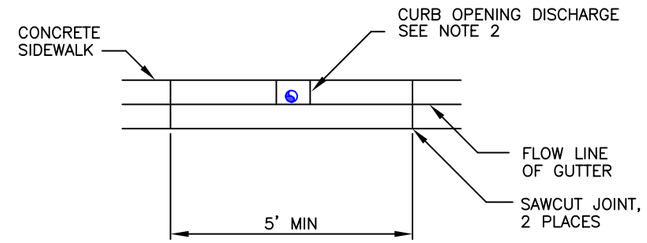

SECTION B–B

NTS

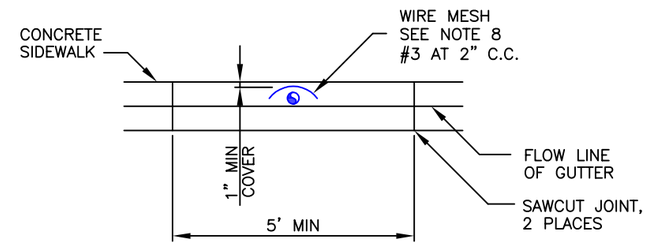

SECTION B–B (ALTERNATE)

NTS

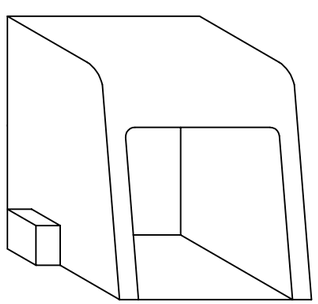

CURB DRAIN FRONT

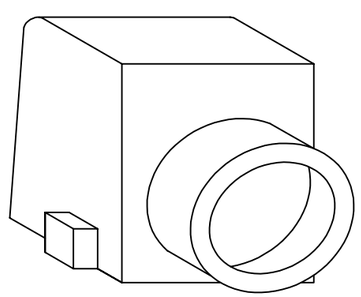

CURB DRAIN BACK

NOTES

1. PIPE SHALL BE 3" DIA PVC PLASTIC PIPE (SCH 40).
2. USE NEENAH FOUNDRY PRODUCT R–3262–3 OR EQUAL AS APPROVED BY CITY.
3. CEMENT CONCRETE SHALL BE CLASS B (3/4").
4. REINFORCING BAR SHALL BE #3 (3/8" DEFORMED BAR).
5. SIDEWALK AND CURBING MUST BE SAW–CUT AT A DUMMY JOINT OR REMOVED TO A FULL EXPANSION JOINT.
6. SIDEWALK THICKNESS OF 4" MINIMUM.
7. FULL DEPTH OF CURB AND GUTTER MUST BE REMOVED AND REPLACED.
8. WIRE MESH SHALL BE 3 X 3 10 GAUGE.
9. ALTERNATE TO BE USED ONLY WITH APPROVAL FROM CITY.
10. ONLY FOR USE IN AREAS WITHOUT EXISTING STORM SYSTEMS

STANDARD DETAIL RESIDENTIAL SIDEWALK DRAIN

City of Wenatchee

REVISIONS	
DATE	INITIAL

DATE DRAWN 12/11/2020

CHECKED

DATE APPROVED

SCALE: AS SHOWN

DESIGNED

DRAWN CAW

APPROVED BY

STANDARD SPECIFICATIONS

DETAIL NO.

D-310