CONTRACT DOCUMENTS
FOR THE CONSTRUCTION OF THE

WENATCHEE WASTEWATER TREATMENT PLANT IMPROVEMENTS

VOLUME 4 OF 4

DRAWINGS

CITY OF WENATCHEE
WASHINGTON

For Information Regarding This Project Contact:

KAREN A. HOOD
BELLEVUE, WASHINGTON
(206) 453-5000

CH2M HILL

NOVEMBER 1990

SEA24579.N1

DRAWN BY: DL CHRISINGER DESIGNED BY: J BROWN
DGN NAME: 0:/PROJ2/WENATCHE/WE010G-A.DGN

Copy 5

CITY OF WENATCHEE, WASHINGTON

WASTEWATER TREATMENT PLANT IMPROVEMENTS

LOCATION MAP

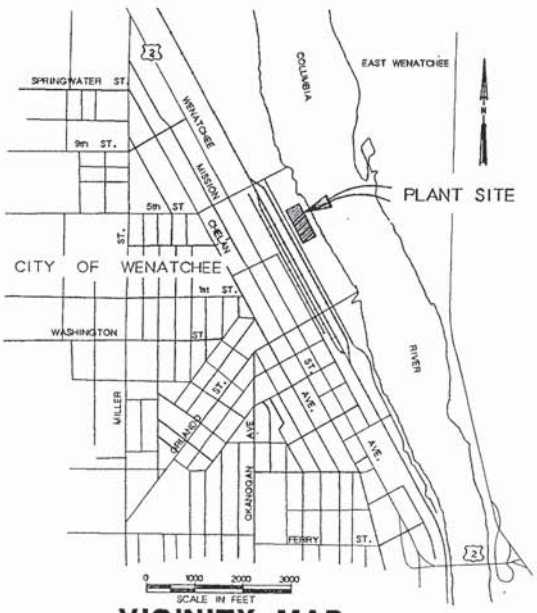

VICINITY MAP

TREATMENT PLANT SITE

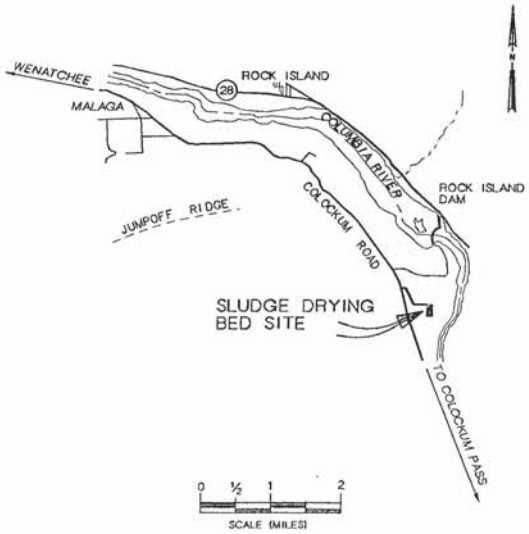

VICINITY MAP

SLUDGE DRYING BED SITE

KAREN A. HOOD — STATE OF WASHINGTON — REGISTERED PROFESSIONAL ENGINEER

CH2M HILL

DSGN	J BROWN
DR	J BROWN
CHK	K HOOD
APVD	K HOOD

NO.	DATE	REVISION	BY	APVD

REUSE OF DOCUMENTS
THIS DOCUMENT, AND THE IDEAS AND DESIGNS INCORPORATED HEREIN, AS AN INSTRUMENT OF PROFESSIONAL SERVICE, IS THE PROPERTY OF CH2M HILL AND IS NOT TO BE USED, IN WHOLE OR IN PART, FOR ANY OTHER PROJECT WITHOUT THE WRITTEN AUTHORIZATION OF CH2M HILL.
©CH2M HILL

VERIFY SCALE
BAR IS ONE INCH ON ORIGINAL DRAWING.
0 1"
IF NOT ONE INCH ON THIS SHEET, ADJUST SCALES ACCORDINGLY.

CITY OF WENATCHEE, WASHINGTON
WASTEWATER TREATMENT PLANT IMPROVEMENTS

GENERAL DRAWINGS
LOCATION AND VICINITY MAPS

DWG NO. 10-G-1
DATE NOV. 1990
PROJ. NO. SEA24579.N1

DATE: 11-7-90 DLC
DRAWN BY: DL CHRISINGER DESIGNED BY: K HOOD
DGN NAME: O:/PROJ2/WENATCHE/WE010G-B.DGN

DRAWING NUMBER	DRAWING TITLE
	GENERAL DRAWINGS
10-G-1	LOCATION AND VICINITY MAPS
10-G-2	INDEX TO DRAWING
10-G-3	ABBREVIATIONS
10-G-4	LIQUID/SOLIDS FLOW DIAGRAM AND BALANCE AND INFLUENT CHARACTERISTICS
10-G-5	DESIGN CRITERIA
10-G-6	DESIGN CRITERIA
10-G-7	HYDRAULIC PROFILE
10-G-8	GENERAL LEGENDS
10-G-9	GENERAL LEGENDS
	SITE DRAWINGS
20-C-1	SITE PLAN
20-C-2	GRADING PLAN
20-C-3	SITEWORK DETAILS
20-C-4	SITEWORK DETAILS
20-C-5	EXCAVATION PLAN AND SECTIONS
20-C-6	YARD PIPING
20-C-7	AREA PIPING PLAN
20-C-8	WATER, NONPOTABLE WATER AND MISCELLANEOUS PLUMBING PLAN
20-C-9	FINISH GRADING, LAWN AND IRRIGATION PLAN
20-C-10	PLANTING PLAN
20-C-11	PLANTING DETAILS
	HEADWORKS
50-A-1	ARCHITECTURAL ELEVATIONS
50-A-2	ARCHITECTURAL ROOF PLAN AND DETAILS
50-S-1	STRUCTURAL FOUNDATION PLAN
50-S-2	STRUCTURAL GROUND LEVEL AND ARCHITECTURAL FLOOR PLAN
50-S-3	STRUCTURAL ROOF PLAN
50-S-4	STRUCTURAL SECTIONS
50-S-5	STRUCTURAL SECTIONS
50-S-6	STRUCTURAL SECTIONS
50-M-1	MECHANICAL GROUND LEVEL PLAN
50-M-2	MECHANICAL LOWER LEVEL PLAN AND SECTIONS
50-M-3	MECHANICAL SECTIONS
50-M-4	MECHANICAL SECTIONS
50-M-5	MANUAL BAR SCREEN SECTIONS & DETAILS
50-M-6	MECHANICAL DETAILS
50-H-1	HVAC AND PLUMBING FLOOR PLAN
50-H-2	HVAC AND PLUMBING ROOF PLANS AND LOWER LEVEL PLAN
	PRIMARY CLARIFIER
60-S-1	PLAN AND SECTIONS
60-S-2	STRUCTURAL / MECHANICAL PLANS AND SECTIONS
60-M-1	STRUCTURAL AND MECHANICAL PLAN, SECTIONS AND DETAILS
	WAS PUMPING FACILITY MODIFICATIONS
70-M-1	MECHANICAL PLAN AND DETAIL
	BLOWER BUILDING MODIFICATIONS
75-M-1	MODIFICATIONS W1 SYSTEM PLAN AND DETAILS
	SOLIDS HANDLING FACILITY
80-A-1	ARCHITECTURAL ELEVATIONS
80-A-2	ARCHITECTURAL ROOF PLAN AND DETAILS
80-S-1	ANAEROBIC DIGESTER FOUNDATION & ROOF PLANS
80-S-2	ANAEROBIC DIGESTER SECTIONS AND DETAILS
80-S-3	STRUCTURAL DETAILS
80-S-4	STRUCTURAL/ARCH. FOUNDATION AND BASEMENT FLOOR PLAN
80-S-5	STRUCTURAL/ARCHITECTURAL GROUND LEVEL FLOOR PLAN
80-S-6	STRUCTURAL AND ARCHITCTURAL UPPER LEVEL FLOOR PLAN
80-S-7	STRUCTURAL ROOF FRAMING PLAN
80-S-8	STRUCTURAL SECTION
80-S-9	STRUCTURAL SECTIONS
80-S-10	STRUCTURAL SECTIONS
80-S-11	STRUCTURAL SECTIONS AND DETAILS
80-S-12	STRUCTURAL SECTIONS AND DETAILS
80-S-13	BEAM SCHEDULE

DRAWING NUMBER	DRAWING TITLE
	SOLIDS HANDLING FACILITY (CONT)
80-M-1	DEMOLITION AND INTERIM SLUDGE LOADING STATION
80-M-2	ANAEROBIC DIGESTER MECHANICAL PLANS
80-M-3	ANAEROBIC DIGESTERS PLAN, SECTION AND DETAILS
80-M-4	LOWER LEVEL MECHANICAL PLAN
80-M-5	GROUND LEVEL MECHANICAL PLAN
80-M-6	UPPER LEVEL MECHANICAL PLAN
80-M-7	MECHANICAL SECTION
80-M-8	MECHANICAL SECTION
80-M-9	MECHANICAL SECTIONS
80-M-10	MECHANICAL SECTIONS
80-M-11	MECHANICAL SECTIONS
80-M-12	MECHANICAL SECTIONS
80-M-13	MECHANICAL DETAILS
80-M-14	MECHANICAL DETAILS
80-P-1	LOWER LEVEL PLUMBING PLAN
80-P-2	GROUND LEVEL PLUMBING PLAN
80-P-3	UPPER LEVEL PLUMBING PLAN
80-H-1	LOWER LEVEL HVAC PLAN
80-H-2	GROUND LEVEL HVAC PLAN
80-H-3	UPPER LEVEL HVAC PLAN
	COVERED STORAGE BUILDING MODIFICATIONS
90-A-1	ARCHITECTURAL PLAN, SECTION, AND DETAILS
	ADMINISTRATION BUILDING MODIFICATIONS
100-A-1	ARCHITECTURAL ELEVATIONS
100-A-2	ARCHITECTURAL FLOOR PLAN AND DETAILS
100-A-3	ARCHITECTURAL SECTIONS AND DETAILS
100-A-4	ARCHITECTURAL ROOF PLAN AND SECTIONS
100-A-5	ARCHITECTURAL DETAILS
100-A-6	ARCHITECTURAL INTERIOR ELEVATIONS
100-S-1	STRUCTURAL FOUNDATION PLAN AND ROOF PLAN
100-S-2	STRUCTURAL SECTIONS AND DETAILS
100-P-1	PLUMBING PLAN AND DETAILS
100-H-1	HVAC PLAN AND DETAILS
	STANDARD DETAILS
250-D-1	ARCHITECTURAL STANDARD DETAILS
250-D-2	ARCHITECTURAL STANDARD DETAILS
250-D-3	ARCHITECTURAL STANDARD DETAILS
250-D-4	ARCHITECTURAL STANDARD DETAILS
250-D-5	ARCHITECTURAL STANDARD DETAILS
250-D-6	STRUCTURAL STANDARD DETAILS
250-D-7	STRUCTURAL STANDARD DETAILS
250-D-8	STRUCTURAL STANDARD DETAILS
250-D-9	STRUCTURAL STANDARD DETAILS
250-D-10	STRUCTURAL STANDARD DETAILS
250-D-11	STRUCTURAL STANDARD DETAILS
250-D-12	MECHANICAL STANDARD DETAILS
250-D-13	MECHANICAL STANDARD DETAILS
250-D-14	MECHANICAL STANDARD DETAILS
250-D-15	MECHANICAL STANDARD DETAILS
250-D-16	MECHANICAL STANDARD DETAILS
250-D-17	HVAC STANDARD DETAILS
250-D-18	HVAC STANDARD DETAILS
250-D-19	PLUMBING STANDARD DETAILS
250-D-20	I & C INSTALLATION DETAILS
250-D-21	I & C INSTALLATION DETAILS
250-D-22	MECHANICAL STANDARD DETAILS

DRAWING NUMBER	DRAWING TITLE
	INSTRUMENTATION AND CONTROL
300-N-1	LEGEND AND NOTES
300-N-2	PROCESS INTERFACE SUMMARY
300-N-3	HEADWORKS P & ID
300-N-4	PRIMARY CLARIFICATION P & ID
300-N-5	SOLIDS HANDLING FACILITY SLUDGE TRANSFER P & ID
300-N-6	SOLIDS HANDLING FACILITY THICKENING & DEWATERING P & ID
300-N-7	SOLIDS HANDLING FACILITY POLYMER FEED SYSTEM P & ID
300-N-8	SOLIDS HANDLING FACILITY DIGESTER GAS SYSTEM P & ID
300-N-9	SOLIDS HANDLING FACILITY DIGESTER HOT WATER SYSTEM P & ID
300-N-10	CONTROL SYSTEM BLOCK DIAGRAM
300-N-11	HEADWORKS CONTROL PANEL ELEVATION AND SCHEDULE
300-N-12	HEADWORKS CONTROL PANEL ELEMENTARY DIAGRAM
300-N-13	HEADWORKS CONTROL PANEL ELEMENTARY DIAGRAM
300-N-14	HEADWORKS CONTROL PANEL ELEMENTARY DIAGRAM
300-N-15	HEADWORKS CONTROL PANEL ELEMENTARY DIAGRAM
300-N-16	HEADWORKS CONTROL PANEL ELEMENTARY DIAGRAM
300-N-17	SLUDGE CONTROL PANEL ELEVATION
300-N-18	SLUDGE CONTROL PANEL SCHEDULES
300-N-19	SLUDGE CONTROL PANEL SCHEDULES
300-N-20	SLUDGE CONTROL PANEL ELEMENTARY DIAGRAM
300-N-21	SLUDGE CONTROL PANEL ELEMENTARY DIAGRAM
300-N-22	SLUDGE CONTROL PANEL ELEMENTARY DIAGRAM
300-N-23	SLUDGE CONTROL PANEL ELEMENTARY DIAGRAM
300-N-24	SLUDGE CONTROL PANEL ELEMENTARY DIAGRAM
300-N-25	SLUDGE CONTROL PANEL ELEMENTARY DIAGRAM
300-N-26	SLUDGE CONTROL PANEL ELEMENTARY DIAGRAM
300-N-27	SLUDGE CONTROL PANEL ELEMENTARY DIAGRAM
300-N-28	SLUDGE CONTROL PANEL ELEMENTARY DIAGRAM
300-N-29	SLUDGE CONTROL PANEL ELEMENTARY DIAGRAM
300-N-30	SLUDGE CONTROL PANEL ELEMENTARY DIAGRAM
300-N-31	LP-8080 ELEVATION AND SCHEDULE
300-N-32	LP-8080 ELEMENTARY DIAGRAM
300-N-33	LP-8080 ELEMENTARY DIAGRAM
300-N-34	LP-8090 ELEVATION AND SCHEDULE
300-N-35	LP-8090 ELEMENTARY DIAGRAM
300-N-36	LP-8090 ELEMENTARY DIAGRAM
300-N-37	MODIFICATIONS TO EXISTING POP ELEVATION
300-N-38	EXISTING POP CONTROL PANEL ELEMENTARY DIAGRAM
300-N-39	EXISTING POP CONTROL PANEL ELEMENTARY DIAGRAM
300-N-40	EXISTING POP CONTROL PANEL ELEMENTARY DIAGRAM
300-N-41	EXISTING POP CONTROL PANEL ELEMENTARY DIAGRAM
300-N-42	TYPICAL LOOP DIAGRAM
300-N-43	TYPICAL FIELD CONNECTION DIAGRAM
	ELECTRICAL
400-E-1	ELECTRICAL LEGEND AND ABBREVIATIONS
400-E-2	ELECTRICAL & (I & C) SITE PLAN
400-E-3	DISTRIBUTION SYSTEM ONE LINE DIAGRAM
400-E-4	MOTOR CONTROL CENTERS MCC-3 & MCC-3E - ONE LINE DIAGRAMS
400-E-5	MOTOR CONTROL CENTER MCC-4 ONE LINE DIAGRAM
400-E-6	HEADWORKS - LIGHTING PLAN
400-E-7	HEADWORKS - POWER PLAN
400-E-8	BLOWER BLDG ELECTRICAL MODIFICATIONS
400-E-9	ADMINISTRATION BLDG & SLUDGE RECIRC PS ELECTRICAL PLAN
400-E-10	SOLIDS HANDLING FACILITY - LOWER LEVEL LIGHTING PLAN
400-E-11	SOLIDS HANDLING FACILITY - LOWER LEVEL POWER PLAN
400-E-12	SOLIDS HANDLING FACILITY - GROUND LEVEL LIGHTING PLAN
400-E-13	SOLIDS HANDLING FACILITY - GROUND LEVEL POWER PLAN
400-E-14	SOLIDS HANDLING FACILITY - UPPER LEVEL LIGHTING PLAN
400-E-15	SOLIDS HANDLING FACILITY - UPPER LEVEL POWER PLAN
400-E-16	ELEMENTARY DIAGRAMS
400-E-17	ELEMENTARY DIAGRAMS
400-E-18	ELEMENTARY DIAGRAMS
400-E-19	LUMINAIRE SCHEDULE
400-E-20	ELECTRICAL DETAILS
400-E-21	ELECTRICAL DETAILS
400-E-22	STANDARD DETAILS
	SLUDGE DRYING BEDS
800-B-1	ACCESS ROAD PLAN AND PROFILE
800-B-2	SITE AND GRADING PLAN
800-B-3	SITE AND DRAINAGE DETAILS
800-B-4	POND SECTION AND DETAILS
800-B-5	STRUCTURAL SECTIONS AND DETAILS

KAREN A. HOOD — STATE OF WASHINGTON — REGISTERED PROFESSIONAL ENGINEER

CH2M HILL

DSGN	D CHRISINGER
DR	D CHRISINGER
CHK	K HOOD
APVD	K HOOD

NO.	DATE	REVISION	BY	APVD

REUSE OF DOCUMENTS

THIS DOCUMENT, AND THE IDEAS AND DESIGNS INCORPORATED HEREIN, AS AN INSTRUMENT OF PROFESSIONAL SERVICE, IS THE PROPERTY OF CH2M HILL AND IS NOT TO BE USED, IN WHOLE OR IN PART, FOR ANY OTHER PROJECT WITHOUT THE WRITTEN AUTHORIZATION OF CH2M HILL.

©CH2M HILL

BAR IS ONE INCH ON ORIGINAL DRAWING. 0 — 1" IF NOT ONE INCH ON THIS SHEET, ADJUST SCALES ACCORDINGLY.

CITY OF WENATCHEE, WASHINGTON

WASTEWATER TREATMENT PLANT IMPROVEMENTS

GENERAL DRAWINGS

INDEX TO DRAWINGS

DWG NO. 10-G-2
DATE NOV. 1990
PROJ NO. SEA24579.N1

DATE: 11-6-90 DLC
DRAWN BY: D CHRISINGER DESIGNED BY: K HOOD
DGN NAME: G:/PROJ2/WENATCHE/WE010G-C.DGN

ABBREVIATIONS

@	AT
AAD	AUTOMATIC CONTROL AIR DAMPER
AB	ANCHOR BOLT
ABDN	ABANDONED
ACBD	ACOUSTICAL BOARD
ACC	AIR COOLED COMPRESSOR/CONDENSING UNIT
ACST	ACOUSTICAL TILE
ACT	ACOUSTICAL
AD	AREA DRAIN
ADDL	ADDITIONAL
ADJ	ADJACENT
AFF	ABOVE FINISHED FLOOR
AHR	ANCHOR
AL	ALUMINUM
ALTN	ALTERNATE
ANOD	ANODIZED
APPROX	APPROXIMATE
APVD	APPROVED
ARCH	ARCHITECTURAL
ASSY	ASSEMBLY
ASU	CENTRAL STATION AIR HANDLING UNIT
AVG	AVERAGE
B	BOILER
BC	BOOSTER COIL
BD	BOARD
BETW	BETWEEN
BF	BOTTOM FACE
BLDG	BUILDING
BM	BEAM
BOD	BOTTOM OF DUCT
BOD_5	BIOCHEMICAL OXYGEN DEMAND (5 DAY TEST)
BOP	BOTTOM OF PIPE
BOT	BOTTOM
BRG	BEARING
CAB.	CABINET
CAF	CABINET FAN
CARP.	CARPET
CB	CATCH BASIN
CC	COOLING COIL
CEF	CEILING EXHAUST FAN
CEM PLAS	CEMENT PLASTER
CF	CENTRIFUGAL FAN
CFM	CUBIC FEET PER MINUTE
CG	CORNER GUARD
CH	COAT HOOK
CHEM	CHEMICAL
CHKD	CHECKERED
CJ	CONSTRUCTION JOINT
℄	CENTER LINE
CI	CAST IRON
CL	CLOSET
CLG	CEILING
CLR	CLEAR
CMP	CORRUGATED METAL PIPE
CMU	CONCRETE MASONRY UNITS
CO	CLEANOUT
COL	COLUMN
COMM	COMMUNICATION
CONC	CONCRETE
CONN	CONNECTION
CONST	CONSTRUCTION
CONT	CONTINUOUS
CONT JT	CONTROL JOINT
COR	CORNER
CP	CONCRETE PIPE
CPLG	COUPLING
CT	CERAMIC TILE
CPVC	CHLORINATED POLYVINYL CHLORIDE
C TO C	CENTER TO CENTER
CTR	CENTER
CTRD	CENTERED
CU FT	CUBIC FEET
CUH	CABINET UNIT HEATER
Δ	CENTRAL ANGLE
CY/D	CUBIC YARDS PER DAY
DBA	DEFORMED BAR ANCHOR
DBL	DOUBLE
DET	DETAIL
DH	DEHUMIDIFIER
DIA	DIAMETER
DIAG	DIAGONAL
DIM	DIMENSION
DIP	DUCTILE IRON PIPE
DIR	DIRECTION
DISCH	DISCHARGE
DN	DOWN
DRWR	DRAWER
DS	DOWNSPOUT
DWG	DRAWING
DWL	DOWEL
E	EAST
E	EXTERNAL
EA	EACH
ECC	ECCENTRIC
EDH	ELECTRIC DUCT HEATER
EF	EACH FACE
EFL	EFFLUENT
EL	ELEVATION
ELB	ELBOW
ELEC	ELECTRICAL
EQL	EQUAL
EQL SP	EQUALLY SPACED
EQPT	EQUIPMENT
EW	EACH WAY
EWC	ELECTRIC WATER COOLER
EXF	EXHAUST FAN
EXP JT	EXPANSION JOINT
EXT	EXTERIOR
EXST	EXISTING
FAB	FABRICATION
FACIL	FACILITY
FB	FLAT BAR
FCO	FLOOR CLEANOUT
FCTY.FACT.	FACTORY
FD	FLOOR DRAIN
FDN	FOUNDATION
FEXT	FIRE EXTINGUISHER
F FL EL	FINISHED FLOOR ELEVATION
FLL	FLOW LINE ELEVATION
FLEX	FLEXIBLE
FLG	FLANGE
FLR	FLOOR
FNSH	FINISH
FP	FIN TUBE CONVECTOR
FR	FIRE RATED
FRP	FIBERGLASS REINFORCED PLASTIC
FTG	FOOTING
FVNR	FULL VOLTAGE NON-REVERSING
FVR	FULL VOLTAGE REVERSING
GA	GAUGE
GAL	GALLON
GALV	GALVANIZED
GALVS	GALVANIZED STEEL
GB	GRAB BAR
GPD	GALLONS PER DAY
GVL	GRAVEL
GWB	GYPSUM WALLBOARD
GYP PLAS	GYPSUM PLASTER
H.A.S	HEADED ANCHOR STUD
HC	HEATING COIL
HCR	HAT & COAT RACK
HD	HUB DRAIN
HDNR	HARDENER
HDR	HEADER
HGT	HEIGHT
HM	HOLLOW METAL
HORIZ	HORIZONTAL
HR	HOUR
HVAC	HEATING, VENTILATING, & AIR CONDITIONING
HWP	HOT WATER PUMP
HX	HEAT EXCHANGER
I&C	INSTRUMENTATION AND CONTROL
ID	INSIDE DIAMETER
IF	INSIDE FACE
IG	INSULATING GLASS
INFL	INFLUENT
INSTL	INSTALL
INSUL	INSULATION
INVT	INVERT
ITG	INSULATED TEMPERED GLASS
JAN.	JANITOR
JT	JOINT
KVA	KILOVOLT-AMPERE
L	LENGTH OF CURVE
∠	ANGLE
LAV	LAVATORY
LB	POUNDS
LB/D	POUNDS PER DAY
LCP	LOCAL CONTROL PANEL
LCUS	LOAD CENTER UNIT SUBSTATION
LG	LONG
LIW	LOAD INDICATING WASHERS
LLV	LONG LEG VERTICAL
LNTL	LINTEL
LONG	LONGITUDINAL
LOS	LOCKOUT STOP PUSHBUTTON
LR	LONG RADIUS
LT	LIGHT
LV	LABORATORY VACUUM
LV	LOW VOLTAGE
M & BH	MOP & BROOM HOLDER
MATL	MATERIAL
MAX	MAXIMUM
MB	MACHINE BOLT
MCC	MOTOR CONTROL CENTER
MD	MOTORIZED DAMPER
MECH	MECHANICAL
MFR	MANUFACTURER
MGD	MILLION GALLONS PER DAY
MG/L	MILLIGRAMS PER LITRE
MH	MANHOLE
MIN	MINIMUM
MIR	MIRROR
MISC	MISCELLANEOUS
MJ	MECHANICAL JOINT
MLSS	MIXED LIQUOR SUSPENDED SOLIDS
MLVSS	MIXED LIQUOR VOLATILE SUSPENDED SOLIDS
MO	MONTH
MO	MASONARY OPENING
MON	MONUMENT
MTG	MOUNTING
MTL	METAL
MTRG	METERING
N	NORTH
NIC	NOT IN CONTRACT
NO.	NUMBER
NOM	NOMINAL
NORM	NORMAL
NTS	NOT TO SCALE
NV	NAPKIN VENDOR
OC	ON CENTER
OD	OUTSIDE DIAMETER, OVERFLOW DRAIN
OF	OUTSIDE FACE
O/H	OVERHEAD
OPNG	OPENING
OPP	OPPOSITE
O TO O	OUT TO OUT
OZ.	OUNCE
P&ID	PROCESS AND INSTRUMENTATION DIAGRAM
PBX	PULL BOX
PC	POINT OF CURVATURE
P/C	PRIMARY CLARIFIERS
PE	PLAIN END
PF	PROPELLER FAN
PH	PHASE
PI	POINT OF INTERSECTION
PJF	PREMOLDED JOINT FILLER
ℙ	PROPERTY LINE
PL	PLATE
PLAM	PLASTIC LAMINATE
PLAS	PLASTER
PLYWD	PLYWOOD
POC	POINT ON CURVE
POT	POINT ON TANGENT
PR	PAIR
PRCST	PRECAST
PS	PUMP STATION
PSF	POUNDS PER SQUARE FOOT
PSI	POUNDS PER SQUARE INCH
PT	POINT OF TANGENCY
PTD	PAPER TOWEL DISPENSER
PTD/R	PAPER TOWEL DISPENSER/RECPTACLE
PVC	POINT OF VERTICAL CURVATURE
PVC	POLYVINYL CHLORIDE
PVI	POINT OF VERTICAL INTERSECTION
PVMT	PAVEMENT
PVT	POINT OF VERTICAL TANGENCY
QDRNT	QUADRANT
R	R-VALUE (INSULATION)
R OR RAD	RADIUS
R	RISER
RC	REINFORCED CONCRETE
RCP	REINFORCED CONCRETE PIPE
RD	ROOF DRAIN
RDCR	REDUCER
REC	RECESSED EXTINGUISHER CABINET
REFR	REFRIGERATOR
REHAB	REHABILITATION
REINF	REINFORCE
REQD	REQUIRED
RESIL	RESILIENT
RF	RETURN FAN
RH	ROBE HOOK
RM	ROOM
RO	ROUGH OPENING
RST	REINFORCING STEEL
S	SOUTH
SAT	SUSPENDED ACOUSTICAL TILE
SC	SHOWER CURTAIN
SCHED	SCHEDULE
SCR	SHOWER CURTAIN ROD
SD	SOAP DISPENSER
SD/GB	SOAP DISH & GRAB BAR
SEAL.	SEALER
SECT	SECTION
SF	SUPPLY FAN
SG	SAFETY GLASS
SH	SHEET
SHS	FOLD-UP SHOWER SEAT
SHTG	SHEETING
SIM	SIMILAR
SLV	SHORT LEG VERTICAL
S.O.	SHUTOFF
SPECD	SPECIFIED
SPECS	SPECIFICATIONS
SPG	SPACING
SQ	SQUARE
SQF	SEAMLESS QUARTZ FLOORING
SS	SUBSTATION
SSK	SERVICE SINK
SST	STAINLESS STEEL
STA	STATION
STD	STANDARD
STIF	STIFFENER
STOR	STORAGE
STR	STRAIGHT
STRUCT	STRUCTURAL
STL	STEEL
SUSP	SUSPENDED
SYMM	SYMMETRICAL
T	TANGENT LENGTH
T	TINTED
T	TREAD
T&B	TOP AND BOTTOM
T&G	TONGUE AND GROOVE
TC	TOP OF CONCRETE
TEMP	TEMPORARY
TF	TOP FACE
TG	TEMPERED GLASS
THK	THICK
THRD	THREADED
T.O.	TOP OF
TP	TOWEL PIN
TPD	TONS PER DAY
TPI	TURNOUT POINT OF INTERSECTION
TRANSV	TRANSVERSE
TSS	TOTAL SUSPENDED SOLIDS
TST	TOP OF STEEL
TTC	TELEPHONE TERMINAL CABINET
TTD	TOILET TISSUE DISPENSER
TW	TOP OF WALL
TYP	TYPICAL
UF	UTILITY FAN
UHE	ELECTRIC UNIT HEATER
UHG	GAS UNIT HEATER
UHW	HOT WATER UNIT HEATER
UPS	UNINTERRUPTIBLE POWER SUPPLY
V	VENT
VB	VINYL BASE
VCP	VITRIFIED CLAY PIPE
VCT	VINYL COMPOSITION TILE
VD	MANUAL AIR VOLUME DAMPER
VERT	VERTICAL
VP	VAPOR PROOF
VTR	VENT THRU ROOF
VWC	VINYL WALL COVERING
W	WEST
W/	WITH
WD	WOOD
WE	WALL EXHAUSTER
WG	WIRE GLASS
WH	WATER HEATER
WK	WEEK
WR	WASTE RECEPTACLE
WR GWB	WATER RESISTANT GYPSUM WALLBOARD
WS	WATER STOP OR WATERSURFACE
WS	WELDED STEEL
WWF	WELDED WIRE FABRIC
XFMR	TRANSFORMER
YR	YEAR

FLOW STREAM IDENTIFICATION

AIR	AIR LABORATORY
ALP	AIR LOW PRESSURE PROCESS
BYP	BYPASS
BPF	BELT PRESS FILTRATE
CD	CHEMICAL DRAIN
CS	CHLORINE SOLUTION
CSM	CHLORINE BASIN SCUM
D	DRAIN
DG	DIGESTER GAS
DOF	DIGESTER OVERFLOW
DS	DIGESTED SLUDGE
DSP	DIGESTER SUPERNATANT
DDS	DEWATERED DIGESTED SLUDGE
FB	FLUSHING BYPASS
G	GRIT
HOR	HYDRAULIC OIL RETURN
HOS	HYDRAULIC OIL SUPPLY
HRDS	HEATED RECIRCULATED DIGESTED SLUDGE
HW	HOT WATER (POTABLE)
HW1	HEATED PLANT SERVICE WATER
HWR	HEATED WATER RETURN
HWS	HEATED WATER SUPPLY
ML	MIXED LIQUOR
NG	NATURAL GAS
OF	OVERFLOW
PD	PROCESS DRAIN
PE	PRIMARY EFFLUENT
PI	PRIMARY INFLUENT
PLE	PLANT EFFLUENT
PO	POLYMER SOLUTION
PS	PRIMARY SLUDGE
PSM	PRIMARY SCUM
RAS	RETURN ACTIVATED SLUDGE
RD	RAIN DRAIN, ROOF DRAIN
RDS	RECIRCULATED DIGESTED SLUDGE
RS	RAW SEWAGE
SA	SAMPLE
SCR	SCREENINGS
SD	STORM DRAIN
SE	SECONDARY EFFLUENT
SG	SANITARY SEWER (GRAVITY)
SRN	SCREENINGS
SSM	SECONDARY SCUM
TDS	THICKENED DIGESTED SLUDGE
THF	THICKENER FILTRATE
TWAS	THICKENED WASTE ACTIVATED SLUDGE
UD	UNDERDRAIN
V	VENT
WAS	WASTE ACTIVATED SLUDGE
W	WATER, POTABLE
W1	PLANT SERVICE WATER
W2	CHLORINATED EFFLUENT

WARREN A. HOOD — STATE OF WASHINGTON — REGISTERED PROFESSIONAL ENGINEER

CH2M HILL

DSGN	D CHRISINGER
DR	D CHRISINGER
CHK	K HOOD
APVD	K HOOD

NO.	DATE	REVISION	BY	APVD

REUSE OF DOCUMENTS
THIS DOCUMENT, AND THE IDEAS AND DESIGNS INCORPORATED HEREIN, AS AN INSTRUMENT OF PROFESSIONAL SERVICE, IS THE PROPERTY OF CH2M HILL AND IS NOT TO BE USED, IN WHOLE OR IN PART, FOR ANY OTHER PROJECT WITHOUT THE WRITTEN AUTHORIZATION OF CH2M HILL.
©CH2M HILL

BAR IS ONE INCH ON ORIGINAL DRAWING. 0 — 1" IF NOT ONE INCH ON THIS SHEET, ADJUST SCALES ACCORDINGLY.

CITY OF WENATCHEE, WASHINGTON
WASTEWATER TREATMENT PLANT IMPROVEMENTS

GENERAL DRAWINGS
ABBREVIATIONS

DWG NO. 10-G-3
DATE NOV. 1990
PROJ NO. SEA24579.N1

DATE: 11-5-90 DLC
DRAWN BY: B. CARR DESIGNED BY: K. HOOD
DGN NAME: G:/PROJ2/WENATCHE/WE010G-D.DGN

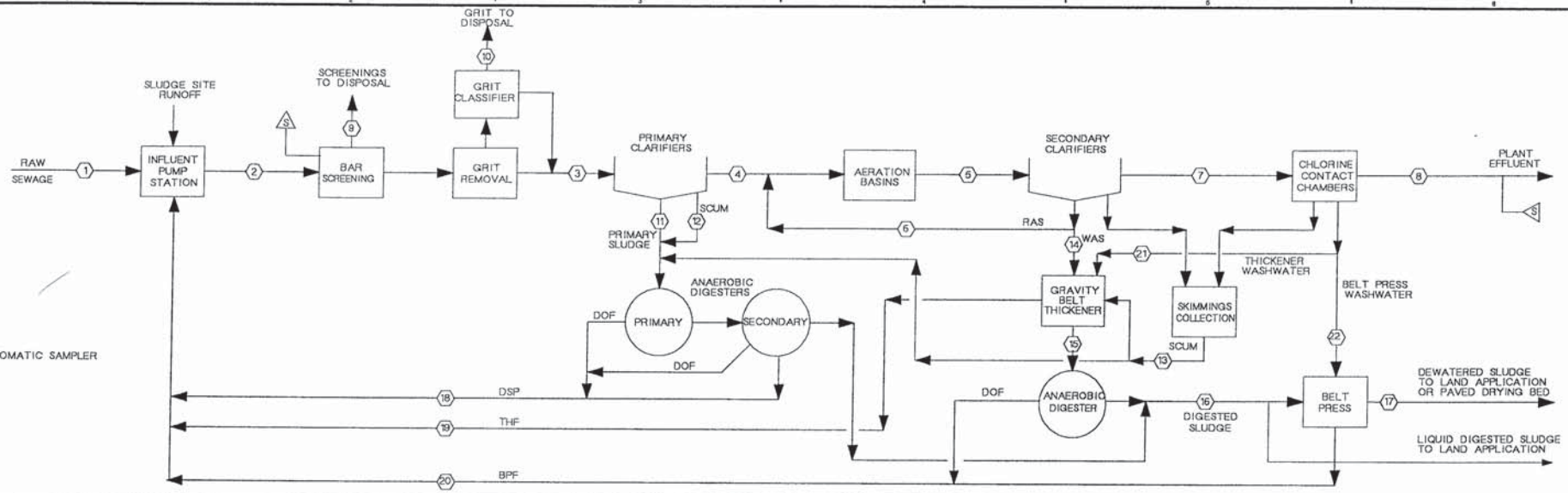

PLANT INFLUENT - DESIGN LOADINGS AND FLOW RATES

	YR 1987	DESIGN	UNITS
DESIGN FLOW RATES			
AVERAGE ANNUAL (AAF)	3.0	5.0	MGD
MAXIMUM MONTH (MMF)	3.3	5.5	MGD
MAXIMUM DAY (MDF)	7.5	10.5	MGD
PEAK HOUR (PF)	15.0 *	11.0	MGD
DESIGN BOD_5 LOADINGS			
AVERAGE DAY	4750	7920	LB/DAY
MAXIMUM MONTH	6150	10300	LB/DAY
MAXIMUM WEEK	7630	12200	LB/DAY
DESIGN TSS LOADINGS			
AVERAGE DAY	5050	8380	LB/DAY
MAXIMUM MONTH	6060	10060	LB/DAY
MAXIMUM WEEK		14250	LB/DAY

*HIGHER THAN DESIGN DUE TO INFILTRATION AND IN FLOW (I/I). DESIGN PEAK FLOW WAS ESTABLISHED BY THE DEPARTMENT OF ECOLOGY AND ASSUMES IMPLEMENTATION OF STORM SEWER SEPARATION AND OTHER I/I REDUCTION WORK.

FLOW BALANCE - DESIGN YEAR

STREAM IDENTIFICATION	STREAM ID	ANNUAL AVERAGE	MAXIMUM MONTH	PEAK HOUR	UNITS
PLANT INFLUENT	1	5.00	5.50	11.00	MGD
INFLUENT + RECYCLE	2	5.13	5.71	11.60	MGD
SCREEN/DEGRIT EFFLUENT	3	5.13	5.71	11.60	MGD
PRIMARY EFFLUENT	4	5.12	5.69	11.56	MGD
MIXED LIQUOR	5	7.12	7.99	14.76	MGD
RETURN ACTIVATED SLUDGE	6	2.00	2.30	3.20	MGD
SECONDARY EFFLUENT	7	5.04	5.68	11.13	MGD
PLANT EFFLUENT	8	5.00	5.50	11.00	MGD
SCREENINGS	9	1.5	3.0	--	CY/D
GRIT	10	0.5	1.0	--	CY/D
PRIMARY SLUDGE	11	0.017	0.020	0.037	MGD
PRIMARY SCUM	12	0.0002	0.0002	0.0002	MGD
SECONDARY SKIMMINGS	13	0.0004	0.0004	0.0004	MGD
WASTE ACTIVATED SLUDGE	14	0.077	0.113	0.432	MGD
THICKENED WAS	15	0.013	0.019	0.020	MGD
DIGESTED SLUDGE	16	0.021	0.029	0.043	MGD
DEWATERED SLUDGE	17	26	34	--	CY/D
DIGESTER SUPERNATANT	18	0.009	0.010	0.014	MGD
THICKENER FILTRATE	19	0.074	0.133	0.455	MGD
BELT PRESS FILTRATE	20	0.050	0.068	0.129	MGD
THICKENER WASHWATER	21	0.010	0.039	0.043	MGD
BELT PRESS WASHWATER	22	0.029	0.039	0.086	MGD

SOLIDS BALANCE - DESIGN YEAR

STREAM IDENTIFICATION	STREAM ID	ANNUAL AVERAGE	MAXIMUM MONTH	MAX. WEEK	UNITS
PLANT INFLUENT	1	8380	10,060	14,250	LB/DAY
INFLUENT + RECYCLE	2	9520	11,600	16,310	LB/DAY
SCREEN/DEGRIT EFFLUENT	3	9520	11,600	16,310	LB/DAY
PRIMARY EFFLUENT	4	3810	4600	6520	LB/DAY
MIXED LIQUOR	5	119,550	133,270	186,820	LB/DAY
RETURN ACTIVATED SLUDGE	6	113,780	126,290	176,770	LB/DAY
SECONDARY EFFLUENT	7	1260	1400	2170	LB/DAY
PLANT EFFLUENT	8	1250	1380	2140	LB/DAY
SCREENINGS	9	--	--	--	LB/DAY
GRIT	10	--	--	--	LB/DAY
PRIMARY SLUDGE	11	5710	6900	9790	LB/DAY
PRIMARY SCUM	12	--	--	--	LB/DAY
SECONDARY SKIMMINGS	13	--	--	--	LB/DAY
WASTE ACTIVATED SLUDGE	14	4510	6580	7880	LB/DAY
THICKENED WAS	15	4280	6250	7490	LB/DAY
DIGESTED SLUDGE	16	6130	8100	9440	LB/DAY
DEWATERED SLUDGE	17	5520	7290	8500	LB/DAY
DIGESTER SUPERNATANT	18	300	300	470	LB/DAY
THICKENER FILTRATE	19	230	330	650	LB/DAY
BELT PRESS FILTRATE	20	610	810	944	LB/DAY
THICKENER WASHWATER	21	0	0	0	LB/DAY
BELT PRESS WASHWATER	22	0	0	0	LB/DAY

KAREN A. HOOD — STATE OF WASHINGTON — REGISTERED PROFESSIONAL ENGINEER

CH2M HILL

DSGN K. HOOD
DR J. BROWN
CHK K HOOD
APVD K HOOD

NO.	DATE	REVISION	BY	APVD

REUSE OF DOCUMENTS
THIS DOCUMENT, AND THE IDEAS AND DESIGNS INCORPORATED HEREIN, AS AN INSTRUMENT OF PROFESSIONAL SERVICE, IS THE PROPERTY OF CH2M HILL AND IS NOT TO BE USED, IN WHOLE OR IN PART, FOR ANY OTHER PROJECT WITHOUT THE WRITTEN AUTHORIZATION OF CH2M HILL.
©CH2M HILL

BAR IS ONE INCH ON ORIGINAL DRAWING. 0 1"
IF NOT ONE INCH ON THIS SHEET, ADJUST SCALES ACCORDINGLY.

CITY OF WENATCHEE, WASHINGTON
WASTEWATER TREATMENT PLANT IMPROVEMENTS

GENERAL DRAWINGS
LIQUIDS/SOLIDS FLOW DIAGRAM AND BALANCE AND INFLUENT CHARACTERISTICS

DWG NO. 10-G-4
DATE NOV. 1990
PROJ NO. SEA24579.N1

DATE: 11-6-90 DLC
DRAWN BY: B. CARR DESIGNED BY: K. HOOD
DGN NAME: 0:/PROJ2/WENATCHE/WE010G-E.DGN

INFLUENT PUMP STATION

INFLUENT PUMPS	
NUMBER OF UNITS	4
CAPACITY	2,500 GPM
TYPE	2 CENTRIFUGAL, VARIABLE SPEED
	2 CENTRIFUGAL, CONSTANT SPEED
PRIMARY BYPASS PUMPS	
NUMBER OF UNITS	2
CAPACITY	1 @ 6000 GPM
	1 @ 5800 GPM
TYPE	CENTRIFUGAL, CONSTANT SPEED

SCREENS

MECHANICALLY CLEANED BAR SCREENS	
NUMBER OF UNITS	2
WIDTH, EACH	2.5 FT
CAPACITY, EACH	5.6 MGD
CLEAR OPENING SCREEN WIDTH	5/8 IN
MANUALLY CLEANED BAR SCREENS	
NUMBER OF UNITS	1
WIDTH	4 FT
CAPACITY	5.6 MGD
CLEAR OPENING SCREEN WIDTH	1 IN

GRIT SEPARATION CHAMBERS

GRIT CHAMBERS	
NUMBER OF UNITS	2
TYPE	CIRCULAR W/ PADDLE
PEAK CAPACITY	11 MGD
GRIT AGITATION	
BLOWERS	
NUMBER OF UNITS	2
TYPE	ROTARY POSITIVE DISPLACEMENT
CAPACITY	75 SCFM, EACH
GRIT REMOVAL	
NUMBER OF GRIT PUMPS	2
PUMP CAPACITY	250 GPM
PUMP TYPE	RECESSED IMPELLER CENTRIFUGAL
CYCLONE DEGRITTERS	
NUMBER OF UNITS	2
CAPACITY	250 GPM, EACH
SIZE	10 IN
CLASSIFIERS	
NUMBER OF UNITS	1
TYPE	INCLINED SCREW
SIZE	12 IN

CHANNEL AERATION

AERATION RATE	4 CFM/FT
BLOWERS (HEADWORKS CHANNEL AND SCUM BOXES)	
NUMBER OF UNITS	1
CAPACITY	20 SCFM
TYPE	ROTARY LOBE BLOWERS
CONTROL	CONSTANT SPEED

PRIMARY CLARIFICATION

CLARIFIERS	
NUMBER OF UNITS	2
DIAMETER	
EXISTING	80 FT
NEW	65 FT
SIDEWALL DEPTH (AT THE WALL)	
EXISTING	14 FT
NEW	10 FT
OVERFLOW RATE (BOTH UNITS IN SERVICE)	
AVERAGE MAXIMUM MONTH WET WEATHER FLOW	600 GAL/SQ FT/DAY
PEAK FLOW	1320 GAL/SQ FT/DAY
OVERFLOW RATE 80FT DIA UNIT IN SERVICE	
AVERAGE MAXIMUM MONTHLY WET WEATHER FLOW	995 GAL/SQ FT/DAY
PEAK FLOW	2200 GAL/SQ FT/DAY
OVERFLOW RATE 65FT DIA UNIT IN SERVICE	
AVERAGE MAXIMUM MONTHLY WET WEATHER FLOW	1610 GAL/SQ FT/DAY
PEAK FLOW	3300 GAL/SQ FT/DAY
DETENTION TIME (TWO UNITS IN SERVICE)	
AVERAGE MAXIMUM MONTH WET WEATHER FLOW	1.7 HOURS
PERFORMANCE (ASSUMED)	
BOD REMOVAL	30 PERCENT
TSS REMOVAL	60 PERCENT
PRIMARY SLUDGE/SCUM PUMPS	
NUMBER OF UNITS	2
CAPACITY	0 TO 85 GPM
TYPE	SIMPLEX PLUNGER

SECONDARY PROCESS

AERATION BASINS	
NUMBER OF BASINS	2
VOLUME EACH BASIN	641,900 GAL
SIDEWATER DEPTH (APPROXIMATE)	15 FT
DETENTION TIME (DESIGN YEAR, NEGLECTING RAS)	
AVERAGE MAXIMUM MONTH WET WEATHER FLOW (2 BASINS)	5.2 HOURS
PEAK FLOWS (2 BASINS)	2.4 HOURS
MLSS	
AVERAGE ANNUAL	2000 MG/L
MAXIMUM WINTER MONTH	2000 MG/L
SECONDARY CLARIFIERS	
NUMBER OF UNITS	2
DIAMETER	80 FT
SIDEWATER DEPTH	12 FT
OVERFLOW RATE (DESIGN YEAR)	
AVERAGE MAXIMUM MONTH WET WEATHER FLOW	497 GAL/SQ FT/DAY
PEAK FLOW	1094 GAL/SQ FT/DAY
SOLIDS LOADING RATE (DESIGN YEAR)	
AVERAGE MAXIMUM WET WEATHER	13.3 LBS/SQ FT/DAY
PEAK	24.5 LBS/SQ FT/DAY
RAS PUMPS	
NUMBER OF UNITS	2
CAPACITY, EACH	1,750 GPM
TYPE	CENTRIFUGAL
CONTROL	VARIABLE SPEED
WAS PUMP	
NUMBER OF UNITS	1
CAPACITY	70 - 400 GPM
TYPE	NONCLOG CENTRIFUGAL
CONTROL	MODULATING VALVE
SECONDARY SCUM PUMP	
NUMBER OF UNITS	1
CAPACITY	80 GPM
TYPE	SIMPLEX PLUNGER

CHLORINATION

CHLORINE CONTACT CHAMBER	
NUMBER OF UNITS	2
VOLUME, EACH (PEAK FLOW)	16,600 CU FT
SIDEWATER DEPTH (AVERAGE FLOW)	9.6 FT
DETENTION TIME (DESIGN YEAR)	
AVERAGE MAXIMUM MONTH WET WEATHER FLOW	1.1 HOURS
PEAK	32 MINUTES
FLOW PATH L/W RATIO	34:1
CHLORINE DOSAGE (ASSUMED)	
POST CHLORINATION	
AVERAGE MAXIMUM MONTH WET WEATHER FLOW	4 MG/L
MINIMUM FLOW	3 MG/L
PEAK FLOW	8 MG/L
INTERMEDIATE CHLORINATION	
SECONDARY CLARIFIERS	4-8 MG/L
RETURN ACTIVATED SLUDGE	6 MG/L
CHLORINE USAGE	
POST CHLORINATION	
AVERAGE MAXIMUM MONTH WET WEATHER FLOW	170 LBS/DAY
MINIMUM FLOW	40 LBS/DAY
PEAK FLOW	730 LBS/DAY
INTERMEDIATE CHLORINATION	
SECONDARY CLARIFIERS	50 LBS/DAY
RETURN ACTIVATED SLUDGE	80 LBS/DAY
CHLORINE MIXING SYSTEM	
TYPE	DIFFUSER
NUMBER OF UNITS	2
CHLORINATORS	
NUMBER OF AUTOMATIC UNITS	2
CAPACITY	2000 LBS/DAY EACH

SERVICE WATER SYSTEMS

W1 SYSTEM	
SYSTEM PRESSURE	110 PSI
NUMBER OF PUMPS	2
PUMP CAPACITIES	210 GPM, 105 GPM
BLOWER BUILDING SYSTEM	
SYSTEM PRESSURE	110 PSI
NUMBER OF PUMPS	2
PUMP CAPACITY, EACH	45 GPM

NON POTABLE WATER

W2 WATER SYSTEM	
SYSTEM PRESSURE	40 PSI
NUMBER OF PUMPS	2
PUMP CAPACITY, EACH	175 GPM
BELT WASHWATER	
SYSTEM PRESSURE	120 PSI
NUMBER OF PUMPS	2
PUMP CAPACITY, EACH	85 GPM

KAREN A. HOOD — STATE OF WASHINGTON — REGISTERED PROFESSIONAL ENGINEER

CH2M HILL

DSGN	K. HOOD				
DR	J. BROWN				
CHK	K HOOD				
APVD	K HOOD	NO.	DATE	REVISION	BY / APVD

REUSE OF DOCUMENTS
THIS DOCUMENT, AND THE IDEAS AND DESIGNS INCORPORATED HEREIN, AS AN INSTRUMENT OF PROFESSIONAL SERVICE, IS THE PROPERTY OF CH2M HILL AND IS NOT TO BE USED, IN WHOLE OR IN PART, FOR ANY OTHER PROJECT WITHOUT THE WRITTEN AUTHORIZATION OF CH2M HILL.
© CH2M HILL

BAR IS ONE INCH ON ORIGINAL DRAWING. 0 — 1"
IF NOT ONE INCH ON THIS SHEET, ADJUST SCALES ACCORDINGLY.

CITY OF WENATCHEE, WASHINGTON
WASTEWATER TREATMENT PLANT IMPROVEMENTS

GENERAL DRAWINGS
DESIGN CRITERIA

DWG NO. 10-G-5
DATE NOV. 1990
PROJ NO. SEA24579.N1

DATE: 11-6-90 DLC
DRAWN BY: B. CARR DESIGNED BY: K. HOOD
DGN NAME: O:/PROJ2/WENATCHE/WE010G-F.DGN

ANAEROBIC DIGESTERS

PRIMARY SLUDGE PRIMARY DIGESTER	
NUMBER OF UNITS	1
VOLUME	39,800 CU FT
DIAMETER	45 FT
MAXIMUM SIDEWATER DEPTH	25 FT
GRIT ALLOWANCE (INCLUDED IN MAX. SIDEWATER DEPTH)	2 FT
SCUM ALLOWANCE (INCLUDED IN MAX. SIDEWATER DEPTH)	2 FT
DETENTION TIME	
ANNUAL AVERAGE	19.7 DAYS
MAXIMUM MONTHLY AVERAGE	16.4 DAYS
MAXIMUM WEEK	11.6 DAYS
GAS MIXING SYSTEM	
GAS COMPRESSOR CAPACITY	70 CFM @ 18 psig
NUMBER OF GAS DIFFUSERS	8 SHEAR FUSERS
COVER	FIXED CONCRETE DOME
PRIMARY SLUDGE SECONDARY DIGESTER	
NUMBER OF UNITS	1
VOLUME	39,800 CU FT
DIAMETER	45 FT
MAXIMUM SIDEWATER DEPTH	25 FT
MIXING	NONE
COVER	STEEL, GASHOLDER
WASTE ACTIVATED SLUDGE ANAEROBIC DIGESTER	
NUMBER OF UNITS	1
VOLUME (USING SIDEWATER DEPTH)	33,400 CU FT
DIAMETER	45 FT
TOTAL DEPTH	34.6 FT
SCUM ALLOWANCE	2.5 FT
FREEBOARD	8.5 FT
SIDEWATER DEPTH	26 FT
DETENTION TIME (5.0 MGD AVE FLOW, 4% TS FEED)	
AVERAGE	25.6 DAYS
MAXIMUM MONTH	19.9 DAYS
MAXIMUM WEEK	15.4 DAYS
GAS MIXING SYSTEM	
GAS COMPRESSOR CAPACITY	70 CFM @ 18 PSIG
NUMBER OF GAS DIFFUSERS	8 SHEAR FUSERS
GAS PRODUCTION	
VSS DESTRUCTION (ASSUMED)	60 PERCENT
ANNUAL AVERAGE	15 CU FT/LB VSS DESTROYED
MAXIMUM MONTH	18 CU FT/LB VSS DESTROYED
LOWER HEATING VALUE (ASSUMED)	600 BTU/CU FT
WASTE GAS BURNER	
NUMBER OF UNITS	1
CAPACITY	8100 CFM
HOT WATER BOILER	
NUMBER OF UNITS	2
EXISTING	1
NEW	1
OUTPUT CAPACITY	
EXISTING	1,000,000
NEW	3,500,000 BTU/hr
FUEL SYSTEM	PRIMARY-DIGESTER GAS
	SECONDARY-NATURAL GAS

ANAEROBIC DIGESTERS (CONT.)

SLUDGE HEAT EXCHANGERS	
NUMBER OF UNITS	2
TYPE	SPIRAL COIL
CAPACITY	1,000,000 BTU/HR
SLUDGE FLOW RATE	250 GPM
HOT WATER FLOW RATE	150 GPM
DIGESTED SLUDGE TRANSFER PUMPS	
NUMBER OF UNITS	2
TYPE, PUMP NO.1	SIMPLEX PLUNGER
CAPACITY	90 GPM
TYPE, PUMP NO.2	RECESSED IMPELLER, CENTRIFUGAL
CAPACITY	300 GPM
DIGESTED SLUDGE CIRCULATION PUMPS	
NUMBER OF UNITS	2
TYPE	RECESSED IMPELLER CENTRIFUGAL
CAPACITY	250 GPM

SLUDGE THICKENING

SLUDGE THICKENER	
TYPE	GRAVITY BELT
NUMBER OF UNITS	1
SIZE (NOMINAL)	2.0 METER
SOLIDS LOADING (PER UNIT)	800 - 1400 LBS/HR
HYDRAULIC LOADING	200 - 400 GPM
POLYMER USAGE	5-10 LBS/DRY TON
% SOLIDS OBTAINED	4% MIN TO 8% MAX
THICKENED SLUDGE PUMP	
TYPE	OPEN THROAT PROGRESSIVE CAVITY
NUMBER OF UNITS	1
CAPACITY	25 - 50 GPM
CONTROL	VARIABLE SPEED
BACK-UP THICKENING	
TYPE	DISSOLVED AIR FLOTATION
SIZE	150 FT^2
CAPACITY @ 2.0 $LB/FT^2/HR$	300 LB/HR

SLUDGE DEWATERING

SLUDGE DEWATERING	
TYPE	BELT FILTER PRESS
NUMBER OF UNITS	1
SIZE (NOMINAL)	2.0 METER
SOLIDS LOADING	1,000 - 2400 LBS/HR
HYDRAULIC LOADING	60 - 200 GPM
POLYMER USAGE	10-20 LBS/DRY TON
% SOLIDS OBTAINED	15% MIN TO 20% MAX
DIGESTED SLUDGE FEED/LOAD PUMP	
NUMBER OF UNITS	1
TYPE	PROGRESSIVE CAVITY
CAPACITY	50 - 200 GPM
CONTROL	VARIABLE SPEED

SLUDGE BLEND TANK

DIGESTED WASTE ACTIVATED AND DIGESTED PRIMARY SLUDGE	
NUMBER OF UNITS	1
CAPACITY	12,000 GAL
SLUDGE MIXER	
TYPE	SUBMERSIBLE

POLYMER SYSTEM

TYPE	DRY POLYMER, MANUAL
NUMBER OF POLYMER PUMPS	4
POLYMER PUMPS	
TYPE	PROGRESSING CAVITY
NUMBER OF UNITS	3 (1 SPARE)
CAPACITY	1.5 - 15 GPM

SLUDGE DRYING BEDS

TYPE	PAVED
NUMBER OF BEDS	8
BED SIZE, EACH	100 FT X 100 FT
TOTAL AREA	80,000 SQ FT
APPLICATION RATE (DEWATERED SLUDGE)	25 LB/SQ FT/YR

KAREN A. HOOD — STATE OF WASHINGTON — REGISTERED PROFESSIONAL ENGINEER

CH2M HILL

DSGN	K. HOOD
DR	J. BROWN
CHK	K HOOD
APVD	K HOOD

NO.	DATE	REVISION	BY	APVD

REUSE OF DOCUMENTS
THIS DOCUMENT, AND THE IDEAS AND DESIGNS INCORPORATED HEREIN, AS AN INSTRUMENT OF PROFESSIONAL SERVICE, IS THE PROPERTY OF CH2M HILL AND IS NOT TO BE USED, IN WHOLE OR IN PART, FOR ANY OTHER PROJECT WITHOUT THE WRITTEN AUTHORIZATION OF CH2M HILL.

© CH2M HILL

BAR IS ONE INCH ON ORIGINAL DRAWING. 0 1"
IF NOT ONE INCH ON THIS SHEET, ADJUST SCALES ACCORDINGLY.

CITY OF WENATCHEE, WASHINGTON
WASTEWATER TREATMENT PLANT IMPROVEMENTS

GENERAL DRAWINGS
DESIGN CRITERIA

DWG NO. 10-G-5
DATE NOV. 1990
PROJ. NO. SEA24579.N1

DATE: 11-6-90 DLC
DRAWN BY: B. CARR DESIGNED BY: K. HOOD
DGN NAME: 0:/PROJ2/WENATCHE/WE010G-G.DGN

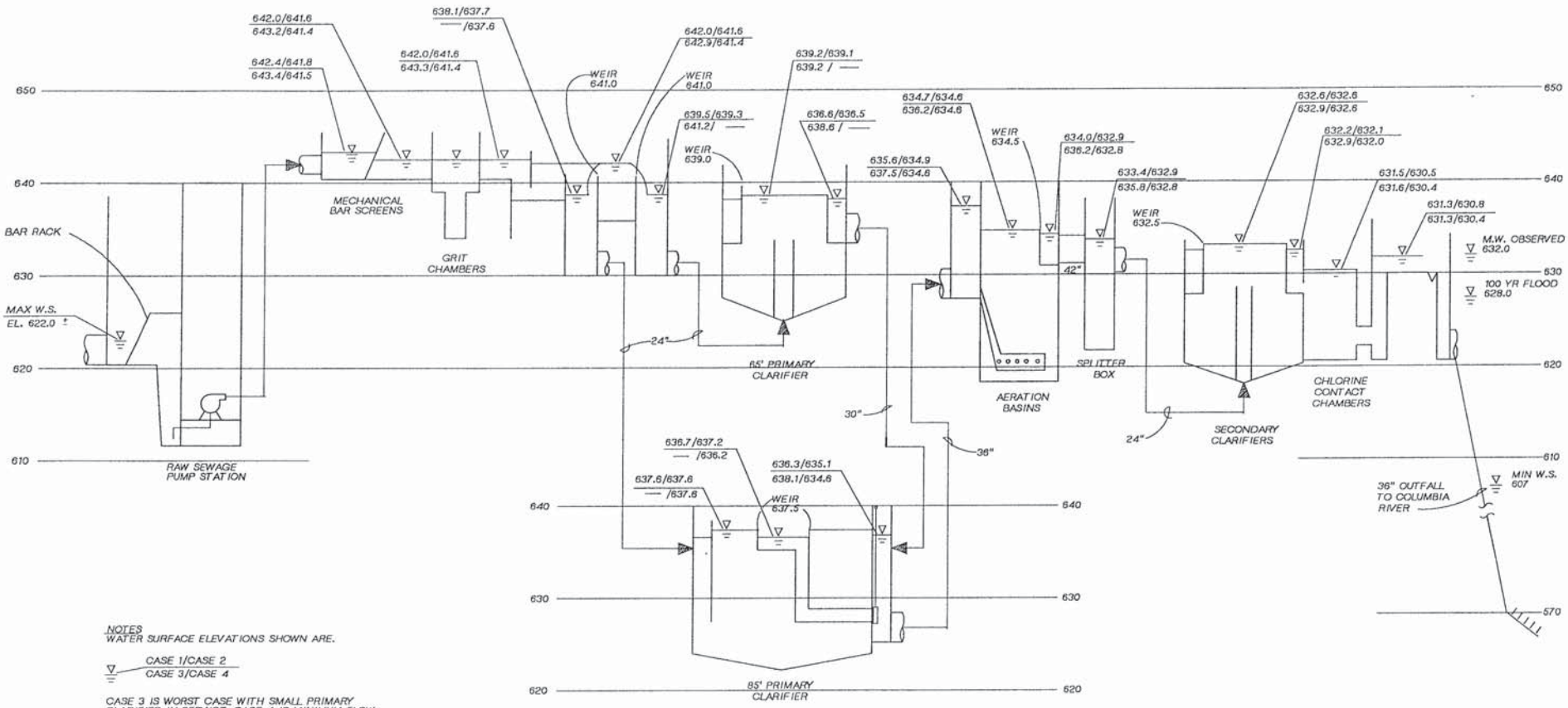

NOTES
WATER SURFACE ELEVATIONS SHOWN ARE.

CASE 1/CASE 2
CASE 3/CASE 4

CASE 3 IS WORST CASE WITH SMALL PRIMARY CLARIFIER IN SERVICE. CASE 4 IS MINIMUM FLOW WITH LARGE PRIMARY CLARIFIER IN SERVICE.

UNITS IN SERVICE/TOTAL UNITS

		MECHANICAL BAR SCREENS	GRIT CHAMBERS	PRIMARY CLARIFIERS	AERATION BASINS	SECONDARY CLARIFIERS	CHLORINE CONTACT CHAMBERS
CASE 1	11 MGD	2/2	2/2	2/2	2/2	2/2	2/2
CASE 2	5 MGD	2/2	2/2	2/2	2/2	2/2	2/2
CASE 3	11 MGD	2/2	1/2	1/2	1/2	1/2	1/2
CASE 4	1.5 MGD	1/2	1/2	1/2	1/2	1/2	1/2

KAREN A. HOOD
REGISTERED PROFESSIONAL ENGINEER

CH2M HILL

DSGN	K. HOOD
DR	J. BROWN
CHK	K. HOOD
APVD	K HOOD

NO.	DATE	REVISION	BY	APVD

REUSE OF DOCUMENTS
THIS DOCUMENT, AND THE IDEAS AND DESIGNS INCORPORATED HEREIN, AS AN INSTRUMENT OF PROFESSIONAL SERVICE, IS THE PROPERTY OF CH2M HILL AND IS NOT TO BE USED, IN WHOLE OR IN PART, FOR ANY OTHER PROJECT WITHOUT THE WRITTEN AUTHORIZATION OF CH2M HILL.
©CH2M HILL

BAR IS ONE INCH ON ORIGINAL DRAWING.
0 1"
IF NOT ONE INCH ON THIS SHEET, ADJUST SCALES ACCORDINGLY.

CITY OF WENATCHEE, WASHINGTON
WASTEWATER TREATMENT PLANT IMPROVEMENTS

GENERAL DRAWINGS
HYDRAULIC PROFILE

DWG NO. 10-G-7
DATE NOV. 1990
PROJ NO. SEA24579.N1

DATE: 11-4-90 DLC
DRAWN BY: DL CHRISINGER DESIGNED BY: DL CHRISINGER
DGN NAME: 0:/PROJ2/WENATCHE/WE010G-H.DGN

CIVIL LEGEND

- 96.5 — CONTOUR LINE
- 93.6 OR 93.6 — SPOT ELEVATION (OR FINISH GRADE)
- CULVERT
- CB — CATCH BASIN, STORMWATER INLET
- MANHOLE
- SURVEY CONTROL POINT
- STRUCTURE LOCATION POINT
- DRAINAGE WAY OR DITCH
- CENTERLINE, BUILDING, ROAD, ETC.
- FENCE
- GATE
- CONCRETE WALK
- UTILITY OR TELEPHONE POLE
- UTILITY OR TELEPHONE POLE WITH GUY SUPPORT
- PROPERTY LINE/RIGHT OF WAY
- PI (POINT OF INTERSECTION)
- R — RADIUS
- Δ — DELTA
- L — LENGTH
- T — TANGENT
- CONCRETE TO BE REMOVED (CURB OR SIDEWALK)

PLAN AND PROFILE LEGEND

NEW

- MH B1-1 — MANHOLE DESIGNATION
- GRAVITY SEWER WITH MANHOLE
- 8"@0.0040 — SIZE AND SLOPE OF PIPE (8" PIPE AT 0.0040 FT/FT)
- 5+00 — ROAD CENTERLINE STATIONING

EXISTING

- 8"SS — SANITARY SEWER WITH MANHOLE
- 6"PS — PRESSURE SEWER
- 18"SD — STORM SEWER WITH CATCH BASIN AND MANHOLE
- 8"W — WATER PIPELINE WITH FIRE HYDRANT AND VALVE
- 2"G — GAS PIPELINE

MATERIAL SYMBOLS

- CONCRETE
- CMU PLAN
- CMU SECTION
- STUD WALL PLAN
- GYPSUM WALLBOARD
- RIGID INSULATION
- RIGID INSULATION
- BATT INSULATION
- PLYWOOD
- WOOD, ROUGH CONTINUOUS
- WOOD, ROUGH NON-CONTINUOUS
- WOOD, FINISHED
- STEEL
- ACOUSTICAL TILE
- CARPET

ARCHITECTURAL LEGEND

SYMBOL	LEGEND
ACTIVE / INACTIVE	INDICATES PAIR OF DOORS
3 — ELEVATION NUMBER / DIRECTION SHOWN	INTERIOR WALL ELEVATION
STRUCTURE NO. / 60-16 — ROOM NO.	ROOM DESIGNATION
60 / 26A — STRUCTURE NO. / DOOR NO.	DOOR DESIGNATION
L-1	LOUVER NUMBER
W-1	WINDOW NUMBER
FEXT	(FEXT) FIRE EXTINGUISHER
HINGE SIDE	DOOR, HATCH, OR WINDOW HINGE LOCATION

DETAIL AND SECTION DESIGNATION

SECTION (LETTER) OR DETAIL (NUMERAL) DESIGNATION — A

DRAWING NUMBER (REPLACED WITH A LINE IF TAKEN AND SHOWN ON THE SAME SHEET) — 1-M-2

ON DRAWING WHERE SECTION OR DETAIL IS TAKEN: DRAWING NUMBER WHERE SHOWN

ON DRAWING WHERE SECTION OR DETAIL IS SHOWN: DRAWING NUMBER(S) WHERE TAKEN

STANDARD DETAIL DESIGNATION

12 — STANDARD DETAIL AS INDICATED

HEATING, VENTILATING, AND AIR CONDITIONING SYMBOLS

- WALL REGISTER OR GRILLE (SUPPLY) WSG, WSR
- CEILING DIFFUSER (SUPPLY) CD
- CEILING REGISTER OR GRILLE (RETURN AND EXHAUST) CG, CR
- WALL REGISTER OR GRILLE (RETURN AND EXHAUST) WG, WR
- TURNING VANES
- SOUND ATTENUATED DUCT
- FD — FIRE DAMPER
- MANUAL OPPOSED-BLADE DAMPER
- MANUAL BUTTERFLY DAMPER
- M — MOTORIZED DAMPER
- FLEXIBLE CONNECTION
- R — INCLINED RISE IN DUCT
- D — INCLINED DROP IN DUCT
- SUPPLY DUCT (SECTION)
- INTAKE, RETURN, OR EXHAUST DUCT (SECTION)
- T — THERMOSTAT
- ECP — ENVIRONMENTAL CONTROL PANEL
- (200) — 200 CFM

DRAIN AND CLEANOUT SYMBOLS

HD	HUB DRAIN	
FD-X	FLOOR DRAIN	(X - NO. IN SPECS)
RD-X	ROOF DRAIN	(X - NO. IN SPECS)
OD-X	OVERFLOW DRAIN	(X - NO. IN SPECS)
CO	CLEANOUT	
FCO	FLOOR CLEANOUT	

KAREN A. HOOD — STATE OF WASHINGTON — PROFESSIONAL ENGINEER

CH2M HILL

DSGN	D CHRISINGER
DR	D CHRISINGER
CHK	K HOOD
APVD	K HOOD

NO.	DATE	REVISION	BY	APVD

REUSE OF DOCUMENTS
THIS DOCUMENT, AND THE IDEAS AND DESIGNS INCORPORATED HEREIN, AS AN INSTRUMENT OF PROFESSIONAL SERVICE, IS THE PROPERTY OF CH2M HILL AND IS NOT TO BE USED, IN WHOLE OR IN PART, FOR ANY OTHER PROJECT WITHOUT THE WRITTEN AUTHORIZATION OF CH2M HILL.
©CH2M HILL

BAR IS ONE INCH ON ORIGINAL DRAWING. 0 — 1" IF NOT ONE INCH ON THIS SHEET, ADJUST SCALES ACCORDINGLY.

CITY OF WENATCHEE, WASHINGTON
WASTEWATER TREATMENT PLANT IMPROVEMENTS

GENERAL DRAWINGS
GENERAL LEGENDS

DWG NO. 10-G-8
DATE NOV. 1990
PROJ NO. SEA24579.N1

DATE: 11-6-90 DLC
DRAWN BY: DL CHRISINGER DESIGNED BY: DL CHRISINGER
DGN NAME: O:/PROJ2/WENATCHE/WE010G-1.DGN

MECHANICAL LEGEND AND NOTES

GENERAL NOTES

1. LAY PIPE TO UNIFORM GRADE BETWEEN INDICATED ELEVATION POINTS.
2. SIZE OF FITTINGS SHOWN ON PLANS SHALL CORRESPOND TO ADJACENT STRAIGHT RUN OF PIPE, UNLESS OTHERWISE INDICATED. TYPE OF JOINT AND FITTING MATERIAL SHALL BE THE SAME AS SHOWN FOR ADJACENT STRAIGHT RUN OF PIPE.
3. STANDARD PIPE HANGERS AND PIPE SUPPORTS ARE NOT SHOWN ON THE DRAWINGS. CONTRACTOR SHALL DESIGN AND INSTALL STANDARD REQUIRED PIPE SUPPORT SYSTEMS IN ACCORDANCE WITH THE SPECIFICATIONS.
4. ALL JOINTS SHALL BE WATERTIGHT. WALL PIPES SHALL BE USED WHEREVER PIPING PASSES FROM A STRUCTURE TO BACKFILL.
5. ALL FLEXIBLE CONNECTORS OR FLANGED COUPLING ADAPTERS SHALL BE PROVIDED WITH THRUST TIES, BLOCKS, OR ANCHORS, UNLESS OTHERWISE NOTED. THRUST PROTECTION SHALL BE ADEQUATE FOR TEST PRESSURES SPECIFIED.
6. SYMBOLS, LEGENDS, AND PIPE USE IDENTIFICATIONS SHOWN SHALL BE FOLLOWED THROUGHOUT THE PLANS, WHEREVER APPLICABLE. NOT ALL OF THE VARIOUS PIPING COMPONENTS ARE NECESSARILY USED IN THE PROJECT.
7. ALL BURIED PIPING SPECIFIED TO BE PRESSURE TESTED, EXCEPT FLANGED, WELDED, OR SCREWED PIPING, SHALL BE PROVIDED WITH CONCRETE THRUST BLOCKS AT ALL DIRECTION CHANGES, UNLESS OTHERWISE NOTED. SEE THRUST DETAILS AND NOTES ON THE MECHANICAL STANDARD DETAILS SHEET.
8. NUMBER AND LOCATION OF UNIONS SHOWN ON PLANS IS ONLY APPROXIMATE. PROVIDE ALL UNIONS NECESSARY TO FACILITATE CONVENIENT REMOVAL OF VALVES AND MECHANICAL EQUIPMENT.
9. WHERE A GROOVED END COUPLING IS SHOWN, IT SHALL BE THE RIGID JOINT TYPE, UNLESS OTHERWISE SPECIFIED. WHERE A FLANGED COUPLING ADAPTER IS SHOWN, A STANDARD FLANGE SHALL BE JOINED TO THE COUPLING ADAPTER.
10. EXISTING PIPING AND EQUIPMENT IS SHOWN LIGHT-LINED AND/OR SCREENED. NEW PIPING AND EQUIPMENT IS SHOWN HEAVY-LINED.
11. DIMENSIONS OR ELEVATIONS SHOWN WITH A SINGLE ASTERISK (*) ARE TO BE COORDINATED WITH THE EQUIPMENT MANUFACTURER.
12. COMPONENTS AND PANELS SHOWN WITH A DOUBLE ASTERISK (**) ARE TO BE SPECIFICALLY PROVIDED AS PART OF A PACKAGED SYSTEM.
13. CONTROL PANELS SHOWN WITH A ⊕ SHALL BE FURNISHED BY THE EQUIPMENT MANUFACTURER PER THE SPECIFICATIONS.

PIPE AND FITTING SYMBOLS

DOUBLE LINE SINGLE LINE

- EXISTING PIPE
- NEW PIPE
- EXISTING PIPE TO BE ABANDONED
- EXISTING PIPE TO BE REMOVED
- WELDED JOINT
- GROOVED END JOINT
- FLANGED JOINT
- MECHANICAL JOINT
- BELL & SPIGOT JOINT
- GROOVED END
- GROOVED END ADAPTER FLANGE
- FLANGED COUPLING ADAPTER
- FLANGED COUPLING ADAPTER WITH THRUST TIES
- FLEXIBLE COUPLING
- FLEXIBLE COUPLING WITH THRUST TIES
- BELLOWS TYPE FLEXIBLE COUPLING W/ THRUST RESTRAINT SYSTEM
- ELBOW UP
- ELBOW DOWN
- TEE UP
- TEE DOWN
- LATERAL UP
- LATERAL DOWN
- CONCENTRIC REDUCER
- ECCENTRIC REDUCER
- UNION
- CAP
- ELBOW, 90 DEGREE
- CROSS
- TEE
- ELBOW, 45 DEGREE
- LATERAL

VALVE SYMBOLS

- GATE
- KNIFE GATE
- BUTTERFLY
- GLOBE
- BALL
- VEE-BALL
- SEATING PORT
- ECCENTRIC PLUG
- PLUG OR COCK
- NEEDLE
- DIAPHRAGM
- PINCH
- SWING CHECK
- BALL CHECK
- HOSE VALVE OR WASHDOWN
- PRESSURE RELIEF
- AIR AND/OR VACUUM RELEASE
- REGULATED SIDE PRESSURE REGULATING VALVE
- BALANCING FITTING
- ELECTRIC VALVE ACTUATOR
- INDICATES SOLENOID WHEN SHOWN
- INDICATES POSITIONER WHEN SHOWN
- PNEUMATIC VALVE ACTUATOR
- VALVE OPERATOR LOCATION
- NON FREEZE POST HYDRANT WITH HOSE RACK (369)
- TO TEMPERATURE SENSOR
- TEMPERATURE SENSING VALVE
- REDUCED PRESSURE BACKFLOW PREVENTER (WITH GATE VALVES)
- HYDRAULIC VALVE ACTUATOR
- 3-WAY PLUG VALVE SEAT PORTS
- SOLENOID VALVE
- COMBINATION BALANCE FITTING AND FLOW METER
- HYDRANT
- SAMPLE
- MUD

MISCELLANEOUS PIPING SYMBOLS

- STRAINER
- SIGHT GLASS
- FLEXIBLE (ELASTOMER) PIPE CONNECTION
- GAUGE WITH COCK
- THERMOMETER
- CATHODIC PROTECTION ANODE
- FLEXIBLE METAL HOSE
- AIR SUPPLY CONNECTION
- HOSE RACK (TYPE AS INDICATED)
- SAFETY SHOWER
- EYEWASH WITH SAFETY SHOWER
- CATHODIC PROTECTION TEST STATION

PIPING DESIGNATION

EXAMPLE:

16 RAS

16 RAS — PIPE USE IDENTIFICATION LEGEND

— NOMINAL PIPE DIAMETER (INCHES)

PIPE AND FITTING END PATTERNS

B	BELL	PE	PLAIN END
S	SPIGOT	QE	GROOVED END
F	FLANGE	MJ	MECHANICAL JOINT

EXAMPLE: F, MJ, PE

VALVE DESIGNATIONS

CONTROL VALVES

- FLOW DIRECTION
- VALVE SYMBOL

* BUBBLE WITH XV OR XCV DESIGNATION SHOWN ON P&ID WHERE: X = PROCESS VARIABLE

MANUAL VALVES AND CHECK VALVES

- SIZE OF VALVE (INCHES) — 8V500
- VALVE DESIGNATION
- VALVE TYPE, SEE SPECIFICATIONS

GATE SYMBOLS

EL VIEW PLAN VIEW

- SLUICE OR SLIDE
- BUTTERFLY
- FLAP
- SHEAR
- HAND SLIDE

KAREN A. HOOD — STATE OF WASHINGTON — 23411 — REGISTERED PROFESSIONAL ENGINEER

CH2M HILL

DSGN	D CHRISINGER
DR	DL CHRISINGER
CHK	K HOOD
APVD	K HOOD

NO.	DATE	REVISION	BY	APVD

REUSE OF DOCUMENTS
THIS DOCUMENT, AND THE IDEAS AND DESIGNS INCORPORATED HEREIN, AS AN INSTRUMENT OF PROFESSIONAL SERVICE, IS THE PROPERTY OF CH2M HILL AND IS NOT TO BE USED, IN WHOLE OR IN PART, FOR ANY OTHER PROJECT WITHOUT THE WRITTEN AUTHORIZATION OF CH2M HILL.
©CH2M HILL

BAR IS ONE INCH ON ORIGINAL DRAWING. 0 — 1" IF NOT ONE INCH ON THIS SHEET, ADJUST SCALES ACCORDINGLY.

CITY OF WENATCHEE, WASHINGTON
WASTEWATER TREATMENT PLANT IMPROVEMENTS

GENERAL DRAWINGS
GENERAL LEGENDS

DWG NO. 10-G-9
DATE NOV. 1990
PROJ. NO. SEA24579.N1

DATE: 11-4-90 DLC
DRAWN BY: M SPARLING DESIGNED BY: C. COSBY
DGN NAME: 0:/PROJ2/WENATCHE/WE020C-A.DGN

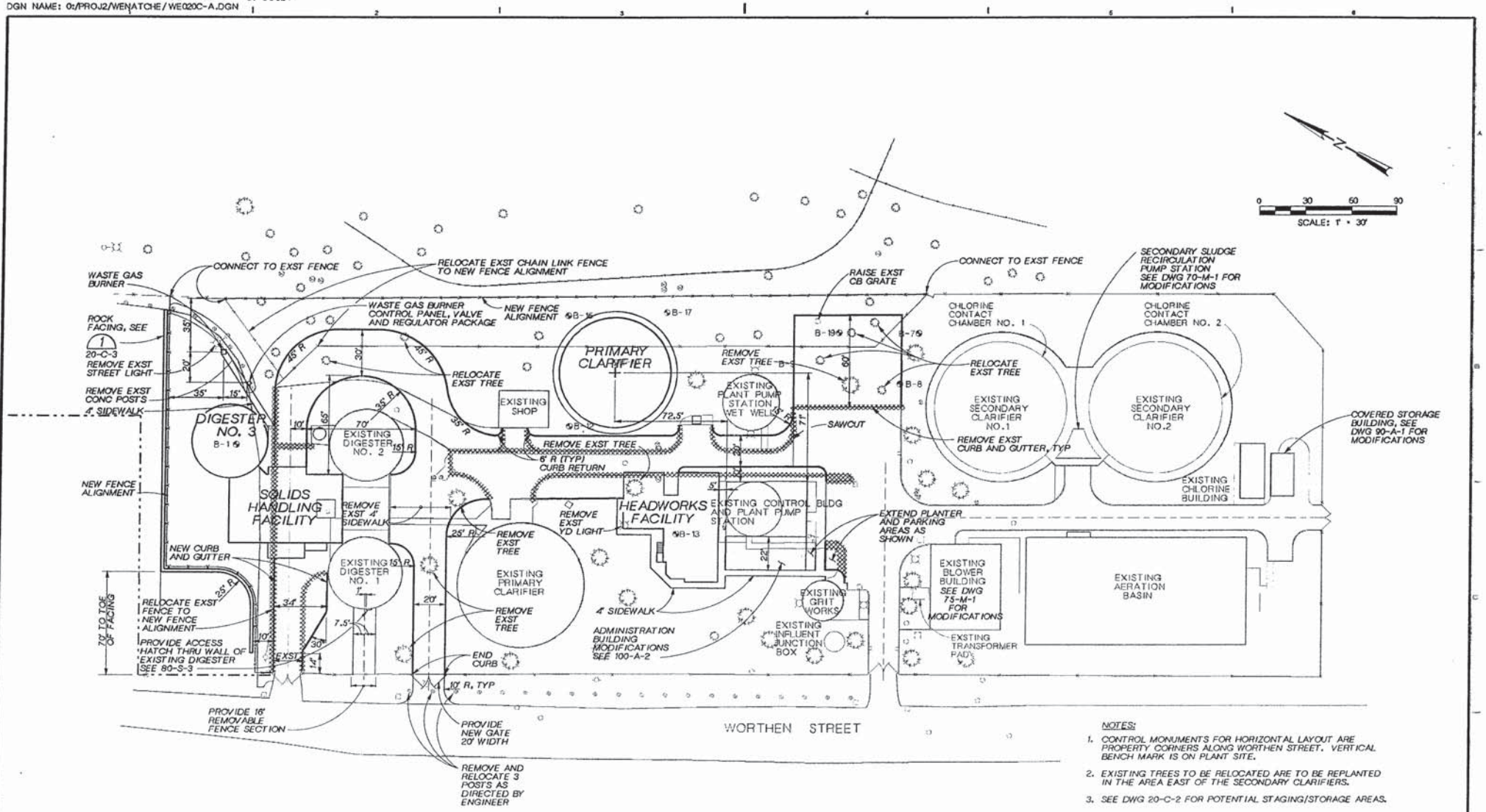

NOTES:

1. CONTROL MONUMENTS FOR HORIZONTAL LAYOUT ARE PROPERTY CORNERS ALONG WORTHEN STREET. VERTICAL BENCH MARK IS ON PLANT SITE.
2. EXISTING TREES TO BE RELOCATED ARE TO BE REPLANTED IN THE AREA EAST OF THE SECONDARY CLARIFIERS.
3. SEE DWG 20-C-2 FOR POTENTIAL STAGING/STORAGE AREAS.

KAREN A. HOOD — STATE OF WASHINGTON — REGISTERED PROFESSIONAL ENGINEER

CH2M HILL

DSGN	C. COSBY
DR	M. SPARLING
CK	J DORAN
APVD	K HOOD

NO.	DATE	REVISION	BY	APVD

REUSE OF DOCUMENTS

THIS DOCUMENT, AND THE IDEAS AND DESIGNS INCORPORATED HEREIN, AS AN INSTRUMENT OF PROFESSIONAL SERVICE, IS THE PROPERTY OF CH2M HILL AND IS NOT TO BE USED, IN WHOLE OR IN PART, FOR ANY OTHER PROJECT WITHOUT THE WRITTEN AUTHORIZATION OF CH2M HILL.
©CH2M HILL

SCALE BAR
BAR IS ONE INCH ON ORIGINAL DRAWING.
0 1"
IF NOT ONE INCH ON THIS SHEET, ADJUST SCALES ACCORDINGLY.

CITY OF WENATCHEE, WASHINGTON
WASTEWATER TREATMENT PLANT IMPROVEMENTS

SITE DRAWINGS
SITE PLAN

DWG NO. 20-C-1
DATE NOV. 1990
PROJ. NO. SEA24579.N1

DATE: 11-6-90 DLC
DRAWN BY: M. SPARLING DESIGNED BY: C. COSBY
DGN NAME: 0:/PROJ2/WENATCHE/WE020C-B.DGN

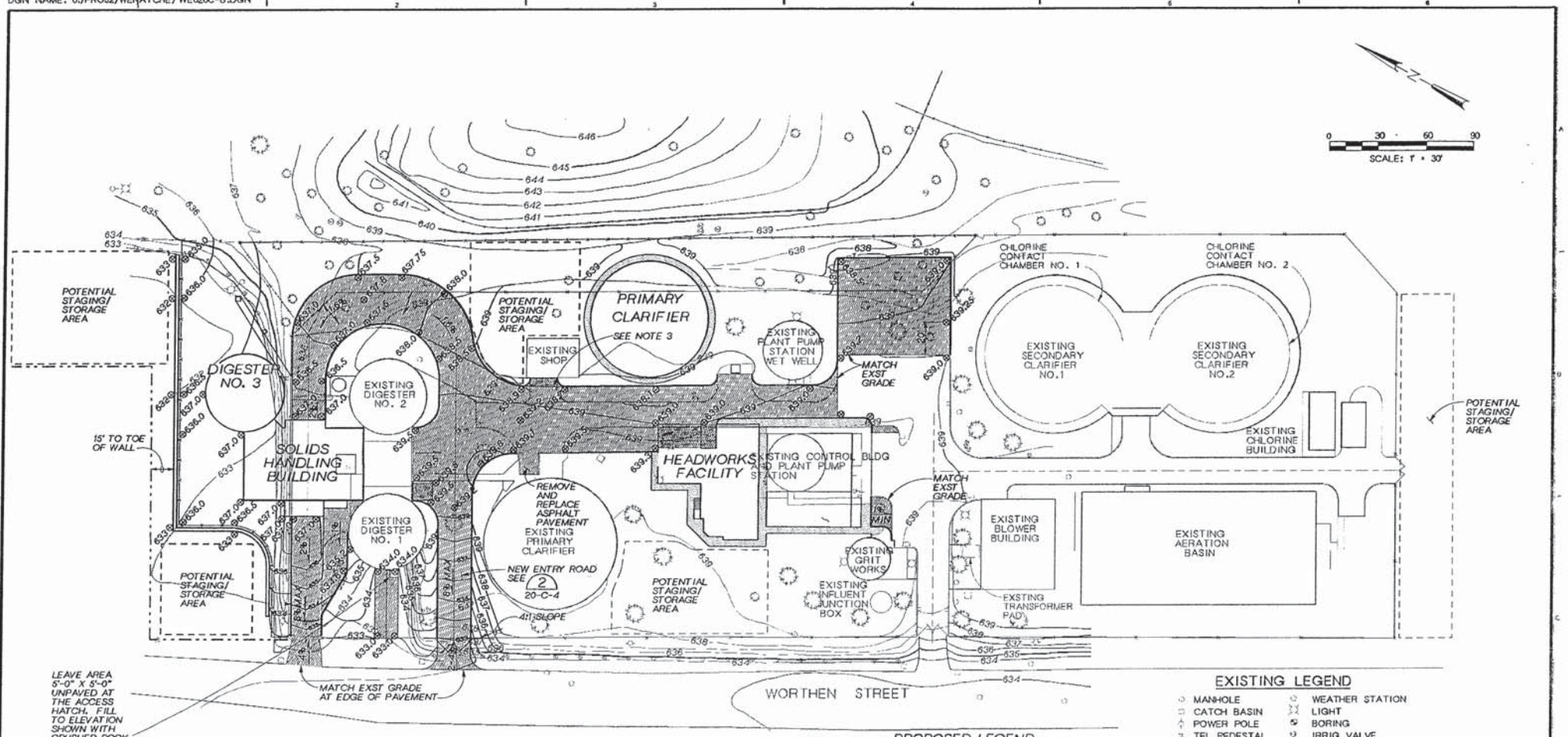

NOTES:

1. GRADE UNIFORMLY BETWEEN SPOT ELEVATIONS OR CONTOURS SHOWN.
2. PROVIDE A MINIMUM 20' VERTICAL CURVE AT GRADE CHANGES IN NEW ACCESS DRIVES.
3. MODIFY EXISTING CONCRETE BUILDING ENTRY RAMP TO ACCOMMODATE PROPOSED GRADING SCHEME.
4. AREAS ADJACENT TO FACILITIES TO BE CONSTRUCTED AND/OR MODIFIED ARE AVAILABLE FOR CONTRACTOR STAGING OR STORAGE. IF ADDITIONAL SPACE IS REQUIRED, THE CONTRACTOR SHALL BE RESPONSIBLE FOR MAKING HIS OWN ARRANGEMENTS FOR SUCH SPACE. RESTORE AREAS USED TO THEIR ORIGINAL CONDITION.
5. SEE DWG 20-C-6 FOR STORM DRAIN SYSTEM.
6. SEE DWG 20-C-3 FOR CURB AND GUTTER DETAIL.

PROPOSED LEGEND

- NEW ASPHALT PAVEMENT
- NEW CONC SLAB/ CONC PAVEMENT
- NEW SIDEWALK
- 639 NEW CONTOURS
- ELEVATION POINTS
- SLOPE (DOWN)

EXISTING LEGEND

- MANHOLE
- CATCH BASIN
- POWER POLE
- TEL PEDESTAL
- FENCE
- FIRE HYDRANT
- POST
- INLET
- FLAG POLE
- STREET LIGHT
- GUY ANCHOR
- WEATHER STATION
- LIGHT
- BORING
- IRRIG VALVE
- WATER VALVE
- WATER METER
- GAS METER
- GAS OUTLET
- TREE (6" DIA +)
- TREE (UNDER 6" DIA)

KAREN A. HOOD REGISTERED PROFESSIONAL ENGINEER

CH2M HILL

DSGN C. COSBY
DR M. SPARLING
CHK J DORAN
APVD K HOOD

NO.	DATE	REVISION	BY	APVD

REUSE OF DOCUMENTS
THIS DOCUMENT, AND THE IDEAS AND DESIGNS INCORPORATED HEREIN, AS AN INSTRUMENT OF PROFESSIONAL SERVICE, IS THE PROPERTY OF CH2M HILL AND IS NOT TO BE USED, IN WHOLE OR IN PART, FOR ANY OTHER PROJECT WITHOUT THE WRITTEN AUTHORIZATION OF CH2M HILL.
©CH2M HILL

VERIFY SCALE
BAR IS ONE INCH ON ORIGINAL DRAWING.
0 1"
IF NOT ONE INCH ON THIS SHEET, ADJUST SCALES ACCORDINGLY.

CITY OF WENATCHEE, WASHINGTON
WASTEWATER TREATMENT PLANT IMPROVEMENTS

SITE DRAWINGS
GRADING PLAN

DWG NO. 20-C-2
DATE NOV. 1990
PROJ. NO. SEA24579.N1

DATE: 11-4-90 DLC
DRAWN BY: M. SPARLING DESIGNED BY: C. COSBY
DGN NAME: O:/PROJ2/WENATCHE/WE020C-C.DGN

FRAME AND GRATE

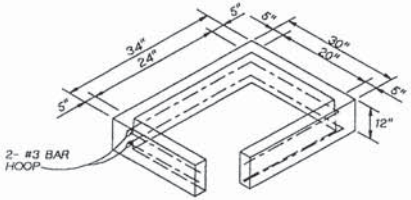

12" RISER SECTION

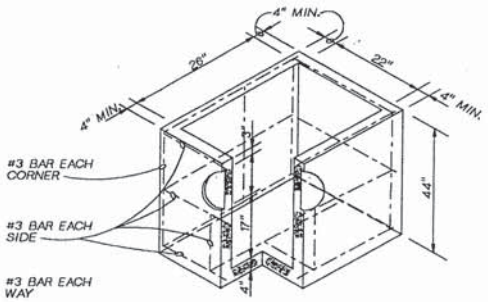

PRECAST BASE SECTION

CATCH BASIN TYPE 1 (1) 20-C-6
NTS

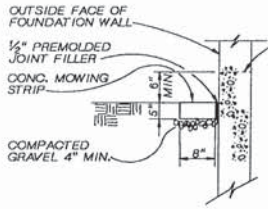

NOTE:
1. PROVIDE MOWING STRIP WHERE GRASS ABUTTS FDN WALLS OR WHERE INDICATED ON DWG 20-C-10. SEE SHEET FOR LOCATION OF GRASS AREAS.
2. PROVIDE ½" PREMOLDED EXPANSION JOINT FILLER IN THE MOWING STRIP AT NOT MORE THAN 20 FEET INTERVALS.

MOWING STRIP (2) 20-C-9
NTS

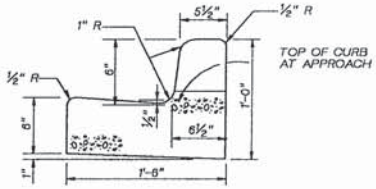

CEMENT CONCRETE CURB AND GUTTER (3) 20-C-1,4
NTS

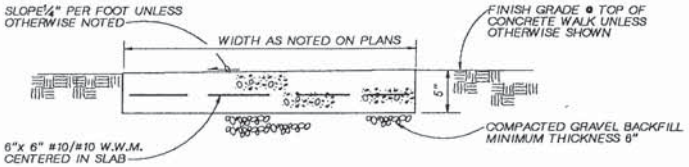

TYPICAL CONCRETE WALK

DETAIL (4) 20-C-1
NTS

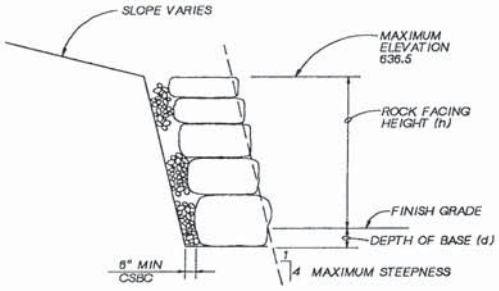

(h)	(d)	MINIMUM ROCK SIZE (BASE)	(TOP)
2 FEET	3 INCHES	2-MAN	1-MAN
4 FEET	6 INCHES	3-MAN	2-MAN
6 FEET	9 INCHES	4-MAN	2-MAN

ROCK FACING

DETAIL (5) 20-C-1
NTS

KAREN A. HOOD REGISTERED PROFESSIONAL ENGINEER

CH2M HILL

DSGN	C. COSBY
DR	M. SPARLING
CHK	J DORAN
APVD	K HOOD

NO.	DATE	REVISION	BY	APVD

REUSE OF DOCUMENTS
THIS DOCUMENT, AND THE IDEAS AND DESIGNS INCORPORATED HEREIN, AS AN INSTRUMENT OF PROFESSIONAL SERVICE, IS THE PROPERTY OF CH2M HILL AND IS NOT TO BE USED, IN WHOLE OR IN PART, FOR ANY OTHER PROJECT WITHOUT THE WRITTEN AUTHORIZATION OF CH2M HILL.
©CH2M HILL

BAR IS ONE INCH ON ORIGINAL DRAWING. 0 1"
IF NOT ONE INCH ON THIS SHEET, ADJUST SCALES ACCORDINGLY.

CITY OF WENATCHEE, WASHINGTON
WASTEWATER TREATMENT PLANT IMPROVEMENTS

SITE DRAWINGS
SITEWORK DETAILS

DWG NO. 20-C-3
DATE NOV. 1990
PROJ. NO. SEA24579.N1

DATE: 11-6-90 DLC
DRAWN BY: M. SPARLING DESIGNED BY: C. COSBY
DGN NAME: O:/PROJ2/WENATCHE/WE020C-D.DGN

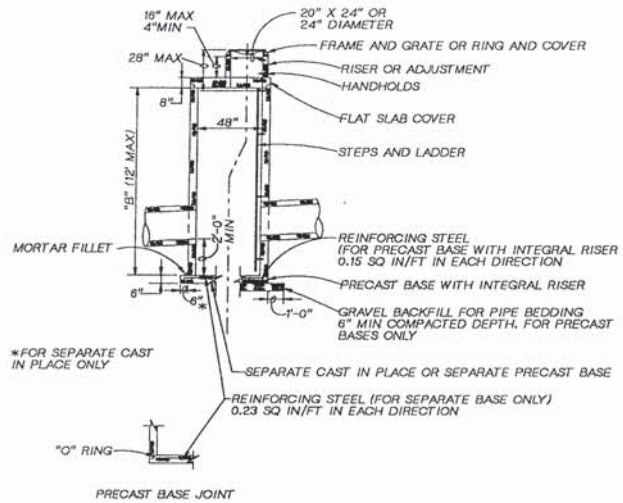

CATCH BASIN TYPE 2

DETAIL 1
NTS 20-C-6

NOTE:

EXCEPT FOR FABRIC, POST LENGTHS, AND DIMENSIONS SHOWN HERE; PROVIDE WIRE FENCE AND GATE(S) PER WSDOT STANDARD PLAN L-1, WIRE FENCE - TYPE 1.

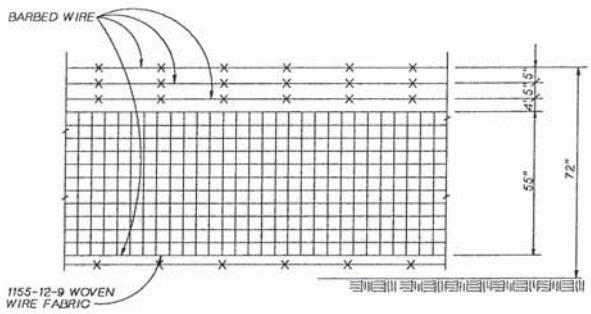

WIRE FENCE (SLUDGE DRYING BED SITE)

DETAIL 3
NTS 800-B-2

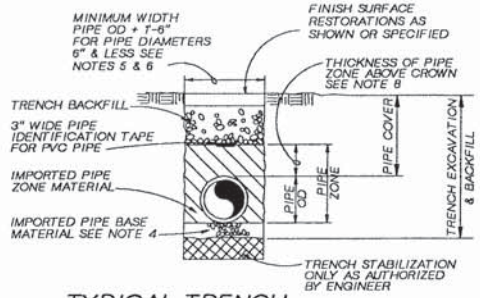

TYPICAL TRENCH
NTS

1. ACTUAL SLOPE OF TRENCH SIDES ABOVE TOP OF PIPE TO BE DETERMINED BY CONTRACTOR TO FIT METHOD OF CONSTRUCTION AND ALL SAFETY REQUIREMENTS.
2. COMPACT TRENCH BACKFILL MATERIAL AS REQUIRED BY SPECIFICATIONS.
3. TRENCHES SHALL PROVIDE SUFFICIENT SPACE TO PLACE AND COMPACT PIPE BASE AND PIPE ZONE MATERIAL AS SPECIFIED; IN ADDITION, TRENCH WIDTH SHALL BE NO LESS THAN SHOWN.
4. FOR PIPES 16 INCHES AND SMALLER PLACE 4 INCHES (MINIMUM) COMPACTED PIPE BASE. FOR PIPES 18 INCHES TO 36 INCHES, PLACE 6 INCHES (MINIMUM) PIPE BASE. FOR PIPES 42 INCHES AND LARGER PLACE 9-INCHES (MINIMUM) PIPE BASE.
5. FOR PIPES AND CONDUIT LESS THAN OR EQUAL TO 6 INCHES BUT GREATER THAN 2 INCHES IN DIAMETER, MINIMUM TRENCH WIDTH SHALL BE 18 INCHES.
6. FOR PIPES 2 INCHES AND SMALLER, MINIMUM TRENCH WIDTH SHALL BE 6 INCHES AND PIPE ZONE SHALL BE BACKFILLED AS SPECIFIED.
7. UNDER STRUCTURES, ROADS, SIDEWALKS OR PARKING AREAS, TRENCH BACKFILL SHALL BE GRANULAR BACKFILL.
8. FOR PIPES 6 INCHES AND SMALLER, THICKNESS SHALL BE 6 INCHES. FOR PIPES 8 INCHES TO 36 INCHES, THICKNESS SHALL BE 10 INCHES, FOR PIPES LARGER THAN 36 INCHES, THICKNESS SHALL BE 12 INCHES.

TYPICAL TRENCH DETAIL

DETAIL 4
NTS 20-C-6

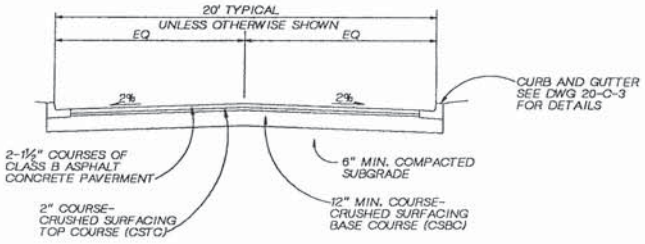

TYPICAL ROADWAY SECTION

DETAIL 2
NTS 20-C-6

KAREN A. HOOD, STATE OF WASHINGTON, REGISTERED PROFESSIONAL ENGINEER

CH2M HILL

DSGN	C. COSBY				
DR	M. SPARLING				
CHK	J. DORAN				
APVD	K. HOOD	NO.	DATE	REVISION	BY	APVD

REUSE OF DOCUMENTS
THIS DOCUMENT, AND THE IDEAS AND DESIGNS INCORPORATED HEREIN, AS AN INSTRUMENT OF PROFESSIONAL SERVICE, IS THE PROPERTY OF CH2M HILL AND IS NOT TO BE USED, IN WHOLE OR IN PART, FOR ANY OTHER PROJECT WITHOUT THE WRITTEN AUTHORIZATION OF CH2M HILL.
©CH2M HILL

BAR IS ONE INCH ON ORIGINAL DRAWING.
0 1"
IF NOT ONE INCH ON THIS SHEET, ADJUST SCALES ACCORDINGLY.

CITY OF WENATCHEE, WASHINGTON
WASTEWATER TREATMENT PLANT IMPROVEMENTS

SITE DRAWINGS
SITEWORK DETAILS

DWG NO. 20-C-4
DATE NOV. 1990
PROJ NO. SEA24579.N1

DATE: 11-7-90 DLC
DRAWN BY: M. SPARLING DESIGNED BY: D. TAKASUMI
DGN NAME: O:/PROJ2/WENATCHE/WE020C-E.DGN

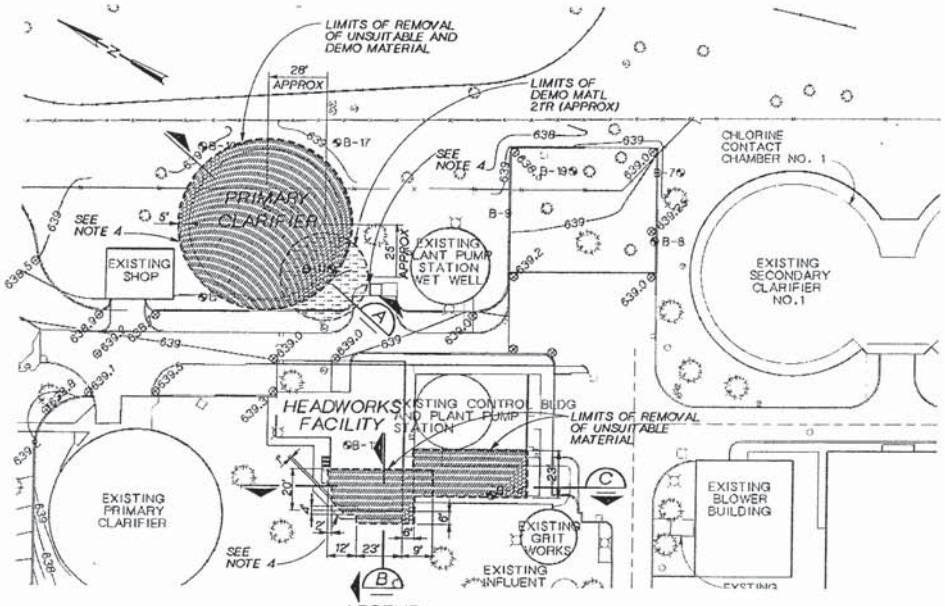

LEGEND

- AREA OF UNSUITABLE MATERIAL
- AREA OF DEMOLITION MATERIAL
- LIMITS OF REMOVAL
- 639 NEW CONTOURS
- ⊗ ELEVATION POINTS

EXCAVATION PLAN

1" = 30'

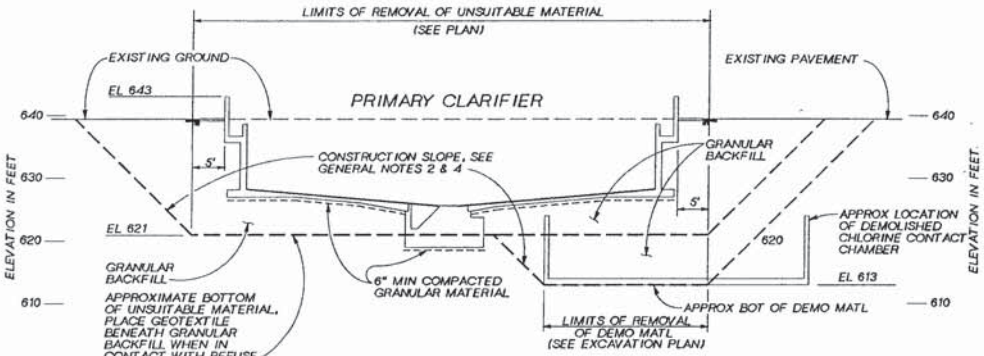

SECTION A

1" = 10'

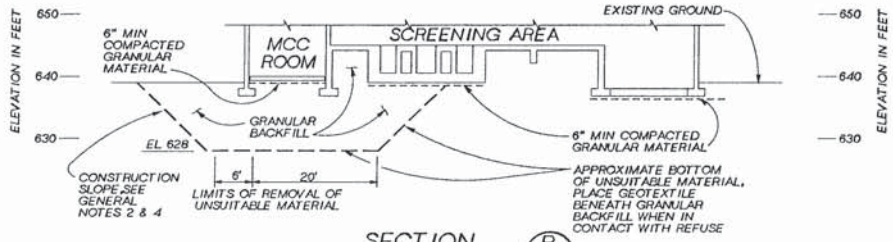

SECTION B

1" = 10'

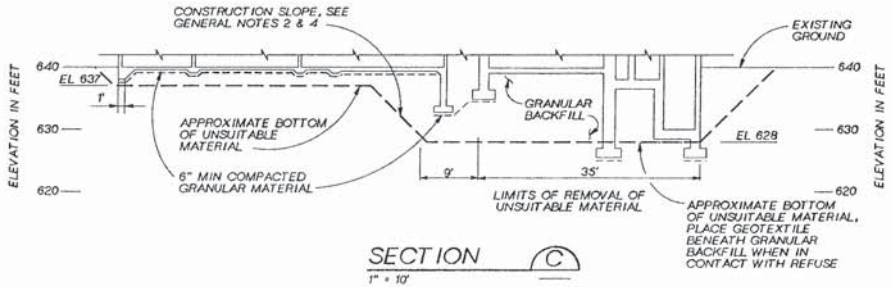

SECTION C

1" = 10'

GENERAL NOTES:

1. THE INFORMATION CONTAINED ON THIS DRAWING IS INTENDED TO PROVIDE SIMPLIFIED CROSS SECTIONS OF THE PROJECT SITE, FOR THE PURPOSE OF ILLUSTRATING GENERAL EXCAVATION AND BACKFILL REQUIREMENTS. FOR REASONS OF CLARITY, MANY STRUCTURAL AND SITE DETAILS ARE NOT SHOWN. THE OUTLINE OF STRUCTURES SHOULD BE REGARDED AS GENERAL AND APPROXIMATE. THE EXCAVATION SUBGRADES SHOWN SHOULD ALSO BE REGARDED AS GENERAL AND MAY NOT REFLECT ALL EXCAVATION THAT WILL BE NEEDED FOR FOUNDATION CONSTRUCTION. REFER TO APPROPRIATE STRUCTURAL DRAWINGS FOR ALL FOUNDATION DETAILS AND INFORMATION NECESSARY TO DETERMINE MINMUM EXCAVATION SUBGRADES. REFER TO SITE GRADING DRAWINGS FOR FINISHED GRADES.
2. EXCAVATION SIDE SLOPES ARE SHOWN SOLELY FOR THE PURPOSE OF ILLUSTRATION BACKFILLING REQUIREMENTS. BY SHOWING SUCH SLOPES, THE ENGINEER DOES NOT INTEND TO IMPLY ANY PARTICULAR SLOPE IS TO BE USED OR WOULD BE STABLE. THE CONTRACTOR IS RESPONSIBLE FOR SELECTING AND MAINTAINING SAFE TEMPORARY EXCAVATION SLOPES. FOR EXCAVATION SLOPES BENEATH FOUNDATIONS, SLOPE AT SAFE SLOPE OF 1 HORIZONTAL TO 1 VERTICAL OR FLATTER.
3. EXCAVATION LIMITS REFERENCED TO NEW STRUCTURES ARE MEASURED FROM THE OUTSIDE FACE OF THE STRUCTURE.
4. CONTRACTOR SHALL PROVIDE TEMPORARY EARTH SUPPORT SYSTEM, SAFE SLOPING, OR OTHER MEANS TO PROTECT AND MAINTAIN THE EXISTING FACILITIES. SUBMIT INFORMATION DETAILING HOW PROTECTION WILL BE PROVIDED. REPAIR ALL FACILITIES DAMAGED BY THE CONTRACTOR AT THE CONTRACTOR'S SOLE EXPENSE.

KAREN A. HOOD REGISTERED PROFESSIONAL ENGINEER

CH2M HILL

DSGN	D. TAKASUMI				
DR	M. SPARLING				
CHK	V RYBEL				
APVD	K HOOD	NO.	DATE	REVISION	BY / APVD

REUSE OF DOCUMENTS
THIS DOCUMENT, AND THE IDEAS AND DESIGNS INCORPORATED HEREIN, AS AN INSTRUMENT OF PROFESSIONAL SERVICE, IS THE PROPERTY OF CH2M HILL AND IS NOT TO BE USED, IN WHOLE OR IN PART, FOR ANY OTHER PROJECT WITHOUT THE WRITTEN AUTHORIZATION OF CH2M HILL.
©CH2M HILL

VERIFY SCALE
BAR IS ONE INCH ON ORIGINAL DRAWING.
0 1"
IF NOT ONE INCH ON THIS SHEET, ADJUST SCALES ACCORDINGLY.

CITY OF WENATCHEE, WASHINGTON
WASTEWATER TREATMENT PLANT IMPROVEMENTS

SITE WORK / CIVIL
EXCAVATION PLAN AND SECTIONS

DWG NO. 20-C-5
DATE NOV. 1990
PROJ NO. SEA24579.N1

DATE: 10-31-90 DLC
DRAWN BY: DL CHRISINGER DESIGNED BY: G. SAKAGAWA
DGN NAME: O:/PROJ2/WENATCHE/WE020C-F.DGN

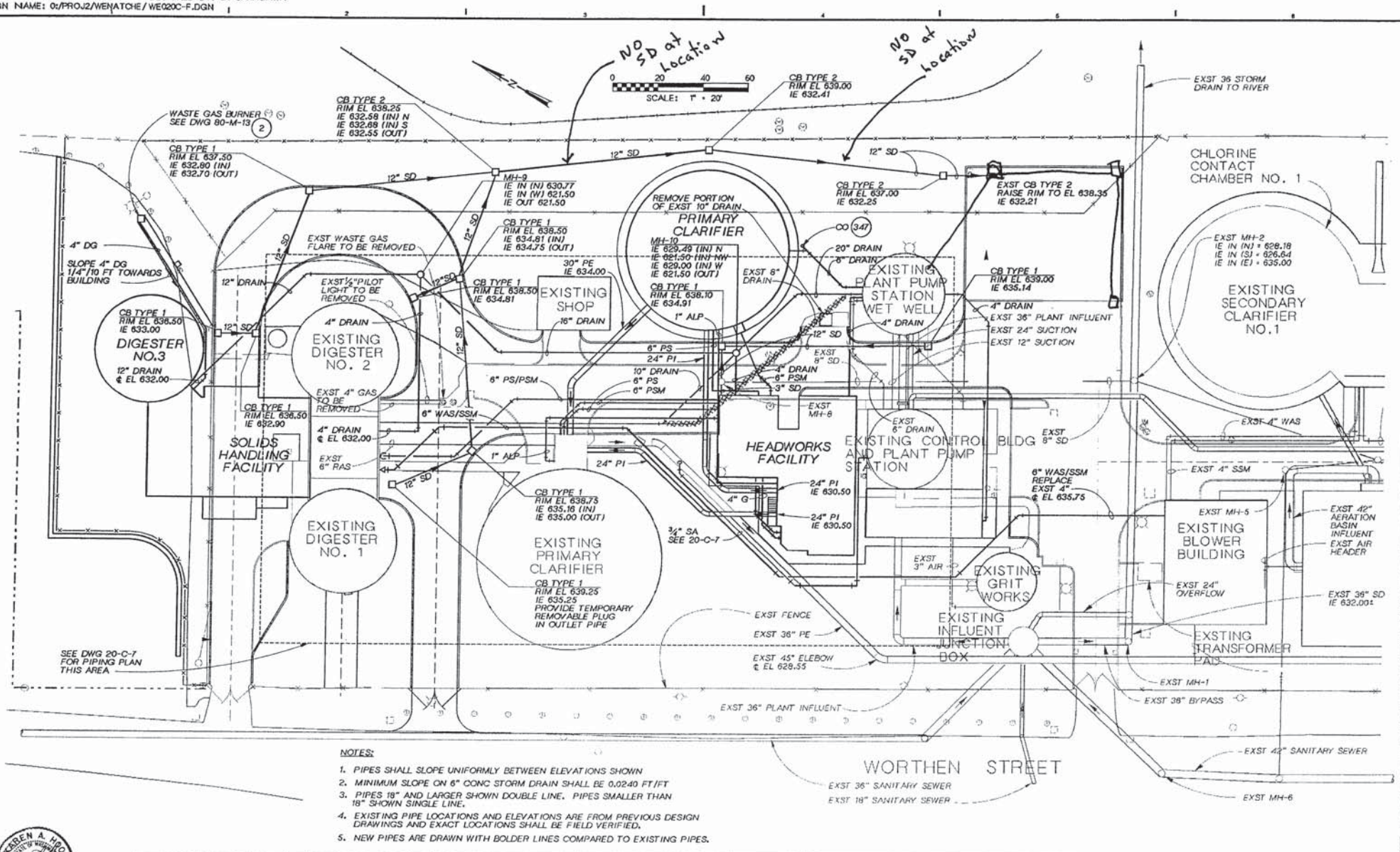

NOTES:

1. PIPES SHALL SLOPE UNIFORMLY BETWEEN ELEVATIONS SHOWN
2. MINIMUM SLOPE ON 6" CONC STORM DRAIN SHALL BE 0.0240 FT/FT
3. PIPES 18" AND LARGER SHOWN DOUBLE LINE. PIPES SMALLER THAN 18" SHOWN SINGLE LINE.
4. EXISTING PIPE LOCATIONS AND ELEVATIONS ARE FROM PREVIOUS DESIGN DRAWINGS AND EXACT LOCATIONS SHALL BE FIELD VERIFIED.
5. NEW PIPES ARE DRAWN WITH BOLDER LINES COMPARED TO EXISTING PIPES.

LARSEN A. HOOD — STATE OF WASHINGTON — 23411 — REGISTERED PROFESSIONAL ENGINEER

CH2M HILL

DSGN	G. SAKAGAWA
DR	M. SPARLING
CHK	R STAEHLIN
APVD	K HOOD

NO.	DATE	REVISION	BY	APVD

REUSE OF DOCUMENTS
THIS DOCUMENT, AND THE IDEAS AND DESIGNS INCORPORATED HEREIN, AS AN INSTRUMENT OF PROFESSIONAL SERVICE, IS THE PROPERTY OF CH2M HILL AND IS NOT TO BE USED, IN WHOLE OR IN PART, FOR ANY OTHER PROJECT WITHOUT THE WRITTEN AUTHORIZATION OF CH2M HILL.
©CH2M HILL

SCALE: BAR IS ONE INCH ON ORIGINAL DRAWING. 0 1" IF NOT ONE INCH ON THIS SHEET, ADJUST SCALES ACCORDINGLY.

CITY OF WENATCHEE, WASHINGTON
WASTEWATER TREATMENT PLANT IMPROVEMENTS

SITE WORK / CIVIL
YARD PIPING

DWG NO. 20-C-6
DATE NOV. 1990
PROJ NO. SEA24579.N1

DATE: 10-31-90 DLC
DRAWN BY: M. SPARLING DESIGNED BY: C. COSBY
DGN NAME: 0:/PROJ2/WENATCHE/WE020C-G.DGN

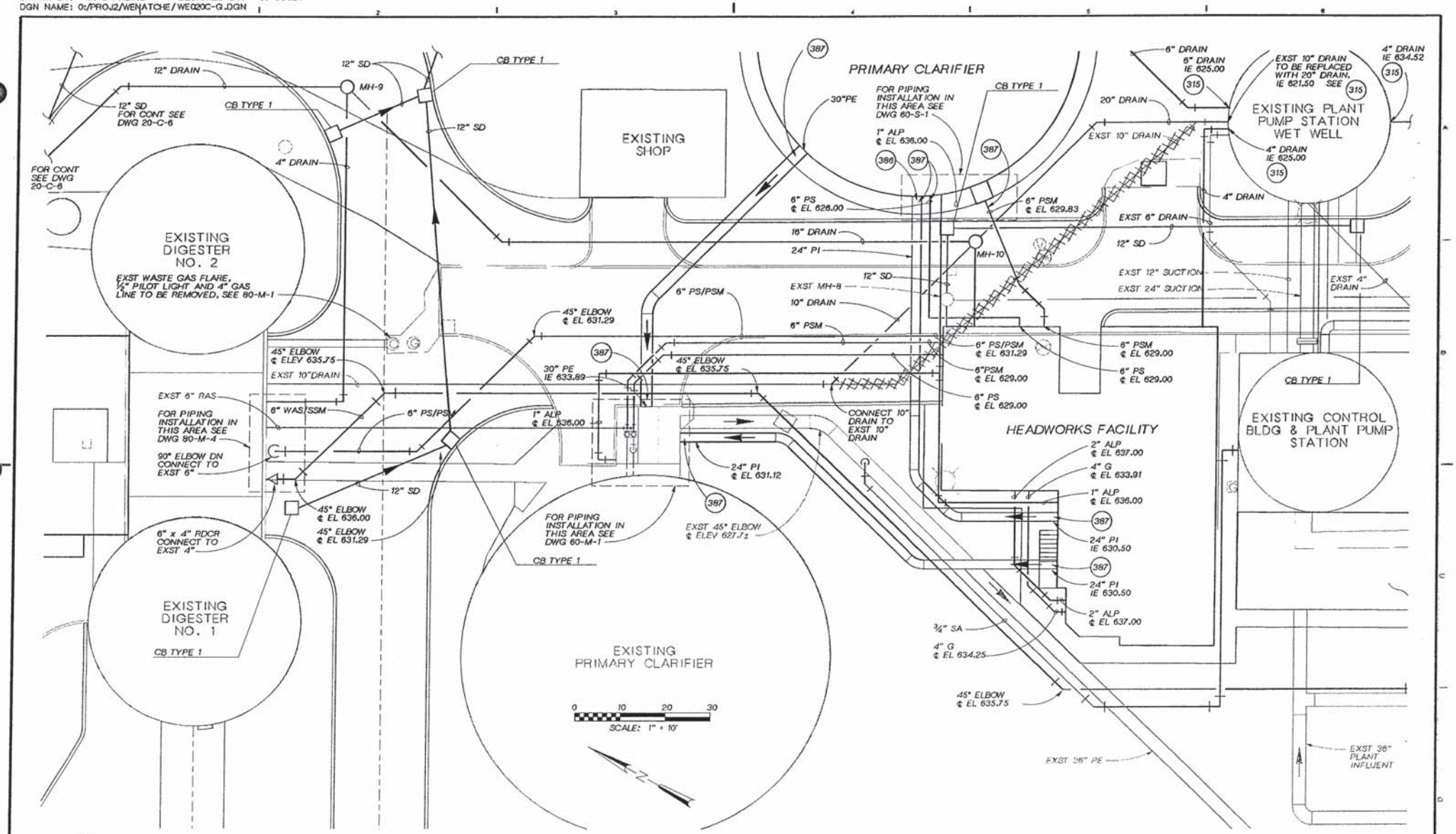

DSGN C. COSBY					
DR M. SPARLING					
CHK R. STAEHLIN					
APVD K HOOD	NO.	DATE	REVISION	BY	APVD

CH2M HILL

REUSE OF DOCUMENTS
THIS DOCUMENT, AND THE IDEAS AND DESIGNS INCORPORATED HEREIN, AS AN INSTRUMENT OF PROFESSIONAL SERVICE, IS THE PROPERTY OF CH2M HILL AND IS NOT TO BE USED, IN WHOLE OR IN PART, FOR ANY OTHER PROJECT WITHOUT THE WRITTEN AUTHORIZATION OF CH2M HILL.
©CH2M HILL

VERIFY SCALE
BAR IS ONE INCH ON ORIGINAL DRAWING.
0 1"
IF NOT ONE INCH ON THIS SHEET, ADJUST SCALES ACCORDINGLY.

CITY OF WENATCHEE, WASHINGTON
WASTEWATER TREATMENT PLANT IMPROVEMENTS

SITE WORK / CIVIL
AREA PIPING PLAN

DWG NO. 20-C-7
DATE NOV. 1990
PROJ. NO. SEA24579.N1

DRAWN BY: M. SPARLING DESIGNED BY: G. SAKAGAWA
DGN NAME: 0:/PROJ2/WENATCHE/WE020C-K.DGN

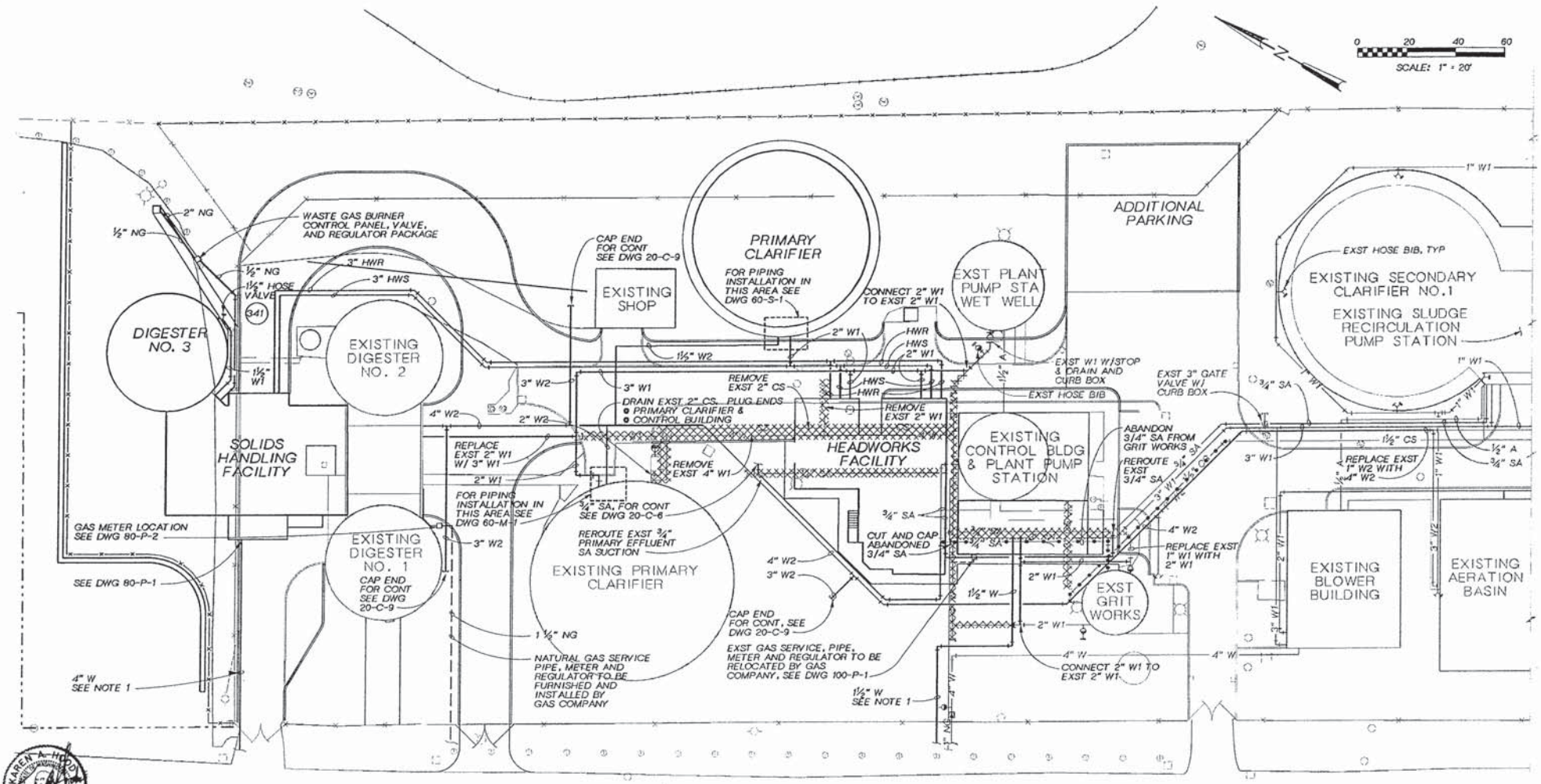

NOTES:

1. NEW WATER SERVICE SHALL BE INSTALLED BY THE CITY OF WENATCHEE WATER DEPARTMENT FROM THE MAIN TO 5'-0" OUTSIDE OF THE BUILDING RECEIVING SERVICE LINE.
2. NEW PIPES ARE DRAWN WITH BOLDER LINES COMPARED TO EXISTING PIPE.

CH2M HILL

DSGN	G SAKAGAWA
DR	M SPARLING
CHK	R STAEHLIN
APVD	K HOOD

NO.	DATE	REVISION	BY	APVD

REUSE OF DOCUMENTS
THIS DOCUMENT, AND THE IDEAS AND DESIGNS INCORPORATED HEREIN, AS AN INSTRUMENT OF PROFESSIONAL SERVICE, IS THE PROPERTY OF CH2M HILL AND IS NOT TO BE USED, IN WHOLE OR IN PART, FOR ANY OTHER PROJECT WITHOUT THE WRITTEN AUTHORIZATION OF CH2M HILL.
©CH2M HILL

VERIFY SCALE
BAR IS ONE INCH ON ORIGINAL DRAWING.
0 1"
IF NOT ONE INCH ON THIS SHEET, ADJUST SCALES ACCORDINGLY.

CITY OF WENATCHEE, WASHINGTON
WASTEWATER TREATMENT PLANT IMPROVEMENTS

SITE WORK / CIVIL
WATER, NONPOTABLE WATER AND MISCELLANEOUS PLUMBING PLAN

DWG NO. 20-C-8
DATE NOV. 1990
PROJ. NO. SEA24579.N1

DRAWN BY: DL CHRISINGER DESIGNED BY: JAMES IRISH
DGN NAME: 0:/PROJ2/WENATCHE/WE020C-1.DGN

NOTE:

CONTRACTOR SHALL DESIGN AND INSTALL IRRIGATION SYSTEM AS SPECIFIED. DESIGN OF IRRIGATION SYSTEM SHALL BE APPROVED BY THE CITY AND THE ENGINEER BEFORE INSTALLATION CAN BEGIN.

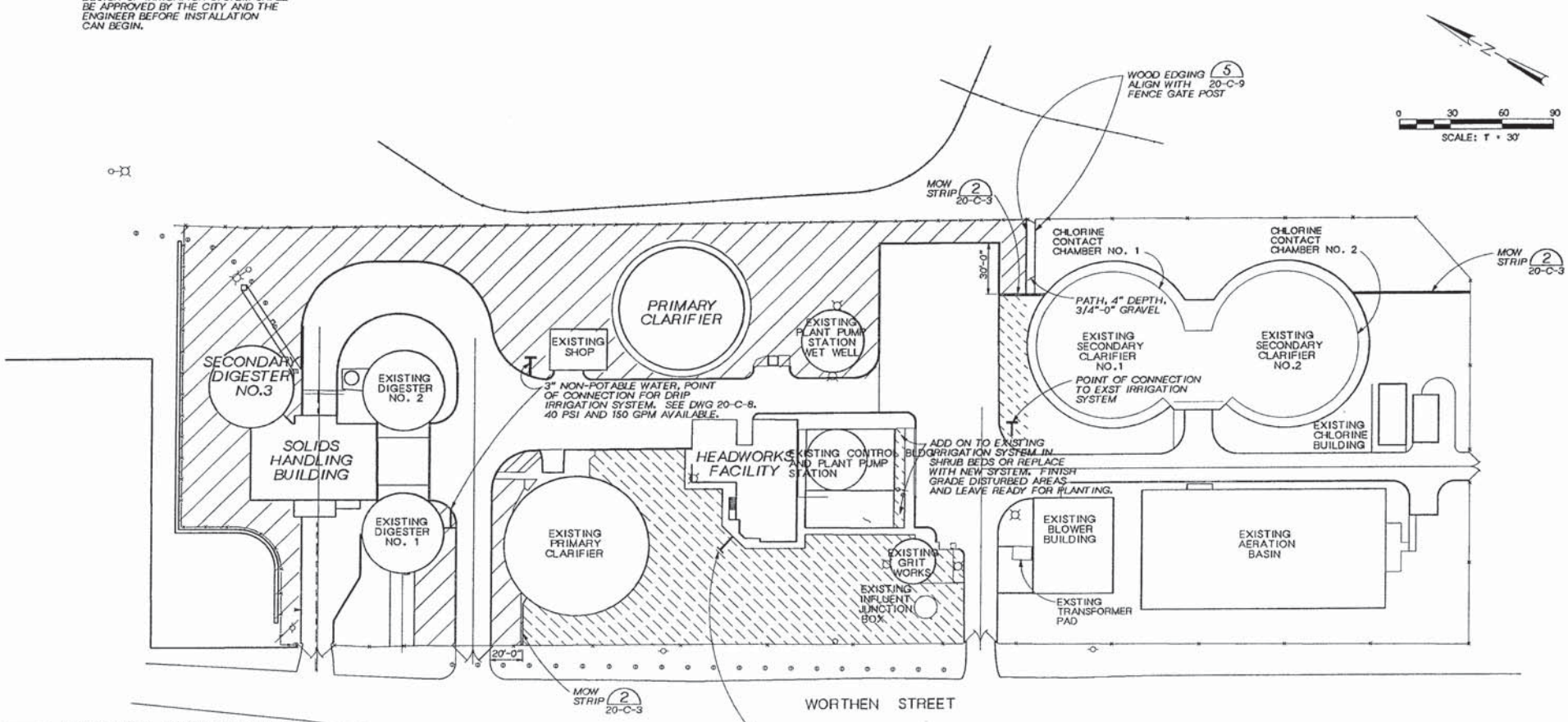

PROVIDE TOPSOIL, FINISH GRADE AND LEAVE READY FOR PLANTING AS SPECIFIED. REMOVE EXISTING SPRAY IRRIGATION SYSTEM AND PROVIDE DRIP IRRIGATION SYSTEM AS SPECIFIED.

PROVIDE TOPSOIL, FINISH GRADE AND SEED LAWN AS SPECIFIED IN ALL AREAS DISTURBED DURING CONSTRUCTION. PROVIDE NEW SPRAY IRRIGATION SYSTEM AS REQUIRED PER SPECIFICATIONS.

UNDISTURBED AREA, ANY DISTURBANCE TO EXISTING LAWN, LANDSCAPING, OR IRRIGATION TO BE REPLACED IN KIND BY CONTRACTOR.

KAREN A. HOOD — STATE OF WASHINGTON — REGISTERED PROFESSIONAL ENGINEER

CH2M HILL

DSGN	J IRISH
DR	DL CHRISINGER
CHK	R STAEHLIN
APVD	K HOOD

NO.	DATE	REVISION	BY	APVD

REUSE OF DOCUMENTS
THIS DOCUMENT, AND THE IDEAS AND DESIGNS INCORPORATED HEREIN, AS AN INSTRUMENT OF PROFESSIONAL SERVICE, IS THE PROPERTY OF CH2M HILL AND IS NOT TO BE USED, IN WHOLE OR IN PART, FOR ANY OTHER PROJECT WITHOUT THE WRITTEN AUTHORIZATION OF CH2M HILL.
©CH2M HILL

VERIFY SCALE
BAR IS ONE INCH ON ORIGINAL DRAWING.
0 1"
IF NOT ONE INCH ON THIS SHEET, ADJUST SCALES ACCORDINGLY.

CITY OF WENATCHEE, WASHINGTON
WASTEWATER TREATMENT PLANT IMPROVEMENTS

SITE WORK/CIVIL
FINISH GRADING, LAWN AND IRRIGATION PLAN

DWG NO. 20-C-9
DATE NOV. 1990
PROJ. NO. SEA24579.N1

DRAWN BY: J. IRISH DESIGNED BY: J. IRISH
DGN NAME: 0:/PROJ2/WENATCHE/

NOTES:
1. PROVIDE 3" BARK MULCH IN PLANTING BEDS.
2. PLANT STRAWBERRIES WITH CROWN ABOVE SOIL LEVEL.

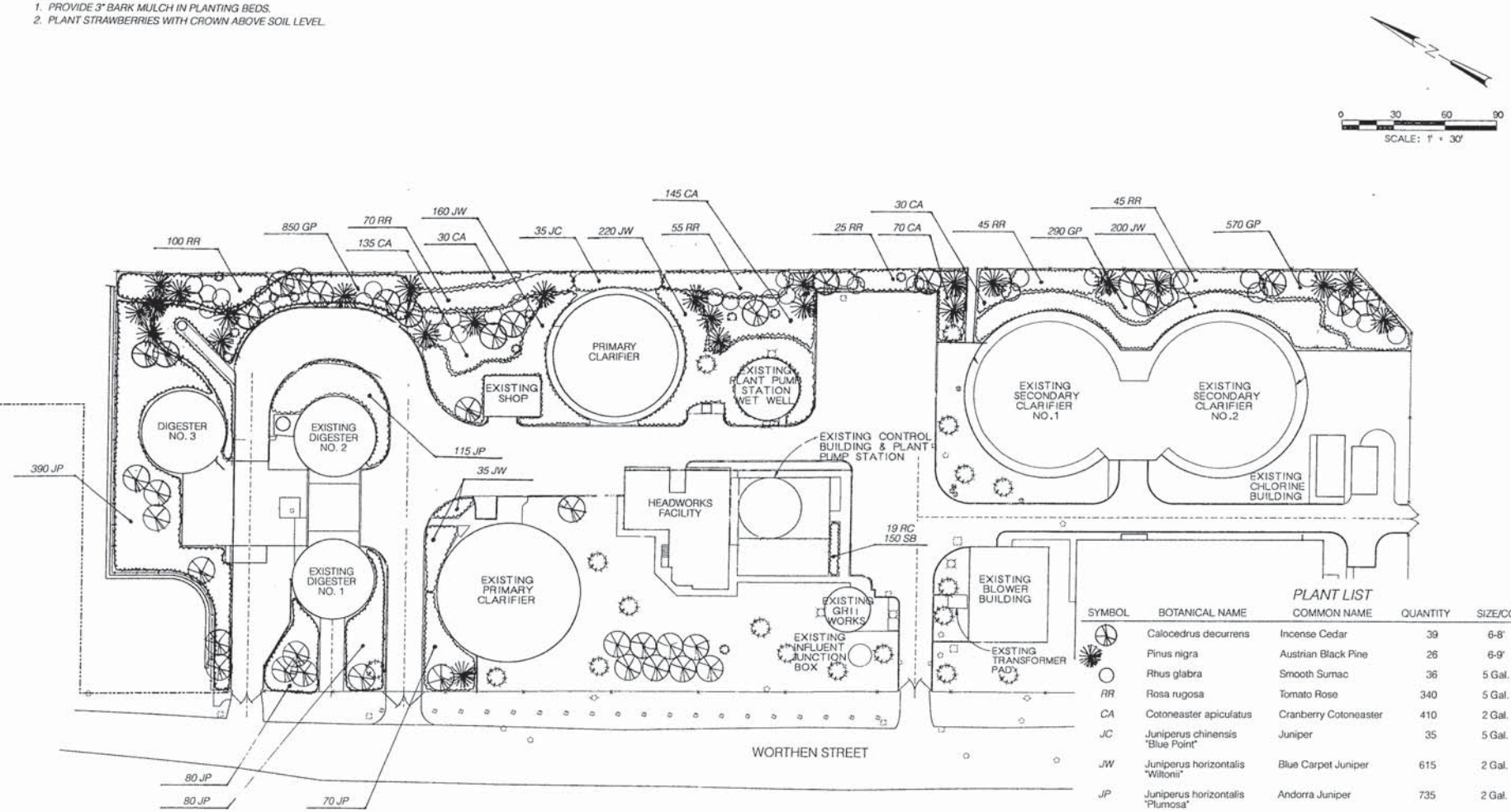

PLANT LIST

SYMBOL	BOTANICAL NAME	COMMON NAME	QUANTITY	SIZE/CONDITION	
	Calocedrus decurrens	Incense Cedar	39	6-8'	B & B
	Pinus nigra	Austrian Black Pine	26	6-9'	B & B
	Rhus glabra	Smooth Sumac	36	5 Gal.	
RR	Rosa rugosa	Tomato Rose	340	5 Gal.	4' O.C.
CA	Cotoneaster apiculatus	Cranberry Cotoneaster	410	2 Gal.	4' O.C.
JC	Juniperus chinensis "Blue Point"	Juniper	35	5 Gal.	4' O.C.
JW	Juniperus horizontalis "Wiltonii"	Blue Carpet Juniper	615	2 Gal.	4' O.C.
JP	Juniperus horizontalis "Plumosa"	Andorra Juniper	735	2 Gal.	4' O.C.
GP	Genista pilosa	Creeping Broom	1,710	1 Gal.	2' O.C.
RC	Rosa "Chrysler Imperial"	Rose	19		3' O.C.
SB	Fragaria sp. "Quinault"	Common Strawberry	150	Bare Root	1' O.C.
	Existing Tree 6" Ø +				
	Existing Tree 6" Ø -				

KAREN A. HOOD — STATE OF WASHINGTON — 20411 — REGISTERED PROFESSIONAL ENGINEER

CH2M HILL

DSGN	IRISH			
DR	IRISH			
CHK	R. STAEHLIN			
APVD	K. HOOD	NO.	DATE	REVISION	BY	APVD

REUSE OF DOCUMENTS
THIS DOCUMENT, AND THE IDEAS AND DESIGNS INCORPORATED HEREIN, AS AN INSTRUMENT OF PROFESSIONAL SERVICE, IS THE PROPERTY OF CH2M HILL AND IS NOT TO BE USED, IN WHOLE OR IN PART, FOR ANY OTHER PROJECT WITHOUT THE WRITTEN AUTHORIZATION OF CH2M HILL.
© CH2M HILL

VERIFY SCALE
BAR IS ONE INCH ON ORIGINAL DRAWING.
0 1"
IF NOT ONE INCH ON THIS SHEET, ADJUST SCALES ACCORDINGLY.

CITY OF WENATCHEE, WASHINGTON
WASTEWATER TREATMENT PLANT IMPROVEMENTS

SITE WORK/CIVIL
PLANTING PLAN

DWG NO. 20-C-10
DATE NOV. 1990
PROJ. NO. SEA24579.N1

DATE: 11-7-90 DLC
DRAWN BY: DL CHRISINGER DESIGNED BY: J IRISH
DGN NAME: O:/PROJ2/WENATCHE/WE020C-J.DGN

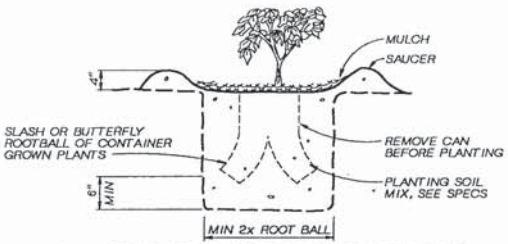

PLANTING SHRUBS FROM CONTAINER
NTS

NOTES:
1. IN BEDS, PLANTING SOIL SHALL BE 100% PLANTING SOIL MIX AS SPECIFIED.
2. OUTSIDE BEDS, PLANTING SOIL SHALL BE 50/50 PLANTING SOIL MIX AND NATIVE SOIL.

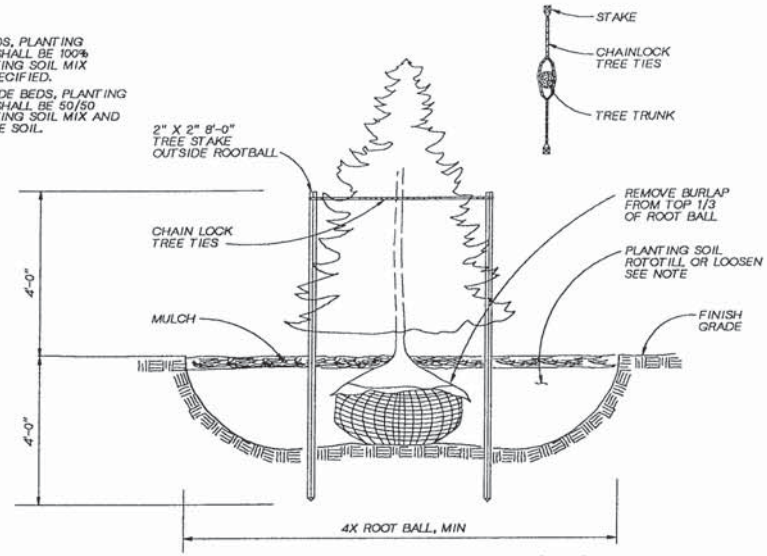

EVERGREEN TREE PLANTING
NTS

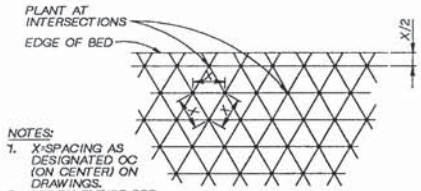

NOTES:
1. X=SPACING AS DESIGNATED OC (ON CENTER) ON DRAWINGS.
2. MULCH ENTIRE BED AFTER PLANTING.

PLANT SPACING
NTS

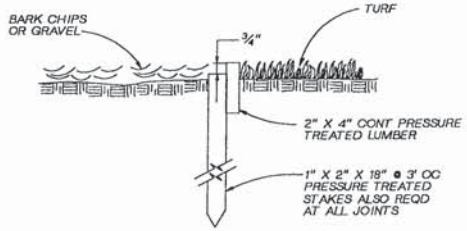

GROUND COVER PLANTING
NTS

WOOD EDGING 1
20-C-9

CH2M HILL

DSGN	J IRISH
DR	DL CHRISINGER
CHK	R STAEHLIN
APVD	K HOOD

NO.	DATE	REVISION	BY	APVD

REUSE OF DOCUMENTS
THIS DOCUMENT, AND THE IDEAS AND DESIGNS INCORPORATED HEREIN, AS AN INSTRUMENT OF PROFESSIONAL SERVICE, IS THE PROPERTY OF CH2M HILL AND IS NOT TO BE USED, IN WHOLE OR IN PART, FOR ANY OTHER PROJECT WITHOUT THE WRITTEN AUTHORIZATION OF CH2M HILL.
©CH2M HILL

BAR IS ONE INCH ON ORIGINAL DRAWING.
0 1"
IF NOT ONE INCH ON THIS SHEET, ADJUST SCALES ACCORDINGLY.

CITY OF WENATCHEE, WASHINGTON
WASTEWATER TREATMENT PLANT IMPROVEMENTS

CIVIL/SITEWORK
PLANTING DETAILS

DWG NO. 20-C-11
DATE NOV. 1990
PROJ NO. SEA24579.N1

DATE: 11-06-90
DRAWN BY: BBL DESIGNED BY: C. LONGMATE
DGN NAME: 0:/PROJ2/WENATCHE/WE050A-A.DGN

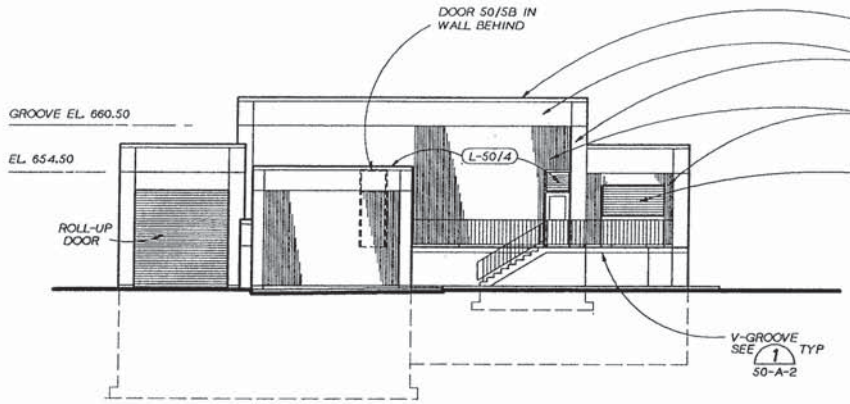

NORTH ELEVATION
1/8"=1'-0"

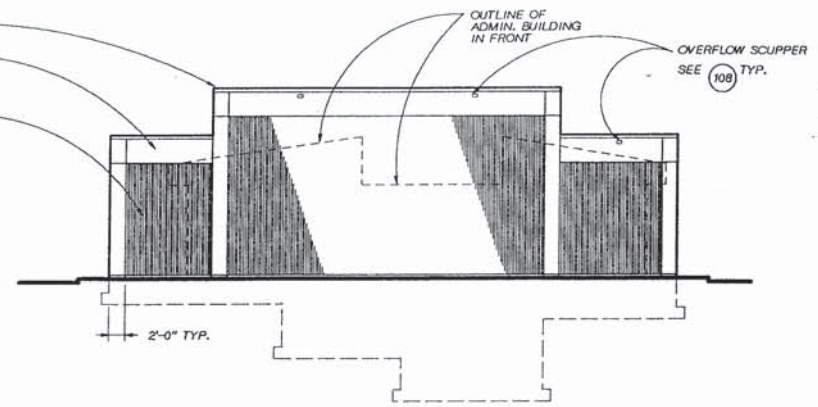

SOUTH ELEVATION
1/8"=1'-0"

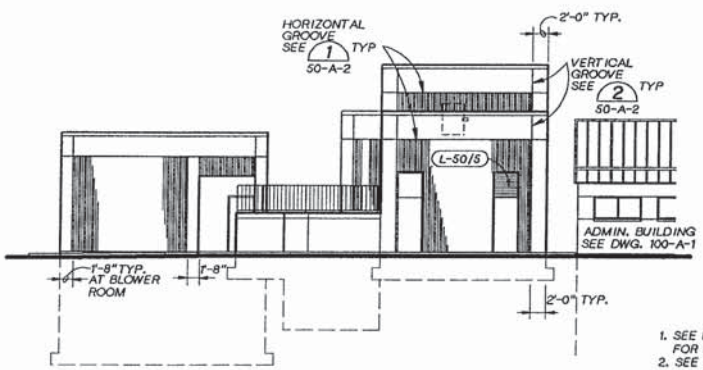

WEST ELEVATION
1/8"=1'-0"

NOTES:

1. SEE DRAWINGS 50-S-1 AND 50-S-2 FOR FLOOR PLANS.
2. SEE DRAWING 50-A-2 FOR GENERAL NOTES & BUILDING CODE NOTES
3. SEE DRAWING 250-D-3 FOR LOUVER & VENT SCHEDULE.

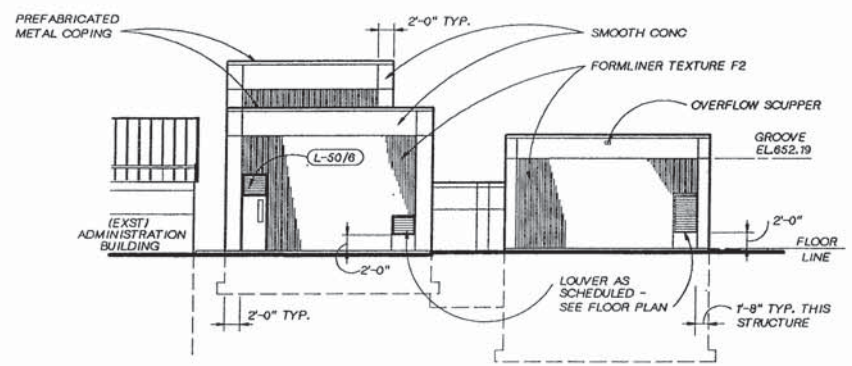

EAST ELEVATION
1/8"=1'-0"

REGISTERED ARCHITECT JOHN O. HANSEN STATE OF WASHINGTON

CH2M HILL

DSGN	J. HANSEN
DR	R. FRIBERG
CHK	C.FILANOWITZ
APVD	K. HOOD

NO.	DATE	REVISION	BY	APVD

REUSE OF DOCUMENTS
THIS DOCUMENT, AND THE IDEAS AND DESIGNS INCORPORATED HEREIN, AS AN INSTRUMENT OF PROFESSIONAL SERVICE, IS THE PROPERTY OF CH2M HILL AND IS NOT TO BE USED, IN WHOLE OR IN PART, FOR ANY OTHER PROJECT WITHOUT THE WRITTEN AUTHORIZATION OF CH2M HILL.
©CH2M HILL

BAR IS ONE INCH ON ORIGINAL DRAWING. 0 1"
IF NOT ONE INCH ON THIS SHEET, ADJUST SCALES ACCORDINGLY.

CITY OF WENATCHEE, WASHINGTON
WASTEWATER TREATMENT PLANT IMPROVEMENTS

HEADWORKS
ARCHITECTURAL ELEVATIONS

DWG NO. 50-A-1
DATE NOV. 1990
PROJ NO. SEA24579.N1

DATE: 11-06-90
DRAWN BY: BBL DESIGNED BY: J. HANSEN
DGN NAME: 0:/PROJ2/WENATCHE/WE050A-8.DGN

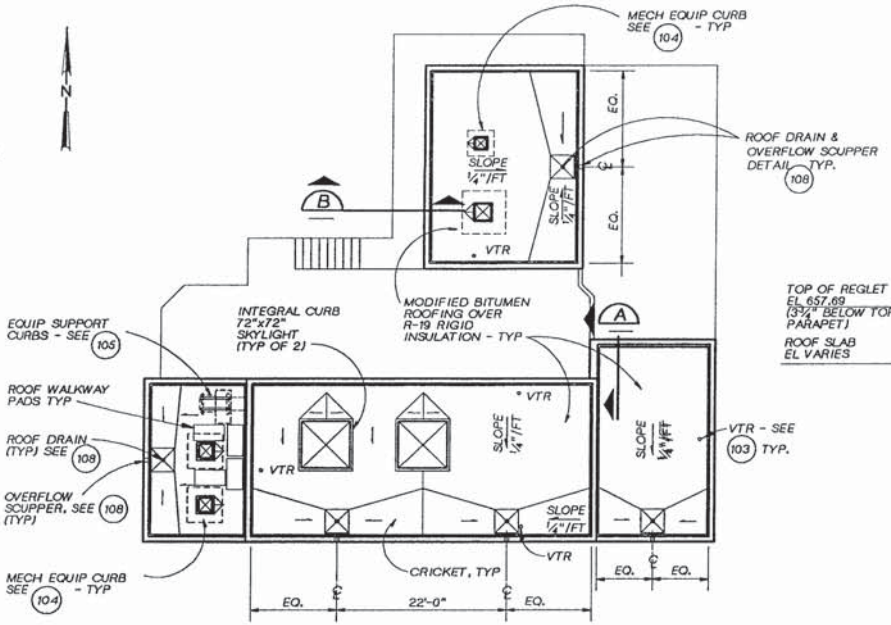

ROOF PLAN
1/8" = 1'-0"

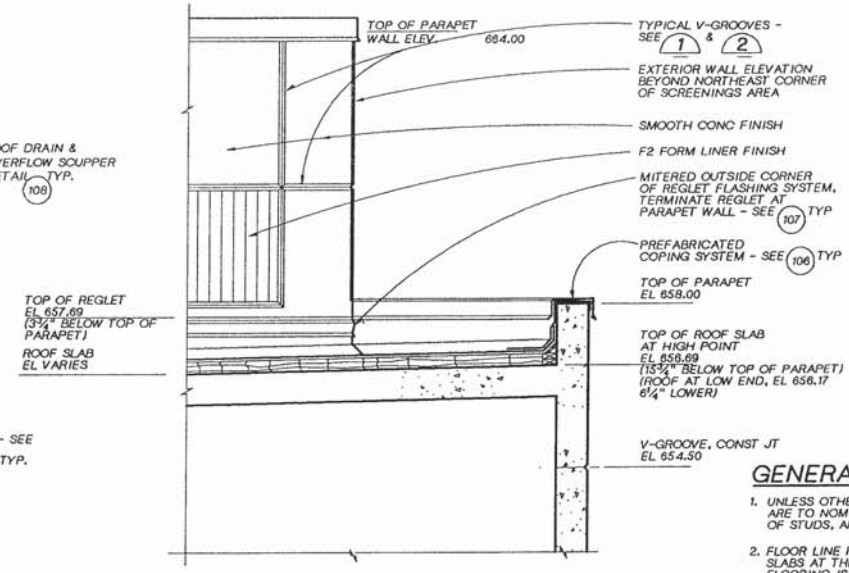

SECTION A
3/4" = 1'-0"

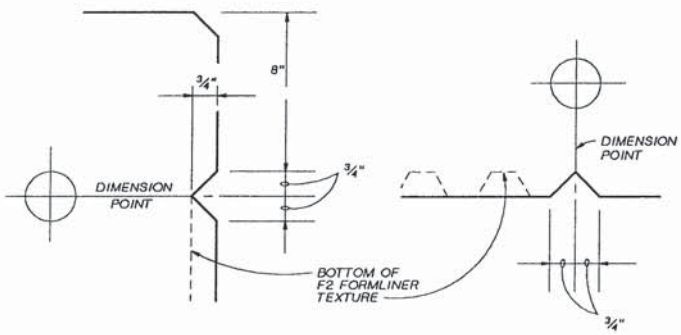

HORIZ GROOVE DET 1
HALF FULL SIZE
50-A-1
80-S-1
80-A-1

VERT GROOVE DET 2
HALF FULL SIZE
50-A-1
80-A-1
60-S-1

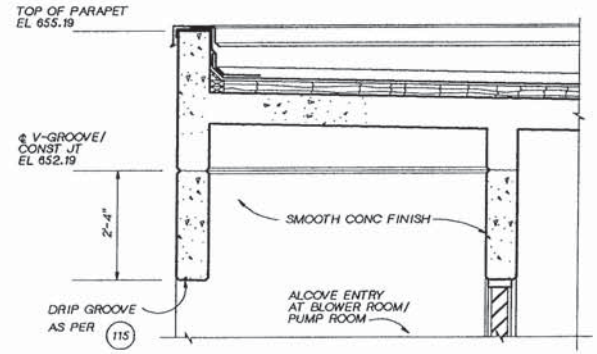

SECTION B
3/4" = 1'-0"

GENERAL NOTES

1. UNLESS OTHERWISE NOTED, PLAN DIMENSIONS ARE TO NOMINAL FACE OF MASONRY, FACE OF STUDS, AND FACE OF CONCRETE.
2. FLOOR LINE REFERS TO TOP OF CONCRETE SLABS AT THE HIGH POINT. FINISH FLOORING IS INSTALLED ABOVE THE FLOOR LINE. FOR DEPRESSED FLOORS, CURBS AND FLOOR SLOPES, SEE STRUCTURAL DRAWINGS.
3. FIGURE DIMENSIONS TAKE PRECEDENCE OVER SCALE DRAWINGS.
4. WHERE DOOR IS LOCATED NEAR CORNER OF ROOM AND IS NOT LOCATED BY DIMENSION, IT SHALL BE 6" FROM FACE OF WALL TO DOOR OPENING.
5. REFER TO STRUCTURAL, MECHANICAL, ELECTRICAL AND OTHER CATEGORIES OF DRAWINGS FOR ADDITIONAL NOTES.
6. FOR DOOR AND HARDWARE SCHEDULE, SEE SECTION 08000 OF THE SPECIFICATIONS.
7. FOR INTERIOR FINISH SCHEDULE AND COLOR LIST, SEE SECTION 09000 OF THE SPECIFICATIONS.
8. FOR ABBREVIATIONS, SEE DWG 10-G-3.
9. FOR MATERIALS LEGEND, SEE DWG 10-G-8.
10. FOR PAINT SYSTEMS (PS-), SEE SPECIFICATIONS SECTION 09900.
11. SEE DWG. 250-D-3 FOR LOUVER & VENT SCHEDULE

BUILDING CODE NOTES (1988 UBC)

1. OCCUPANCY: B-2
2. CONSTRUCTION TYPE: V-N
3. NUMBER OF STORIES: 1 + PARTIAL BASEMENT
4. FLOOR AREAS:

	ACTUAL	ALLOWABLE
BASEMENT:	775 SF	12,000 SF
GROUND FLOOR:	980 SF	12,000 SF
TOTAL:	1755 SF	12,000 SF

5. SOUTH WALL 1-HOUR RATED WITH NO OPENINGS

3948 REGISTERED ARCHITECT JOHN O. HANSEN STATE OF WASHINGTON

CH2M HILL

DSGN	J. HANSEN
DR	R.FRIBERG
CHK	C. FILANOWITZ
APVD	K HOOD

NO.	DATE	REVISION	BY	APVD

REUSE OF DOCUMENTS
THIS DOCUMENT, AND THE IDEAS AND DESIGNS INCORPORATED HEREIN, AS AN INSTRUMENT OF PROFESSIONAL SERVICE, IS THE PROPERTY OF CH2M HILL AND IS NOT TO BE USED, IN WHOLE OR IN PART, FOR ANY OTHER PROJECT WITHOUT THE WRITTEN AUTHORIZATION OF CH2M HILL.
©CH2M HILL

BAR IS ONE INCH ON ORIGINAL DRAWING. 0 1" IF NOT ONE INCH ON THIS SHEET, ADJUST SCALES ACCORDINGLY.

CITY OF WENATCHEE, WASHINGTON
WASTEWATER TREATMENT PLANT IMPROVEMENTS

HEADWORKS
ARCHITECTURAL
ROOF PLAN AND DETAILS

DWG NO. 50-A-2
DATE NOV. 1990
PROJ NO. SEA24579.N1

DATE: 11-06-90
DRAWN BY: R. FRIBERG DESIGNED BY: P. GUENTHER
DGN NAME: O:/PROJ2/WENATCHE/WE050S-A.DGN

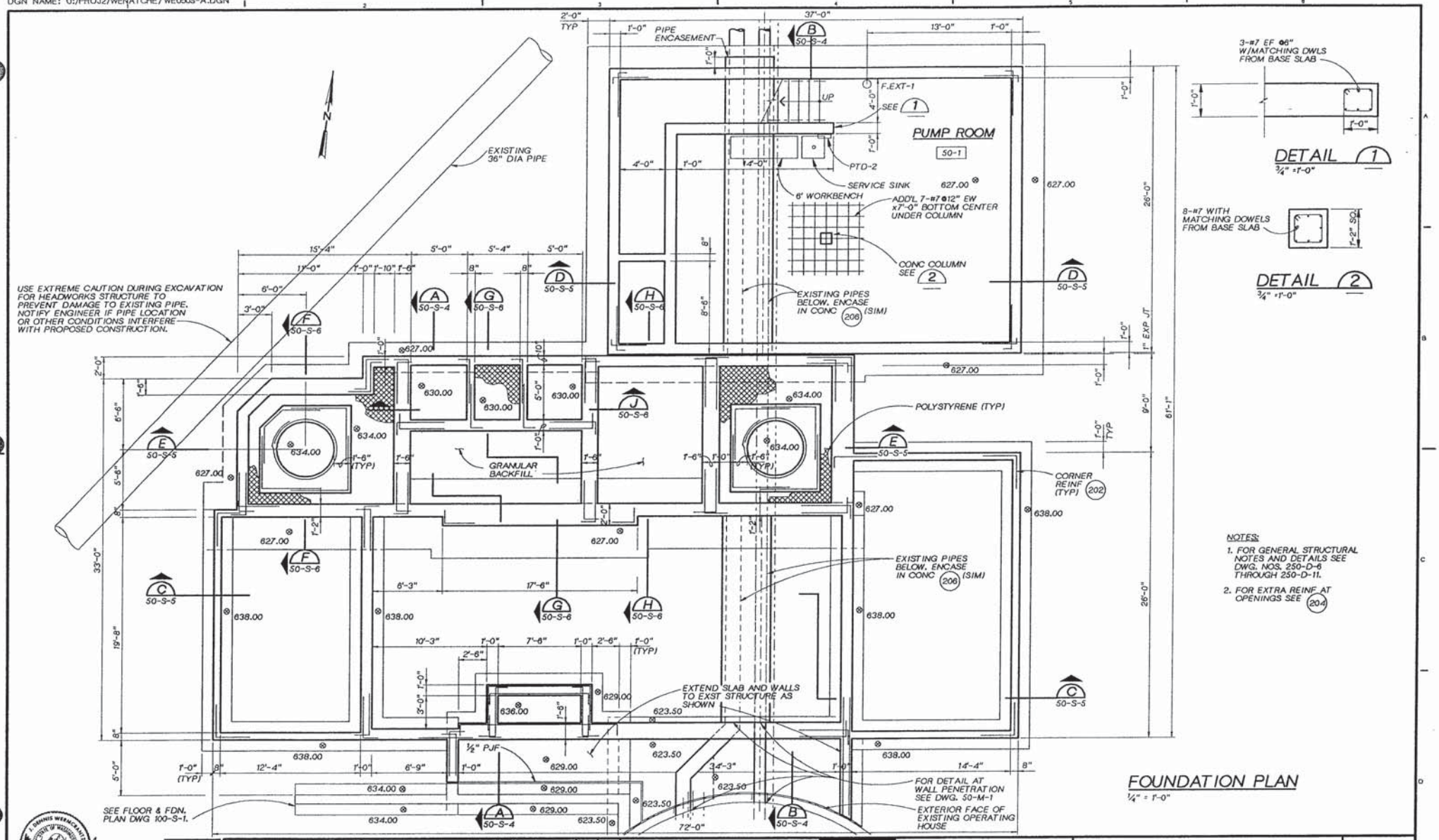

CH2M HILL	DSGN O WERMCRANTZ DR R FRIBERG CHK L ARAGON APVD K HOOD	NO. DATE REVISION BY APVD	**REUSE OF DOCUMENTS** THIS DOCUMENT, AND THE IDEAS AND DESIGNS INCORPORATED HEREIN, AS AN INSTRUMENT OF PROFESSIONAL SERVICE, IS THE PROPERTY OF CH2M HILL AND IS NOT TO BE USED, IN WHOLE OR IN PART, FOR ANY OTHER PROJECT WITHOUT THE WRITTEN AUTHORIZATION OF CH2M HILL. ©CH2M HILL	BAR IS ONE INCH ON ORIGINAL DRAWING. 0 1" IF NOT ONE INCH ON THIS SHEET, ADJUST SCALES ACCORDINGLY.	CITY OF WENATCHEE, WASHINGTON WASTEWATER TREATMENT PLANT IMPROVEMENTS

HEADWORKS
STRUCTURAL/ARCHITECTURAL
FOUNDATION & BASEMENT FLOOR PLAN

DWG NO. 50-S-1
DATE NOV. 1990
PROJ NO. SEA24579.N1

DATE: 11-06-90
DRAWN BY: R. FRIBERG DESIGNED BY: P. GUENTHER
DGN NAME: 0:/PROJ2/WENATCHE/WE050S-B.DGN

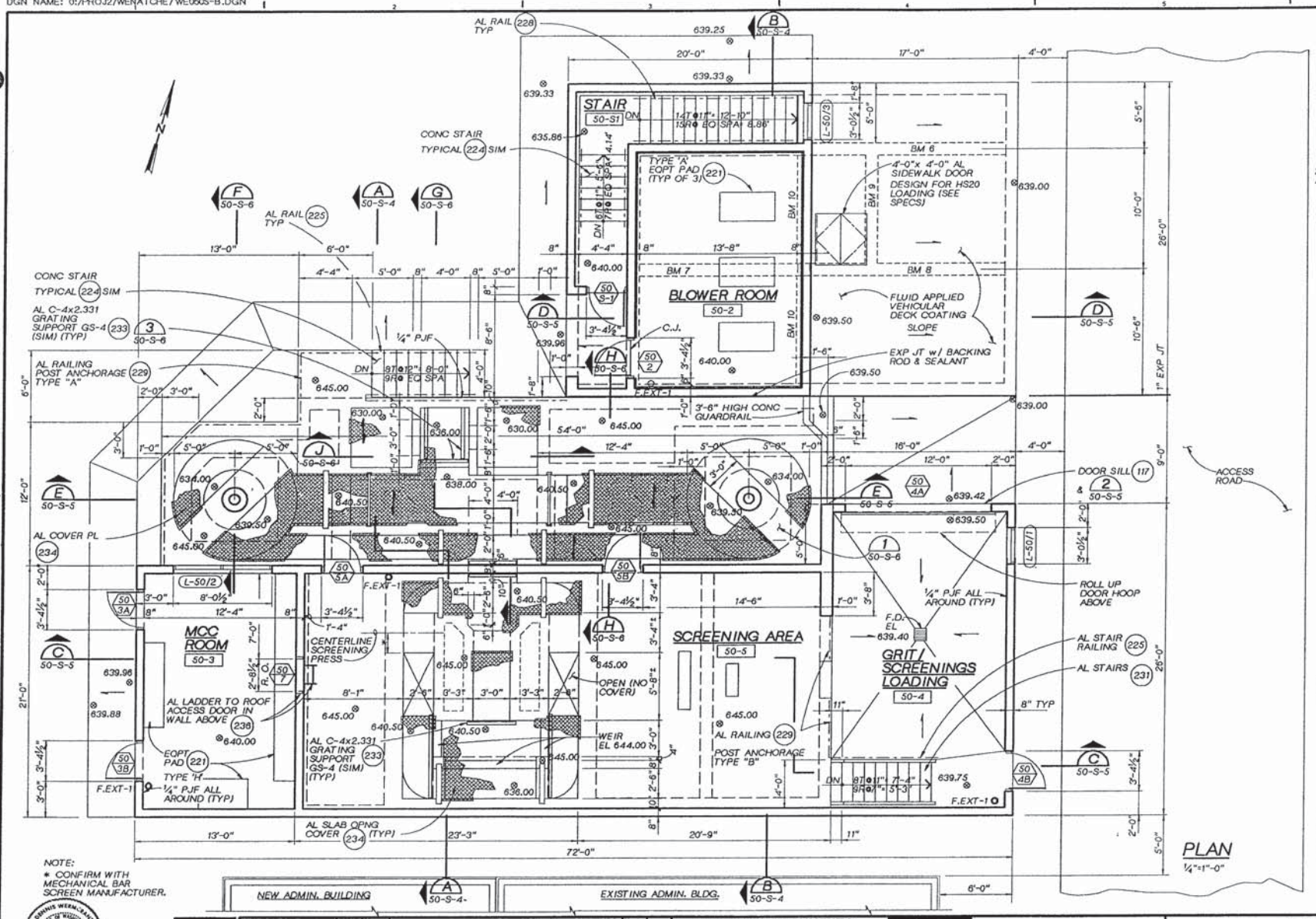

NOTE:
* CONFIRM WITH MECHANICAL BAR SCREEN MANUFACTURER.

PLAN
1/4"=1'-0"

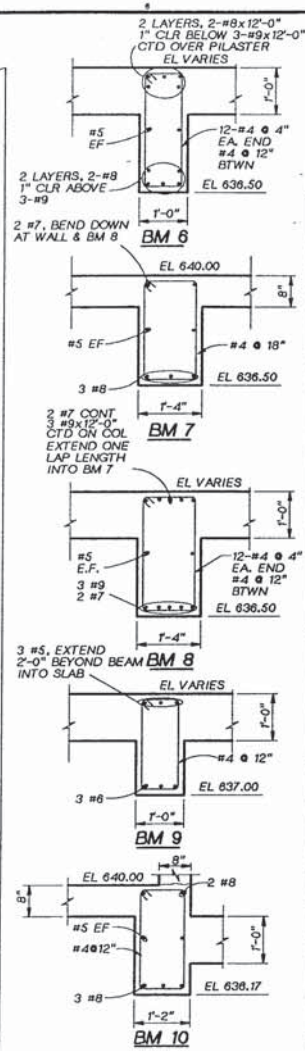

NOTES:
1. SEE CONCRETE BEAM DETAIL 222
2. AT WALLS PROVIDE POCKET 6" WIDER & 3" DEEPER THAN BEAM w/6" W.S. AT BOT & SIDES

BEAM DETAILS
3/4" = 1'-0"

CH2M HILL	DSGN D WERMCRANTZ DR R FRIBERG CHK L ARAGON APVD K HOOD	NO. DATE REVISION BY APVD	REUSE OF DOCUMENTS THIS DOCUMENT, AND THE IDEAS AND DESIGNS INCORPORATED HEREIN, AS AN INSTRUMENT OF PROFESSIONAL SERVICE, IS THE PROPERTY OF CH2M HILL AND IS NOT TO BE USED, IN WHOLE OR IN PART, FOR ANY OTHER PROJECT WITHOUT THE WRITTEN AUTHORIZATION OF CH2M HILL. ©CH2M HILL	BAR IS ONE INCH ON ORIGINAL DRAWING. 0 1" IF NOT ONE INCH ON THIS SHEET, ADJUST SCALES ACCORDINGLY.	CITY OF WENATCHEE, WASHINGTON WASTEWATER TREATMENT PLANT IMPROVEMENTS

HEADWORKS
STRUCTURAL/ARCHITECTURAL GROUND LEVEL FLOOR PLAN

DWG NO. 50-S-2
DATE NOV. 1990
PROJ. NO. SEA24579.N1

DATE: 11-06-90
DRAWN BY: R. FRIBERG DESIGNED BY: P. GUENTHER
DGN NAME: O:/PROJ2/WENATCHE/WE050S-C.DGN

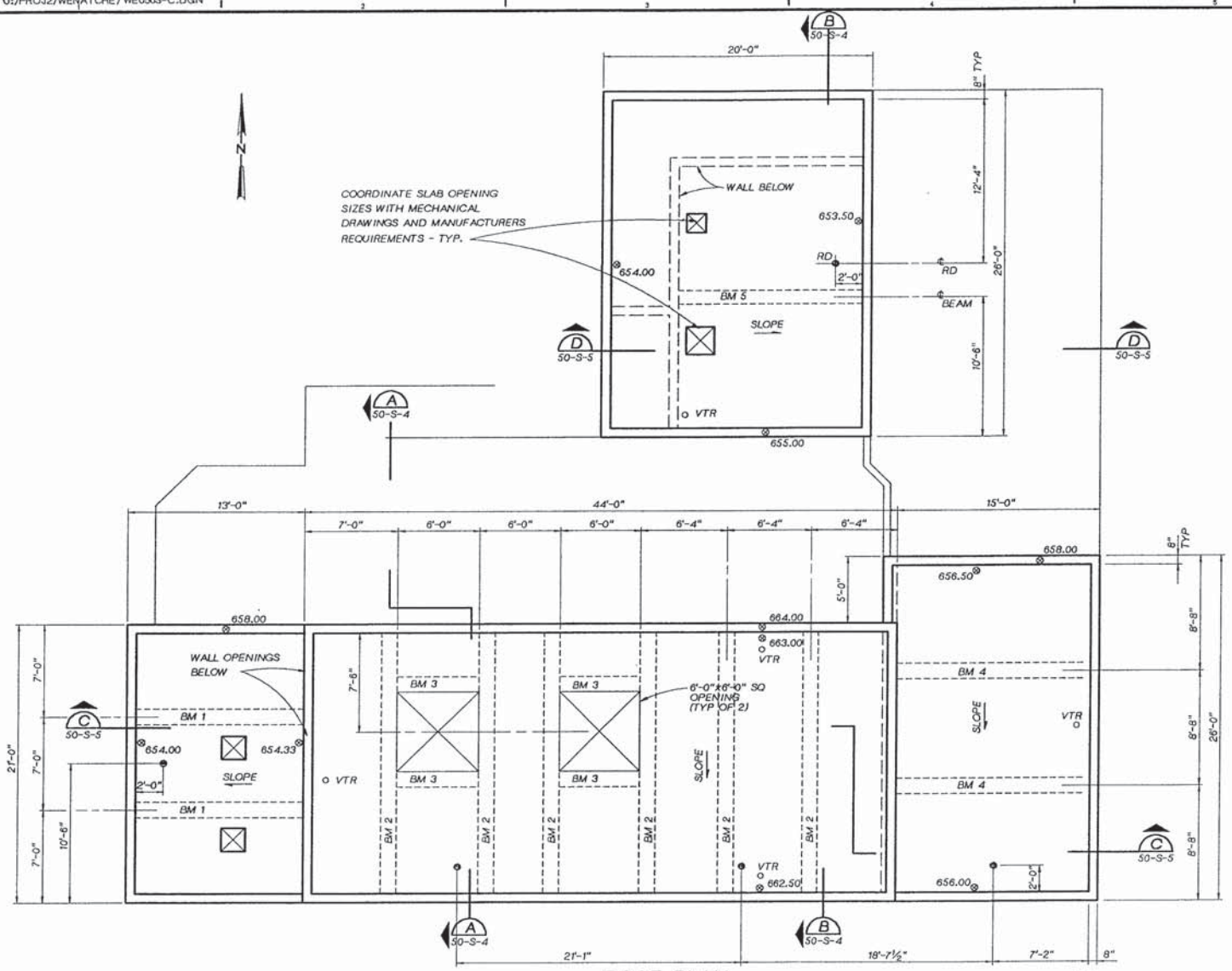

ROOF PLAN

¼" = 1'-0"

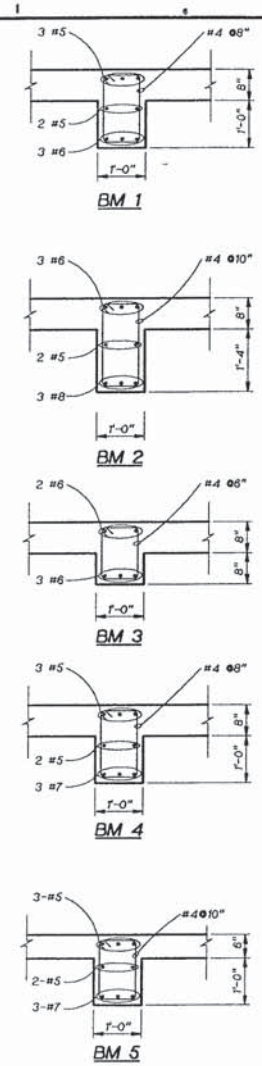

NOTE:
SEE CONCRETE BEAM DETAIL 222

BEAM DETAIL

¾"=1'-0"

DESIGN D WERMCRANTZ
DR R FRIBERG
CHK L ARAGON
APVD K HOOD

NO.	DATE	REVISION	BY	APVD

REUSE OF DOCUMENTS
THIS DOCUMENT, AND THE IDEAS AND DESIGNS INCORPORATED HEREIN, AS AN INSTRUMENT OF PROFESSIONAL SERVICE, IS THE PROPERTY OF CH2M HILL AND IS NOT TO BE USED, IN WHOLE OR IN PART, FOR ANY OTHER PROJECT WITHOUT THE WRITTEN AUTHORIZATION OF CH2M HILL.
©CH2M HILL

BAR IS ONE INCH ON ORIGINAL DRAWING.
0 1"
IF NOT ONE INCH ON THIS SHEET, ADJUST SCALES ACCORDINGLY.

CITY OF WENATCHEE, WASHINGTON
WASTEWATER TREATMENT PLANT IMPROVEMENTS

HEADWORKS
STRUCTURAL ROOF PLAN

DWG NO. 50-S-3
DATE NOV. 1990
PROJ NO. SEA24579.N1

DATE: 11-06-90
DRAWN BY: R. FRIBERG DESIGNED BY: P. GUENTHER
DGN NAME: 0:/PROJ2/WENATCHE/WE050S-D.DGN

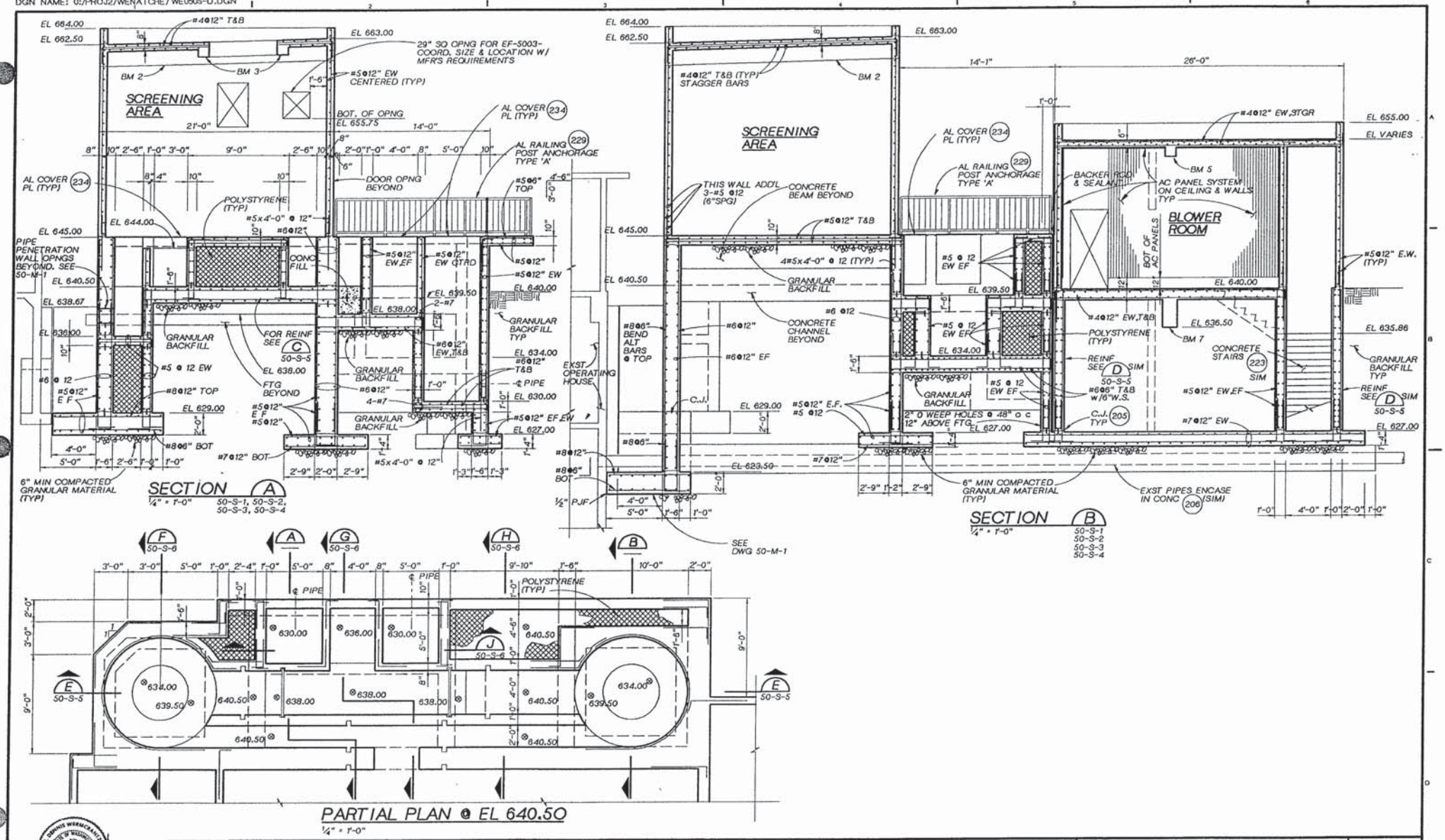

DSGN D WERMCRANTZ						
DR R FRIBERG						
CHK L ARAGON						
APVD K HOOD	NO.	DATE	REVISION	BY	APVD	

CH2M HILL

REUSE OF DOCUMENTS
THIS DOCUMENT, AND THE IDEAS AND DESIGNS INCORPORATED HEREIN, AS AN INSTRUMENT OF PROFESSIONAL SERVICE, IS THE PROPERTY OF CH2M HILL AND IS NOT TO BE USED, IN WHOLE OR IN PART, FOR ANY OTHER PROJECT WITHOUT THE WRITTEN AUTHORIZATION OF CH2M HILL.
©CH2M HILL

BAR IS ONE INCH ON ORIGINAL DRAWING.
0 1"
IF NOT ONE INCH ON THIS SHEET, ADJUST SCALES ACCORDINGLY.

CITY OF WENATCHEE, WASHINGTON
WASTEWATER TREATMENT PLANT IMPROVEMENTS

HEADWORKS
STRUCTURAL SECTIONS

DWG NO. 50-S-4
DATE NOV. 1990
PROJ NO. SEA24579.N1

DATE: 11-06-90
DRAWN BY: R. FRIBERG DESIGNED BY: P. GUENTHER
DGN NAME: O:/PROJ2/WENATCHE/WE0509-E.DGN

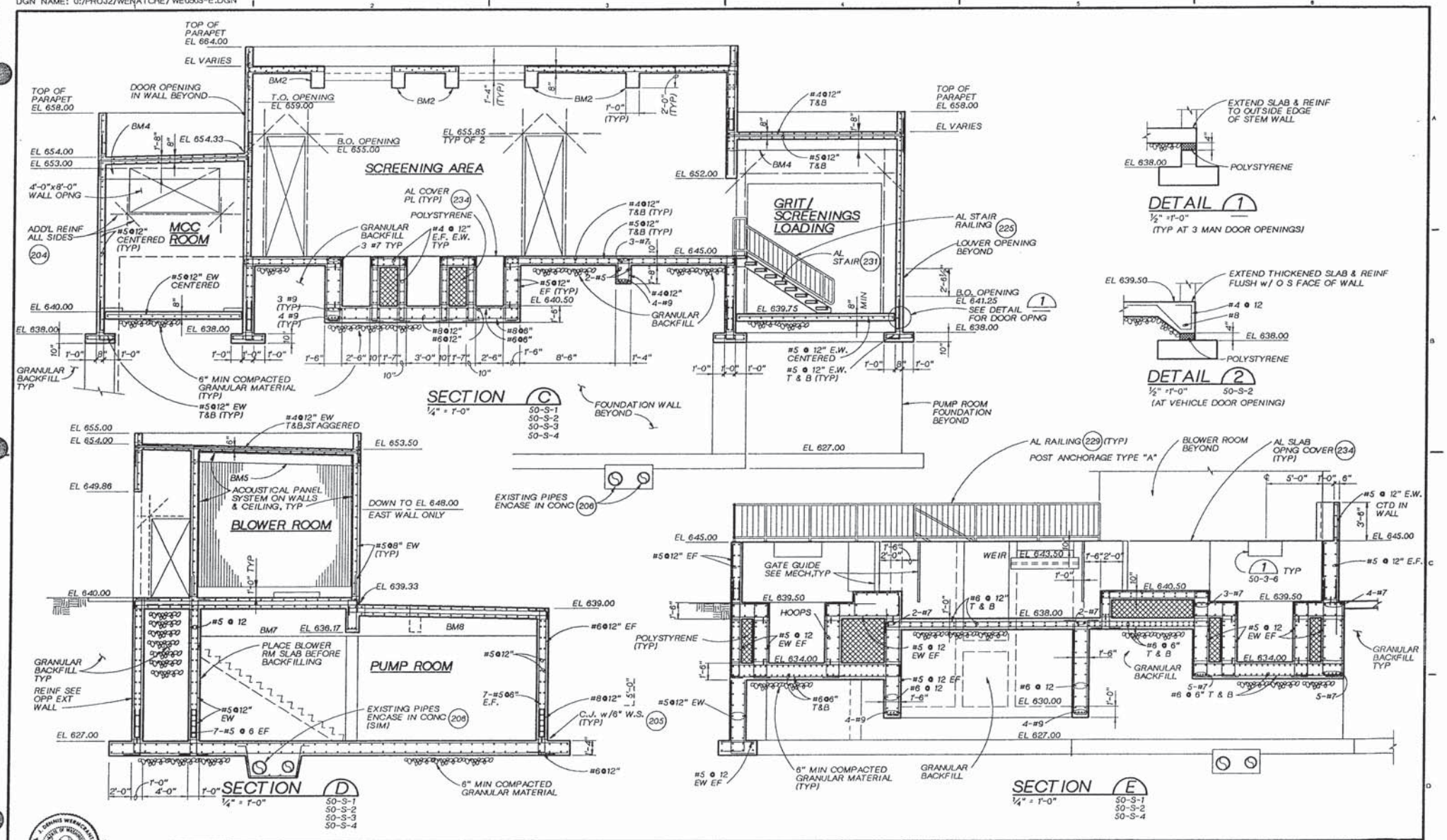

CH2M HILL	DSGN D WERMCRANTZ DR R FRIBERG CHK L ARAGON APVD K HOOD	NO. DATE REVISION BY APVD	**REUSE OF DOCUMENTS** THIS DOCUMENT, AND THE IDEAS AND DESIGNS INCORPORATED HEREIN, AS AN INSTRUMENT OF PROFESSIONAL SERVICE, IS THE PROPERTY OF CH2M HILL AND IS NOT TO BE USED, IN WHOLE OR IN PART, FOR ANY OTHER PROJECT WITHOUT THE WRITTEN AUTHORIZATION OF CH2M HILL. ©CH2M HILL	BAR IS ONE INCH ON ORIGINAL DRAWING. 0 1" IF NOT ONE INCH ON THIS SHEET, ADJUST SCALES ACCORDINGLY.	CITY OF WENATCHEE, WASHINGTON **WASTEWATER TREATMENT PLANT IMPROVEMENTS**

HEADWORKS
STRUCTURAL SECTIONS

DWG NO. 50-S-5
DATE NOV. 1990
PROJ NO. SEA24579.N1

DATE: 11-06-90
DRAWN BY: R. FRIBERG DESIGNED BY: D. WERMCRANTZ
DGN NAME: 0:/PROJ2/WENATCHE/WE050S-F.DGN

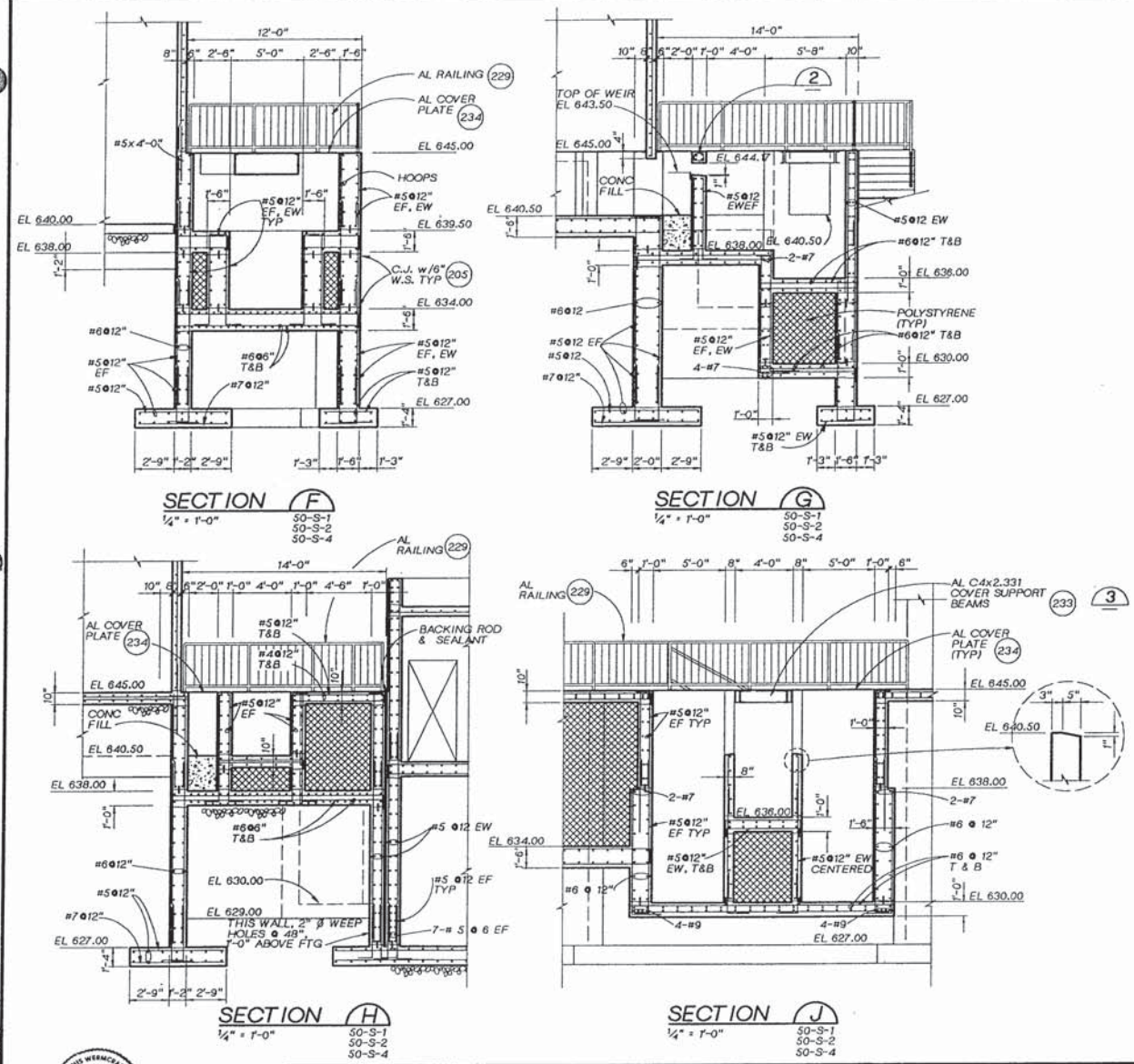

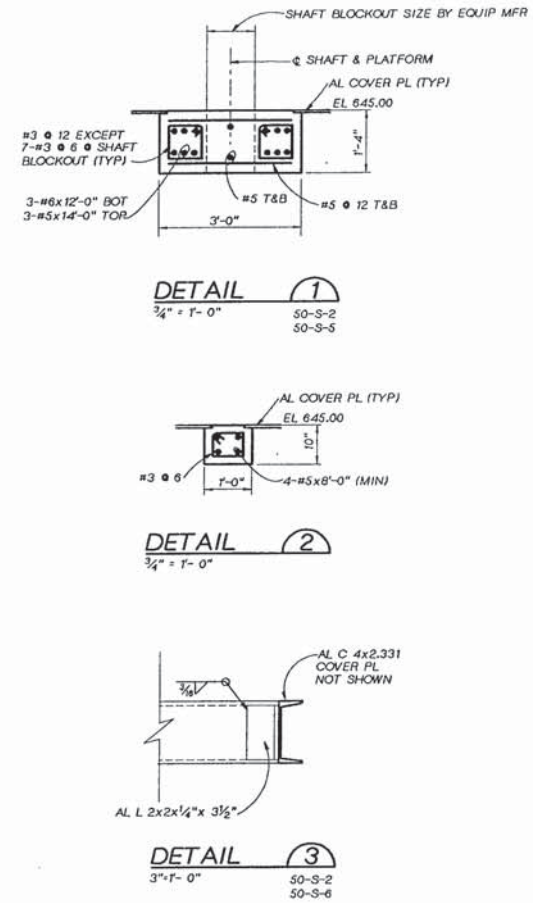

DSGN D WERMCRANTZ							
DR R FRIBERG							
CHK L ARAGON							
APVD K HOOD	NO.	DATE	REVISION	BY	APVD		

REUSE OF DOCUMENTS
THIS DOCUMENT, AND THE IDEAS AND DESIGNS INCORPORATED HEREIN, AS AN INSTRUMENT OF PROFESSIONAL SERVICE, IS THE PROPERTY OF CH2M HILL AND IS NOT TO BE USED, IN WHOLE OR IN PART, FOR ANY OTHER PROJECT WITHOUT THE WRITTEN AUTHORIZATION OF CH2M HILL.
©CH2M HILL

BAR IS ONE INCH ON ORIGINAL DRAWING.
0 1"
IF NOT ONE INCH ON THIS SHEET, ADJUST SCALES ACCORDINGLY.

CITY OF WENATCHEE, WASHINGTON
WASTEWATER TREATMENT PLANT IMPROVEMENTS

HEADWORKS
STRUCTURAL SECTIONS

DWG NO. 50-S-6
DATE NOV. 1990
PROJ NO. SEA24579.N1

DATE: 11/06/90 DIC
DRAWN BY: J. BROWN DESIGNED BY: T. CASHER
DGN NAME: 0:/PROJ2/WENATCHE/ WE050M-A.DGN

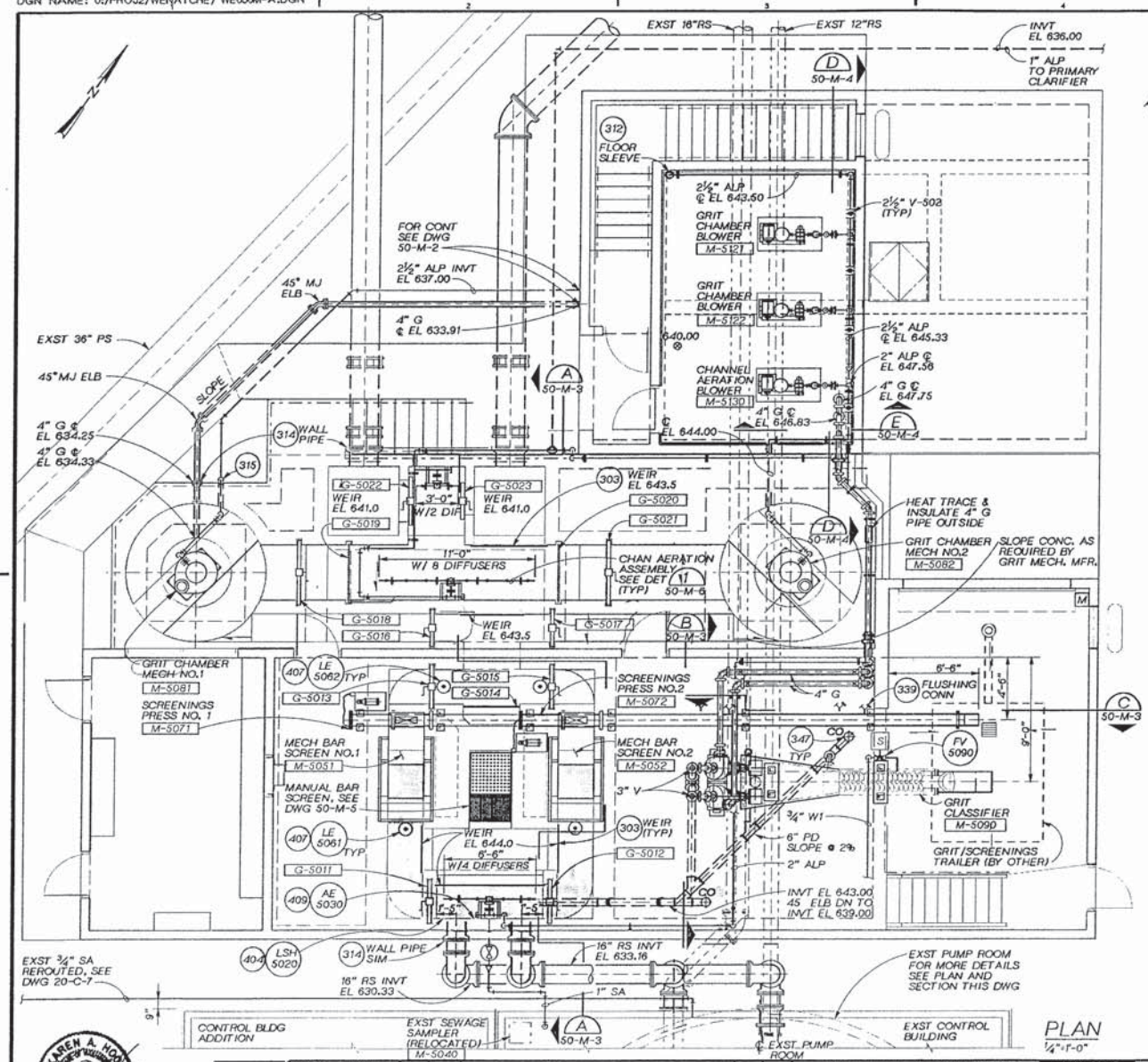

PLAN
1/4"=1'-0"

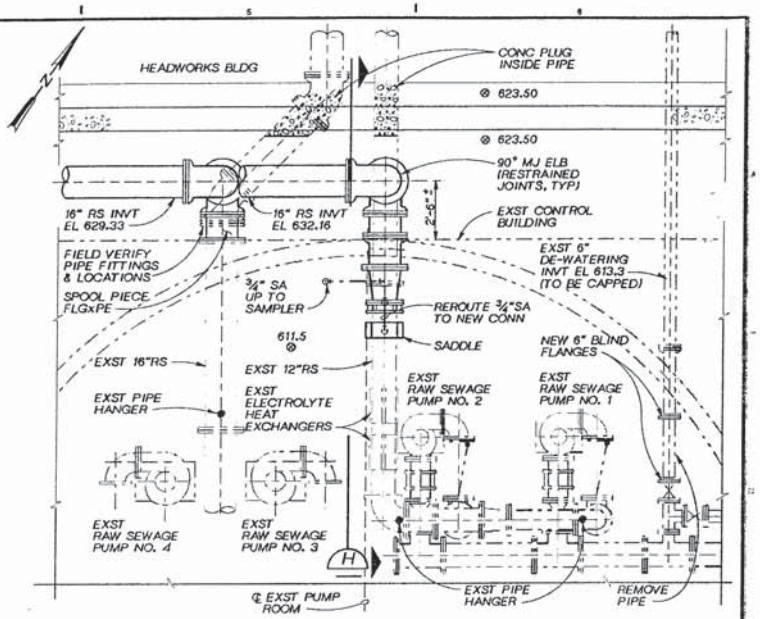

PARTIAL PUMP RM PLAN
3/8"=1'-0"

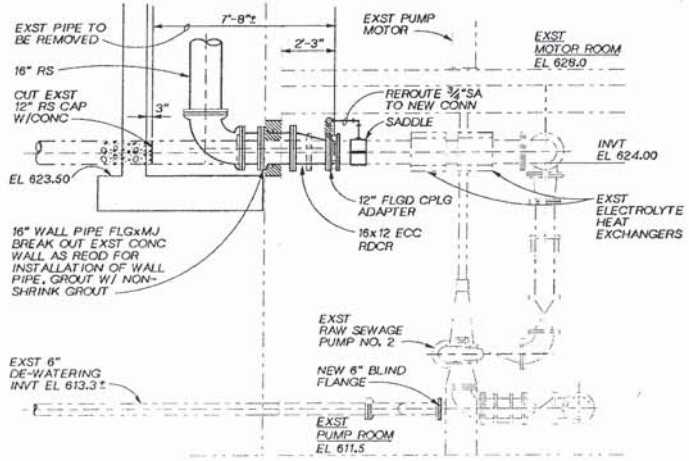

SECTION H
3/8"=1'-0"

KAREN A. HOOD PROFESSIONAL ENGINEER

CH2M HILL

DSGN	T. CASHER			
DR	J. BROWN			
CHK	R. STAEHLIN			
APVD	K HOOD	NO.	DATE	REVISION	BY	APVD

REUSE OF DOCUMENTS
THIS DOCUMENT, AND THE IDEAS AND DESIGNS INCORPORATED HEREIN, AS AN INSTRUMENT OF PROFESSIONAL SERVICE, IS THE PROPERTY OF CH2M HILL AND IS NOT TO BE USED, IN WHOLE OR IN PART, FOR ANY OTHER PROJECT WITHOUT THE WRITTEN AUTHORIZATION OF CH2M HILL.
©CH2M HILL

SCALE BAR IS ONE INCH ON ORIGINAL DRAWING. 0 1"
IF NOT ONE INCH ON THIS SHEET, ADJUST SCALES ACCORDINGLY.

CITY OF WENATCHEE, WASHINGTON
WASTEWATER TREATMENT PLANT IMPROVEMENTS

HEADWORKS
MECHANICAL GROUND LEVEL PLAN

DWG NO. 50-M-1
DATE NOV. 1990
PROJ NO. SEA24579.N1

DATE: 11/06/90 BIC
DRAWN BY: J. BROWN DESIGNED BY: T. CASHER
DGN NAME: O:/PROJ2/WENATCHE/ WE050M-B.DGN

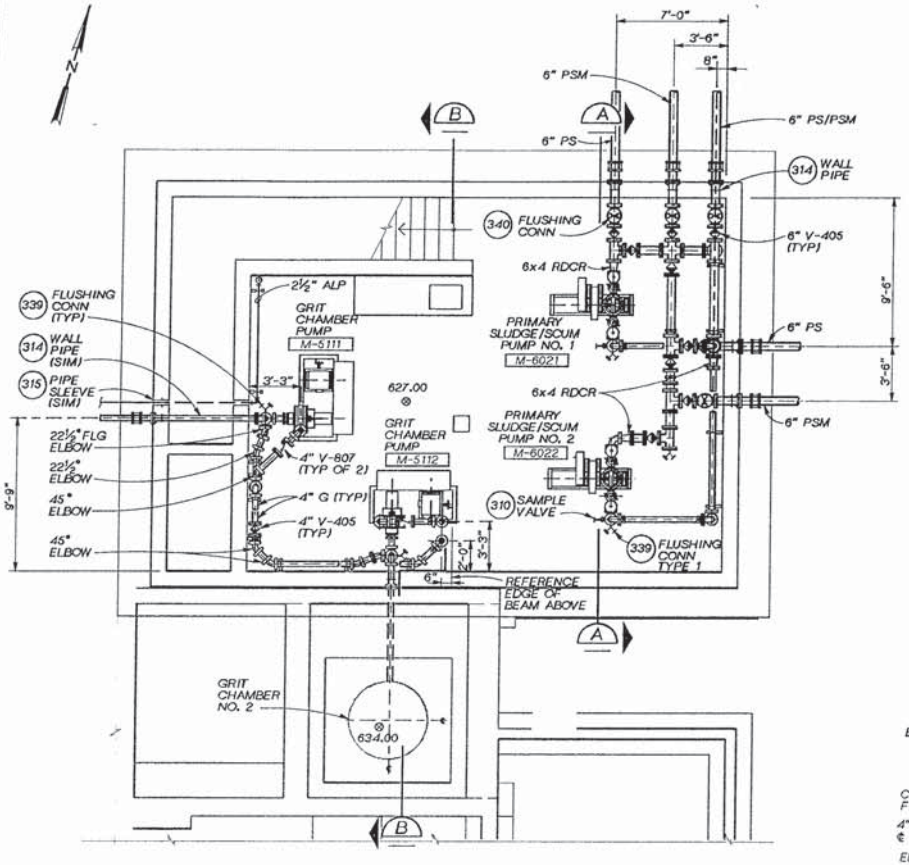

LOWER LEVEL PLAN

¼"=1'-0"

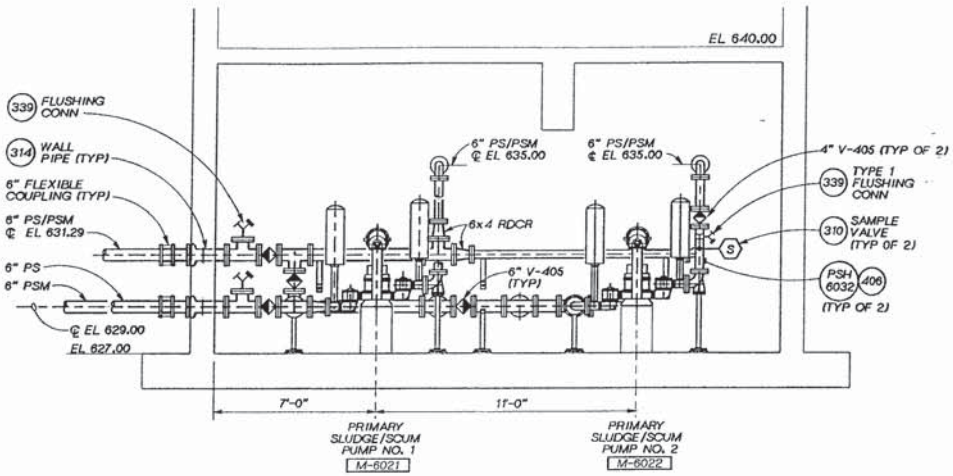

SECTION (A)

⅜"=1'-0"

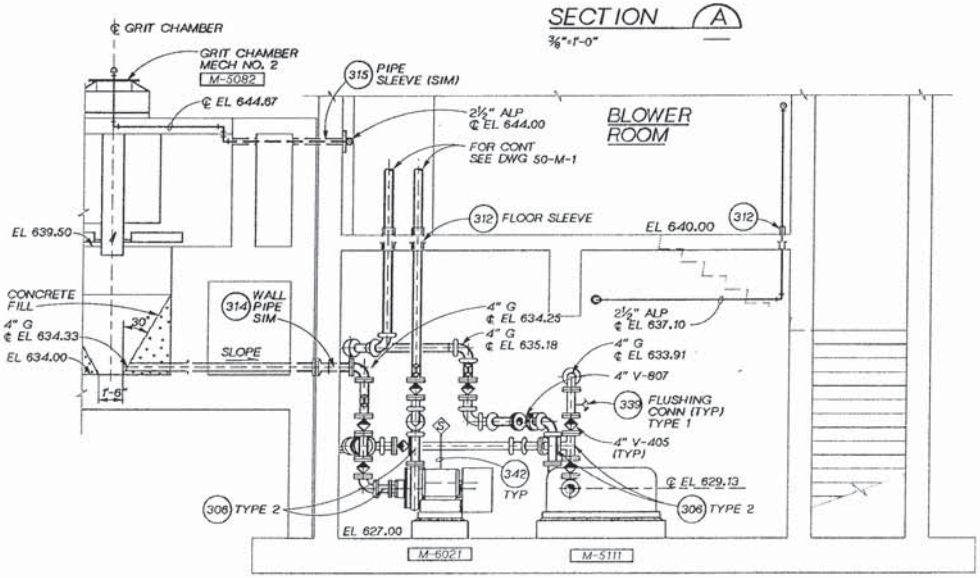

SECTION (B)

⅜"=1'-0"

KAREN A. HOOD PROFESSIONAL ENGINEER

CH2M HILL

DSGN	T. CASHER				
DR	J. BROWN				
CHK	R. STAEHLIN				
APVD	K. HOOD	NO.	DATE	REVISION	BY / APVD

REUSE OF DOCUMENTS
THIS DOCUMENT, AND THE IDEAS AND DESIGNS INCORPORATED HEREIN, AS AN INSTRUMENT OF PROFESSIONAL SERVICE, IS THE PROPERTY OF CH2M HILL AND IS NOT TO BE USED, IN WHOLE OR IN PART, FOR ANY OTHER PROJECT WITHOUT THE WRITTEN AUTHORIZATION OF CH2M HILL.
©CH2M HILL

VERIFY SCALE
BAR IS ONE INCH ON ORIGINAL DRAWING.
0 1"
IF NOT ONE INCH ON THIS SHEET, ADJUST SCALES ACCORDINGLY.

CITY OF WENATCHEE, WASHINGTON
WASTEWATER TREATMENT PLANT IMPROVEMENTS

HEADWORKS
MECHANICAL LOWER LEVEL PLAN AND SECTION

DWG NO. 50-M-2
DATE NOV. 1990
PROJ. NO. SEA24579.N1

DATE: 11/06/90 BIC
DRAWN BY: J. BROWN DESIGNED BY: T. CASHER
DGN NAME: O:/PROJ2/WENATCHE/WE050M-C.DGN

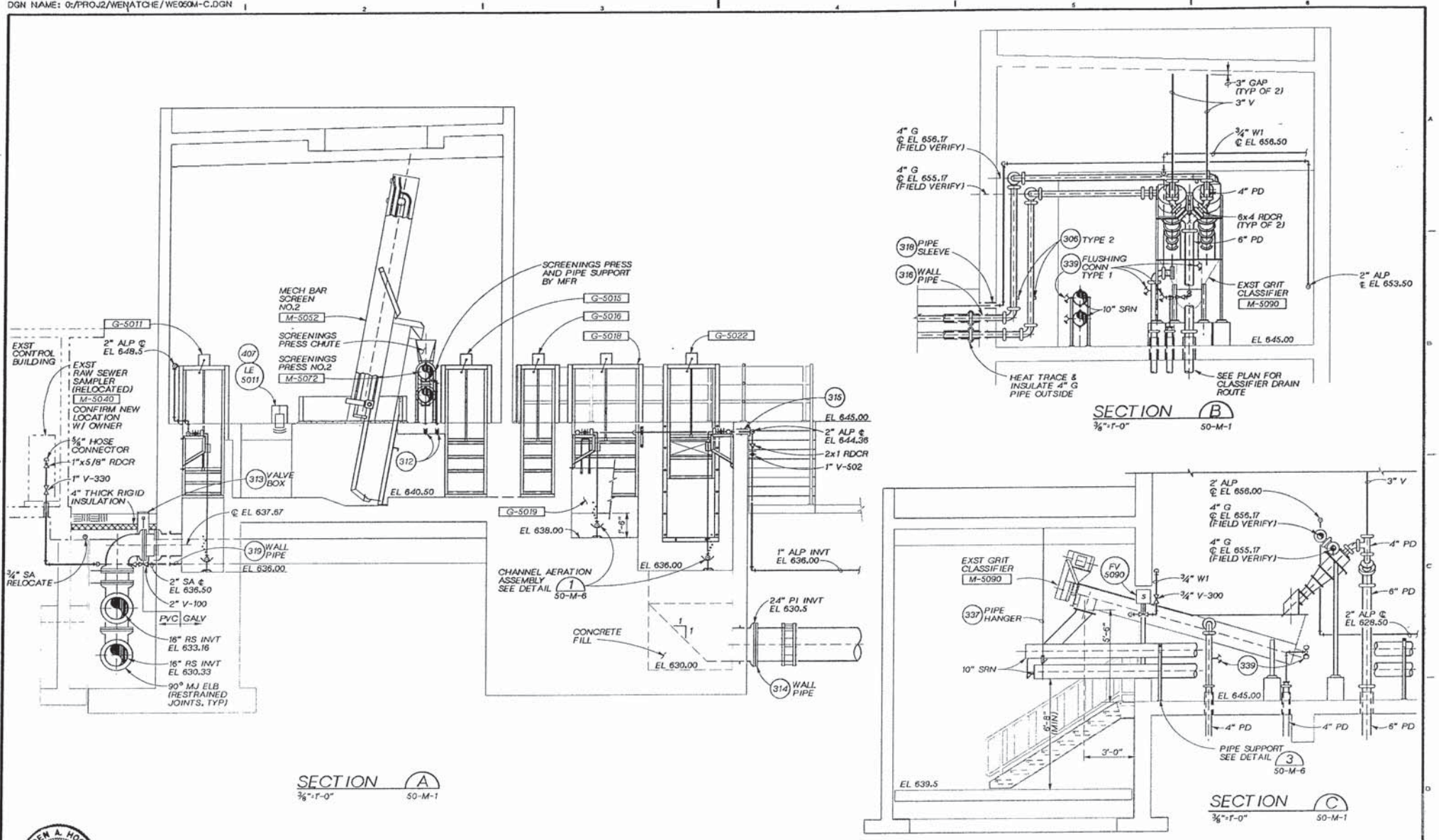

KAREN A. HOOD PROFESSIONAL ENGINEER

CH2M HILL

DSGN	T. CASHER				
DR	J. BROWN				
CHK	R. STAEHLIN				
APVD	K. HOOD	NO.	DATE	REVISION	BY	APVD

REUSE OF DOCUMENTS
THIS DOCUMENT, AND THE IDEAS AND DESIGNS INCORPORATED HEREIN, AS AN INSTRUMENT OF PROFESSIONAL SERVICE, IS THE PROPERTY OF CH2M HILL AND IS NOT TO BE USED, IN WHOLE OR IN PART, FOR ANY OTHER PROJECT WITHOUT THE WRITTEN AUTHORIZATION OF CH2M HILL.
©CH2M HILL

VERIFY SCALE
BAR IS ONE INCH ON ORIGINAL DRAWING.
0 1"
IF NOT ONE INCH ON THIS SHEET, ADJUST SCALES ACCORDINGLY.

CITY OF WENATCHEE, WASHINGTON
WASTEWATER TREATMENT PLANT IMPROVEMENTS

HEADWORKS
MECHANICAL SECTIONS

DWG NO. 50-M-3
DATE NOV. 1990
PROJ. NO. SEA24579.N1

DATE: 10-25-90 CJB
DRAWN BY: J. BROWN DESIGNED BY: T. CASHER
DGN NAME: O:/PROJ2/WENATCHE/WE050M-D.DGN

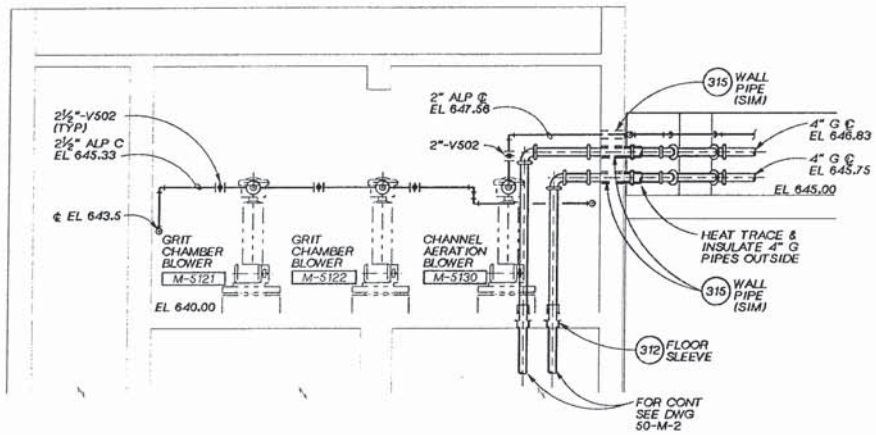

SECTION D
3/8"= 1'-0" 50-M-1

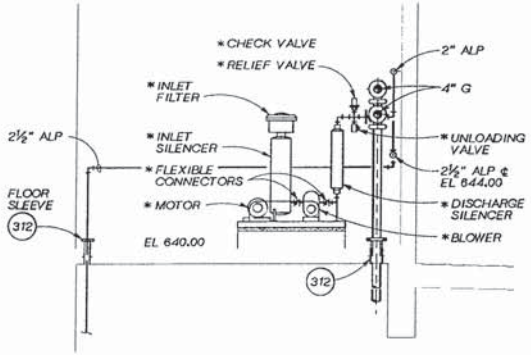

NOTE:

1. * DENOTES EQUIPMENT FURNISHED BY BLOWER MANUFACTURER.

SECTION E
3/8"= 1'-0" 50-M-1

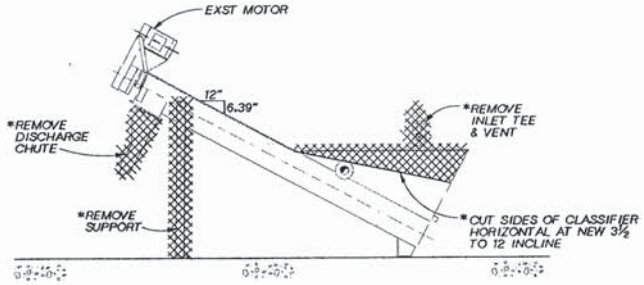

ELEVATION

EXISTING GRIT CLASSIFIER

NOTES:

1. * MODIFICATION TO CLASSIFIER BY OWNER.
2. INSTALLATION OF CLASSIFIER AND ALL CONNECTIONS BY CONTRACTOR.
3. SUPPLY AND INSTALLATION OF CYCLONES BY CONTRACTOR, SEE SPECIFICATION.

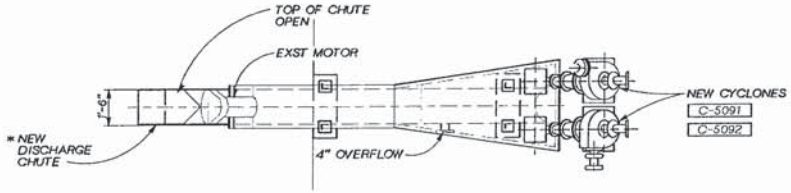

PLAN

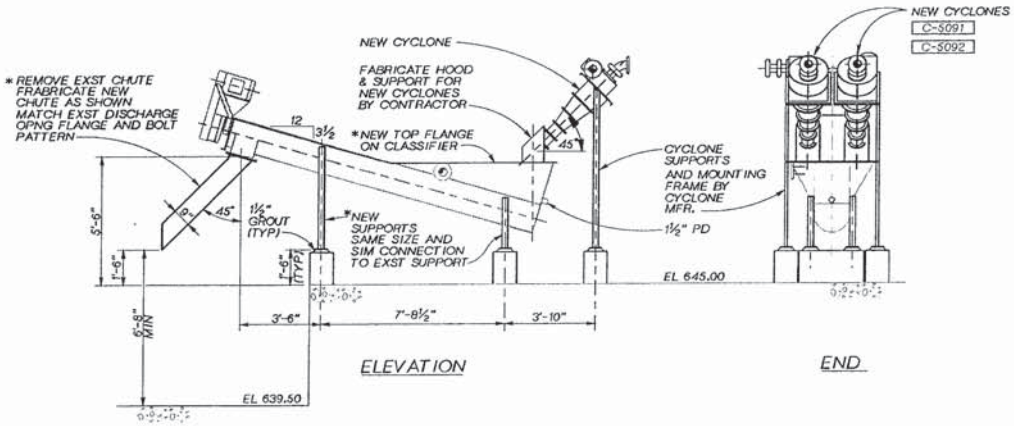

ELEVATION END

EXIST GRIT CLASSIFIER MODIFICATIONS
3/8"= 1'-0"

KAREN A. HOOD REGISTERED PROFESSIONAL ENGINEER

CH2M HILL

DSGN	T. CASHER				
DR	J. BROWN				
CHK	R. STAEHLIN				
APVD	K. HOOD	NO.	DATE	REVISION	BY	APVD

REUSE OF DOCUMENTS
THIS DOCUMENT, AND THE IDEAS AND DESIGNS INCORPORATED HEREIN, AS AN INSTRUMENT OF PROFESSIONAL SERVICE, IS THE PROPERTY OF CH2M HILL AND IS NOT TO BE USED, IN WHOLE OR IN PART, FOR ANY OTHER PROJECT WITHOUT THE WRITTEN AUTHORIZATION OF CH2M HILL.
©CH2M HILL

VERIFY SCALE
BAR IS ONE INCH ON ORIGINAL DRAWING.
0 1"
IF NOT ONE INCH ON THIS SHEET, ADJUST SCALES ACCORDINGLY.

CITY OF WENATCHEE, WASHINGTON
WASTEWATER TREATMENT PLANT IMPROVEMENTS

HEADWORKS
MECHANICAL SECTIONS

DWG NO. 50-M-4
DATE NOV. 1990
PROJ. NO. SEA24579.N1

DATE: 10-26-90 CJB
DRAWN BY: J. BROWN DESIGNED BY: E. RONSHAUEN
DGN NAME: 0:/PROJ2/WENATCHE/WE050M-E.DGN

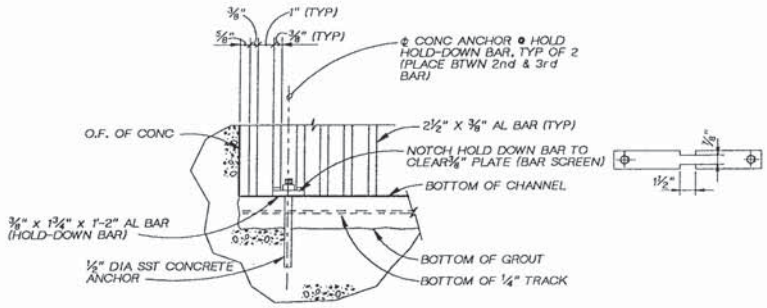

ELEVATION SECTION (A)

3"=1'-0"

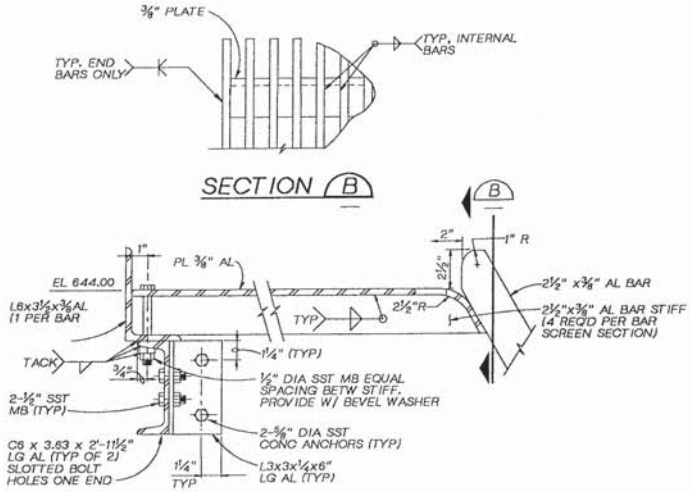

SECTION (B)

BAR SCREEN SUPPORT DETAIL (3)

3"=1'-0"

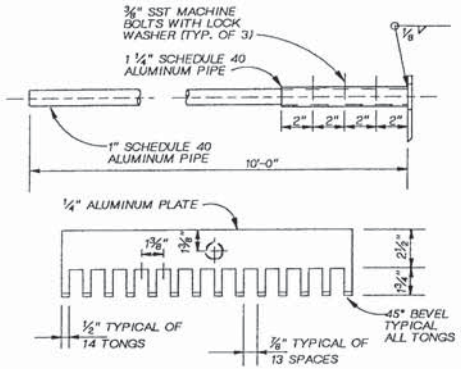

NOTES:
1. ONE RAKE REQUIRED.
2. GRIND ALL EDGES SMOOTH EXCEPT WHERE SHOWN.

SCREEN RAKE DETAIL (4)

3"=1'-0"

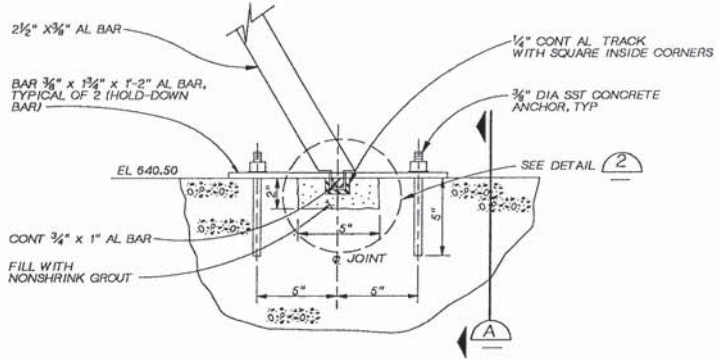

BAR SCREEN SUPPORT DETAIL (1)

3"=1'-0"

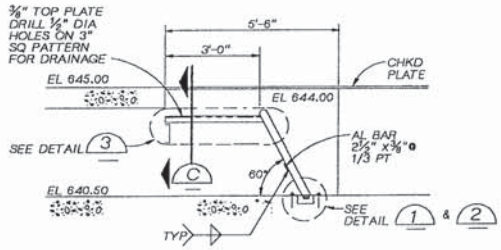

NOTES:
1. FOR SCREEN RAKE, SEE (4)

MANUAL BAR SCREEN SECTION, TYP

½"=1'-0"

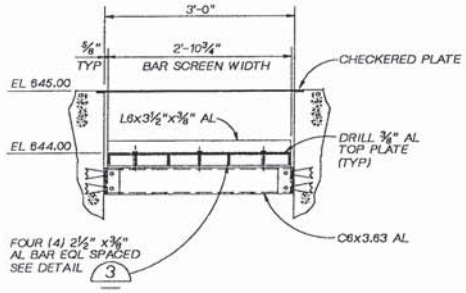

SECTION (C)

1"=1'-0"

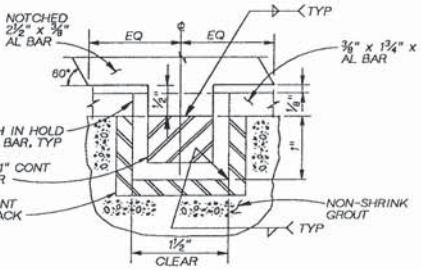

DETAIL (2)

FULL SCALE

KAREN A. HOOD — STATE OF WASHINGTON — REGISTERED PROFESSIONAL ENGINEER

CH2M HILL

DSGN	T. CASHER				
DR	J. BROWN				
CHK	R. STAEHLIN				
APVD	K HOOD	NO.	DATE	REVISION	BY / APVD

REUSE OF DOCUMENTS
THIS DOCUMENT, AND THE IDEAS AND DESIGNS INCORPORATED HEREIN, AS AN INSTRUMENT OF PROFESSIONAL SERVICE, IS THE PROPERTY OF CH2M HILL AND IS NOT TO BE USED, IN WHOLE OR IN PART, FOR ANY OTHER PROJECT WITHOUT THE WRITTEN AUTHORIZATION OF CH2M HILL.
©CH2M HILL

BAR IS ONE INCH ON ORIGINAL DRAWING. 0 1" IF NOT ONE INCH ON THIS SHEET, ADJUST SCALES ACCORDINGLY.

CITY OF WENATCHEE, WASHINGTON
WASTEWATER TREATMENT PLANT IMPROVEMENTS

HEADWORKS
MANUAL BAR SCREEN SECTIONS & DETAILS

DWG NO. 50-M-6
DATE NOV. 1990
PROJ NO. SEA24579.N1

DATE: 11/06/90 BIC
DRAWN BY: J. BROWN DESIGNED BY: T. CASHER
DGN NAME: 0:/PROJ2/WENATCHE/WE050M-F.DGN

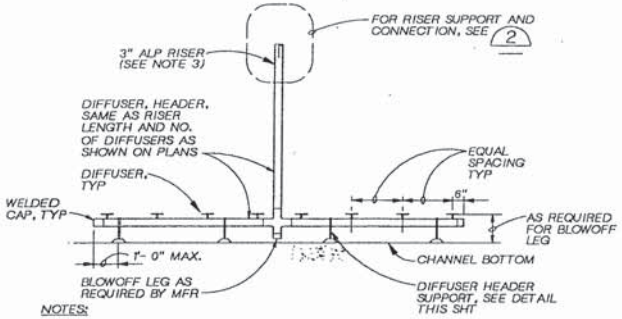

NOTES:

1. ALL MATERIAL FOR THE ASSEMBLY SHALL BE AL.
2. PROVIDE FOUR DIFFUSER HEADER SUPPORTS ON HEADERS 6 FT IN LENGTH AND GREATER. PROVIDE 2 SUPPORTS ON HEADERS LESS THAN 6 FT. DIFFUSER SUPPORTS SHALL BE EQUALLY SPACED ALONG HEADER.
3. MAKE RISER AND HEADER 3" AL SCHED 40 PIPE FOR HEADERS 6 FT IN LENGTH AND GREATER. MAKE RISER AND HEADER 2" AL AND SCHED 40 PIPE FOR HEADER LESS THAN 6 FT.

DIFFUSER HEADER DETAIL

½"=1'-0"

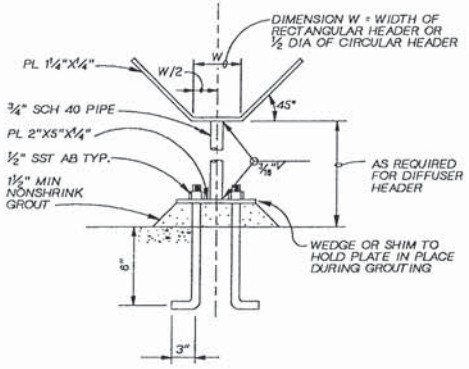

HEADER SUPPORT DETAIL

NTS

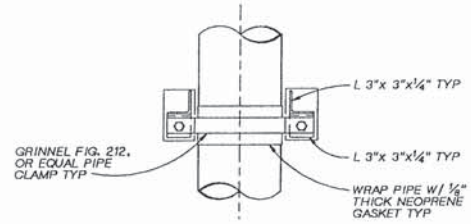

PLAN

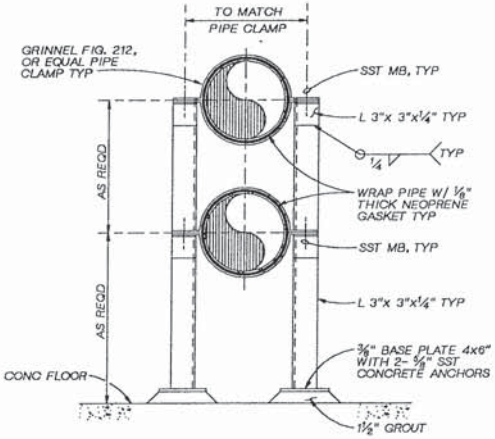

ELEVATION

NOTE:
HOT DIP GALVANIZE AFTER FABRICATION.

PIPE SUPPORT DETAIL 3

NTS 50-M-3

CHANNEL AERATION ASSEMBLY DETAIL 1

SCALE AS NOTED

50-M-1
50-M-3
60-M-1

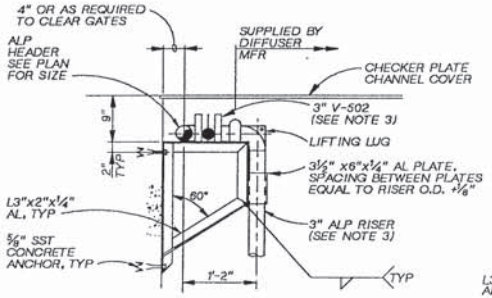

SIDE ELEVATION

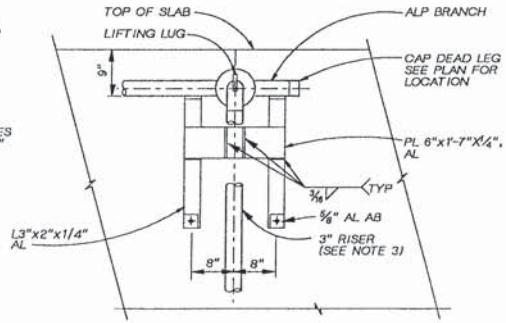

FRONT ELEVATION

RISER SUPPORT AND CONNECTION DETAIL 2

1"=1'-0"

REUSE OF DOCUMENTS
THIS DOCUMENT, AND THE IDEAS AND DESIGNS INCORPORATED HEREIN, AS AN INSTRUMENT OF PROFESSIONAL SERVICE, IS THE PROPERTY OF CH2M HILL AND IS NOT TO BE USED, IN WHOLE OR IN PART, FOR ANY OTHER PROJECT WITHOUT THE WRITTEN AUTHORIZATION OF CH2M HILL.
©CH2M HILL

BAR IS ONE INCH ON ORIGINAL DRAWING. 0 1"
IF NOT ONE INCH ON THIS SHEET, ADJUST SCALES ACCORDINGLY.

DSGN T. CASHER
DR J. BROWN
CHK R. STAEHLIN
APVD K HOOD

NO.	DATE	REVISION	BY	APVD

CITY OF WENATCHEE, WASHINGTON
WASTEWATER TREATMENT PLANT IMPROVEMENTS

HEADWORKS
MECHANICAL DETAILS

DWG NO. 50-M-6
DATE NOV. 1990
PROJ NO. SEA24579.N1

DRAWN BY: S.D.GUNDY DESIGNED BY: S.D.GUNDY
DGN NAME: O:/PROJ2/WENATCHE/WE050H-A.DGN

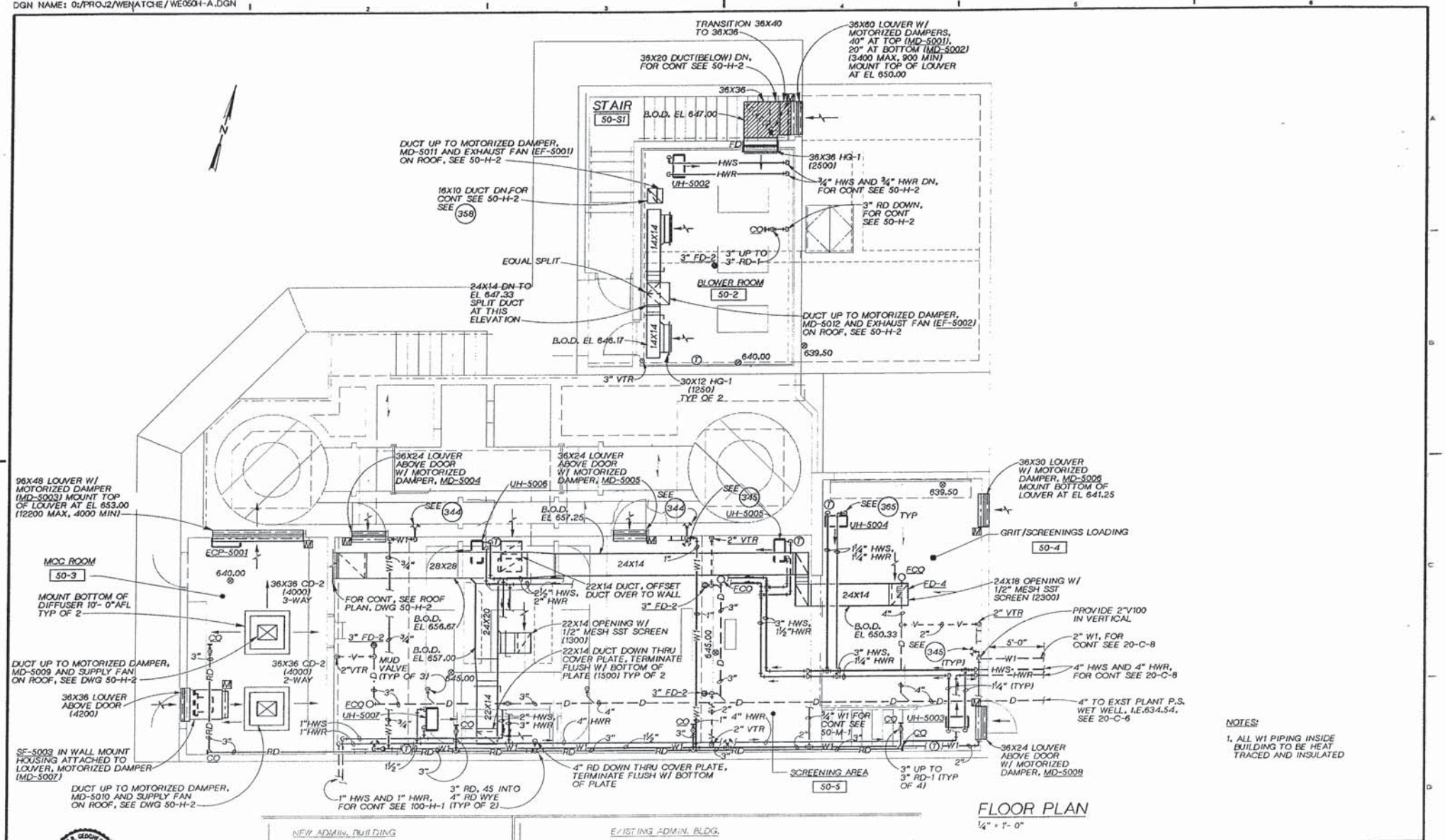

FLOOR PLAN
¼" = 1'- 0"

NOTES:

1. ALL W1 PIPING INSIDE BUILDING TO BE HEAT TRACED AND INSULATED

DSGN	S.D.GUNDY				
DR	S.D.GUNDY				
CHK	SIEMENS/REGER				
APVD	K HOOD	NO.	DATE	REVISION	BY	APVD

CH2M HILL

REUSE OF DOCUMENTS
THIS DOCUMENT, AND THE IDEAS AND DESIGNS INCORPORATED HEREIN, AS AN INSTRUMENT OF PROFESSIONAL SERVICE, IS THE PROPERTY OF CH2M HILL AND IS NOT TO BE USED, IN WHOLE OR IN PART, FOR ANY OTHER PROJECT WITHOUT THE WRITTEN AUTHORIZATION OF CH2M HILL.
©CH2M HILL

SCALE 1=1.0
BAR IS ONE INCH ON ORIGINAL DRAWING.
0 1"
IF NOT ONE INCH ON THIS SHEET, ADJUST SCALES ACCORDINGLY.

CITY OF WENATCHEE, WASHINGTON
WASTEWATER TREATMENT PLANT IMPROVEMENTS

HEADWORKS
HVAC AND PLUMBING FLOOR PLAN

DWG NO. 50-H-1
DATE NOV. 1990
PROJ. NO. SEA24579.N1

DATE: 11/6/90
DRAWN BY: S.D.GUNDY DESIGNED BY: S.D.GUNDY
DGN NAME: O:/PROJ2/WENATCHE/WE050H-B.DGN

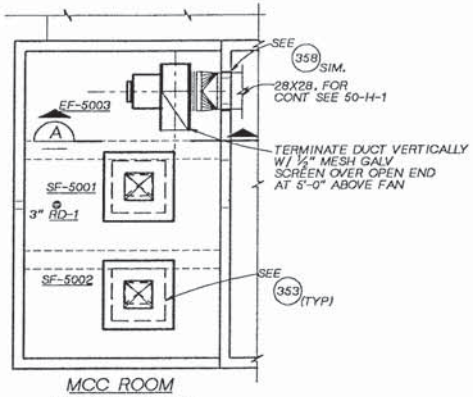

MCC ROOM
ROOF PLAN
¼" =1'- 0"

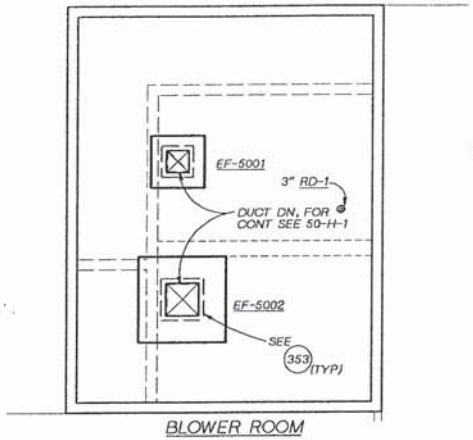

BLOWER ROOM
ROOF PLAN
¼" =1'- 0"

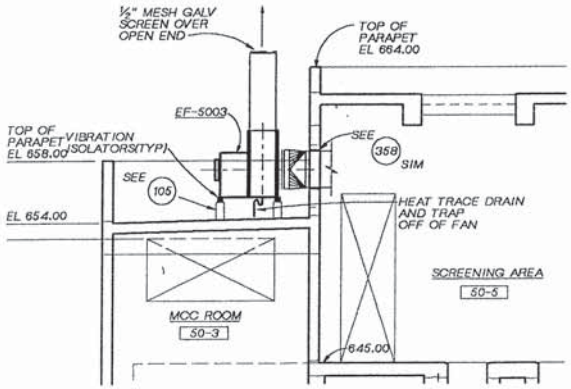

SECTION A
¼" =1'-0"

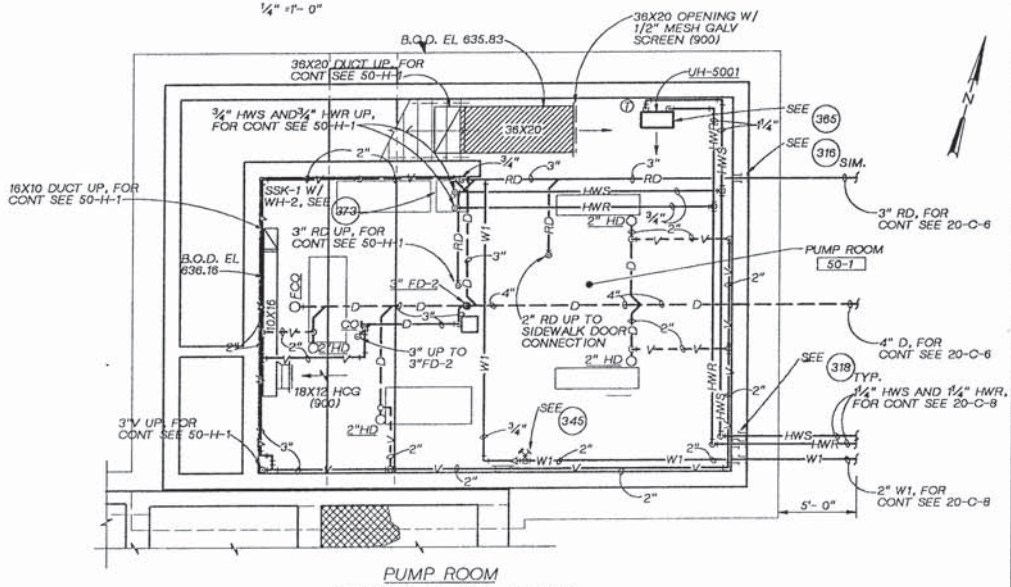

PUMP ROOM
LOWER LEVEL PLAN
¼" =1'- 0"

DSGN S.D.GUNDY						
DR S.D.GUNDY						
CHK SEIMENS/REGER						
APVD K HOOD	NO.	DATE	REVISION	BY	APVD	

CH2M HILL

REUSE OF DOCUMENTS
THIS DOCUMENT, AND THE IDEAS AND DESIGNS INCORPORATED HEREIN, AS AN INSTRUMENT OF PROFESSIONAL SERVICE, IS THE PROPERTY OF CH2M HILL AND IS NOT TO BE USED, IN WHOLE OR IN PART, FOR ANY OTHER PROJECT WITHOUT THE WRITTEN AUTHORIZATION OF CH2M HILL.
©CH2M HILL

BAR IS ONE INCH ON ORIGINAL DRAWING. 0 1"
IF NOT ONE INCH ON THIS SHEET, ADJUST SCALES ACCORDINGLY.

CITY OF WENATCHEE, WASHINGTON
WASTEWATER TREATMENT PLANT IMPROVEMENTS

HEADWORKS
HVAC AND PLUMBING
ROOF PLANS AND LOWER LEVEL PLAN

DWG NO. 50-H-2
DATE NOV. 1990
PROJ. NO. SEA24579.N1

DATE: 11/06/90 BIC
DRAWN BY: M. SPARLING DESIGNED BY: M. HOYRUP
DGN NAME: 0:/PROJ2/WENATCHE/WE060S-A.DGN

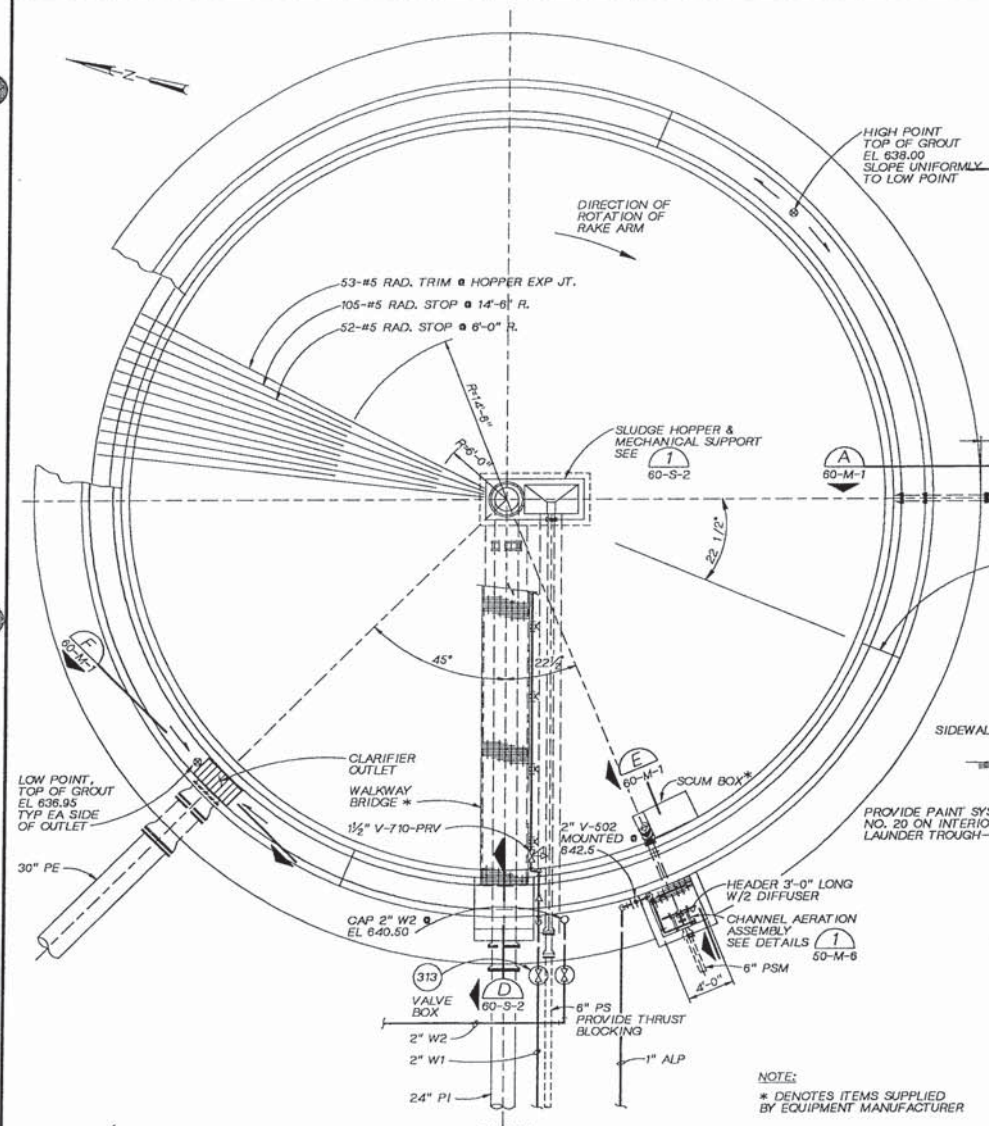

PLAN
3/16"=1'-0"

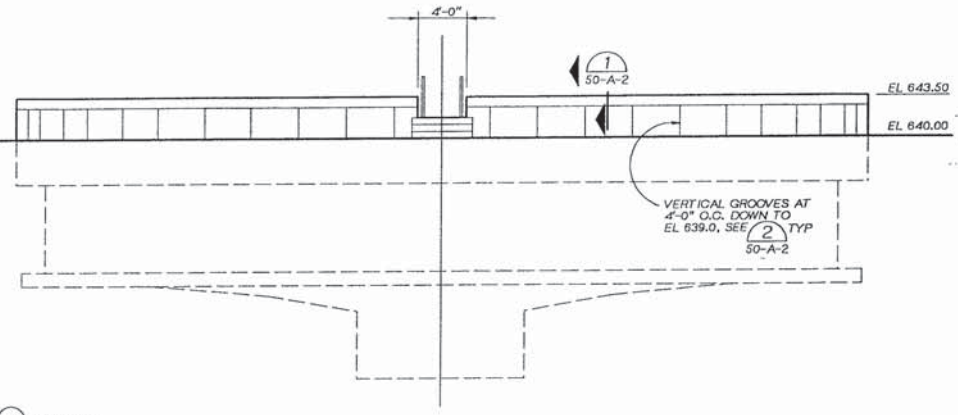

WEST ELEVATION (OTHERS SIMILAR)
NTS

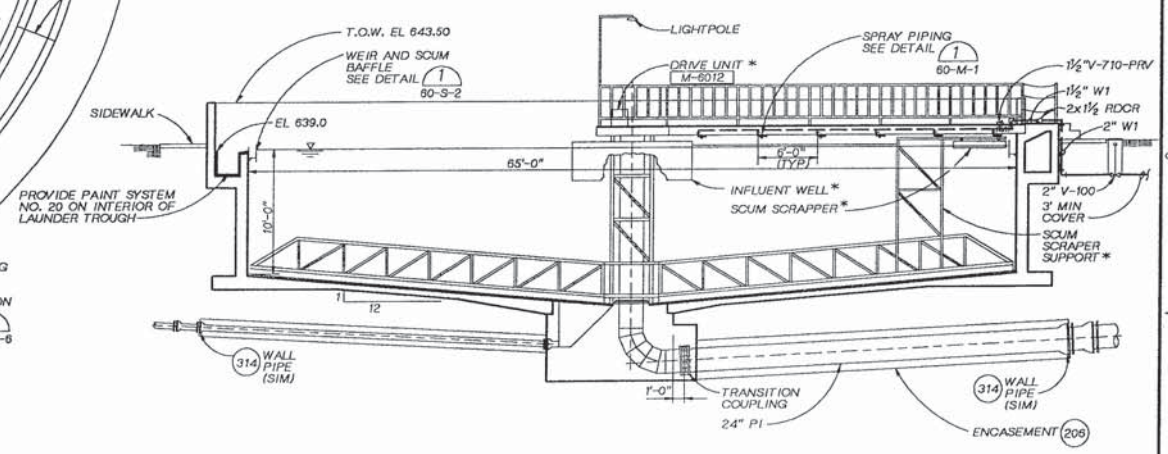

COMPOSITE SECTION THRU CLARIFIER
NTS

NOTE:
* DENOTES ITEMS SUPPLIED BY EQUIPMENT MANUFACTURER

KAREN A. HOOD STATE OF WASHINGTON REGISTERED PROFESSIONAL ENGINEER

CH2M HILL	DSGN M. HOYRUP				
	DR J. BROWN				
	CHK L. ARAGON				
	APVD K HOOD	NO.	DATE	REVISION	BY	APVD

REUSE OF DOCUMENTS
THIS DOCUMENT, AND THE IDEAS AND DESIGNS INCORPORATED HEREIN, AS AN INSTRUMENT OF PROFESSIONAL SERVICE, IS THE PROPERTY OF CH2M HILL AND IS NOT TO BE USED, IN WHOLE OR IN PART, FOR ANY OTHER PROJECT WITHOUT THE WRITTEN AUTHORIZATION OF CH2M HILL.
©CH2M HILL

BAR IS ONE INCH ON ORIGINAL DRAWING. 0 1"
IF NOT ONE INCH ON THIS SHEET, ADJUST SCALES ACCORDINGLY.

CITY OF WENATCHEE, WASHINGTON
WASTEWATER TREATMENT PLANT IMPROVEMENTS

PRIMARY CLARIFIER
PLAN AND SECTIONS

DWG NO. 60-S-1
DATE NOV. 1990
PROJ NO. SEA24579.N1

DATE: 11-06-90 CJB
DRAWN BY: M. SPARLING DESIGNED BY: M. HOYRUP
DGN NAME: 0:/PROJ2/WENATCHE/WE060S-B.DGN

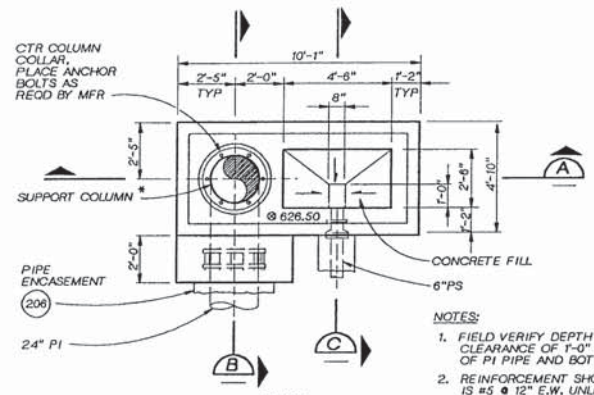

PLAN

NOTES:

1. FIELD VERIFY DEPTH OF SUPPORT FOR MIN CLEARANCE OF 1'-0" BETWEEN BOTTOM OF PI PIPE AND BOTTOM OF SUPPORT.
2. REINFORCEMENT SHOWN ON SECTIONS IS #5 @ 12" E.W. UNLESS NOTED OTHERWISE.

SLUDGE HOPPER AND MECHANISM SUPPORT (1)

3/8" = 1'-0" 60-S-1

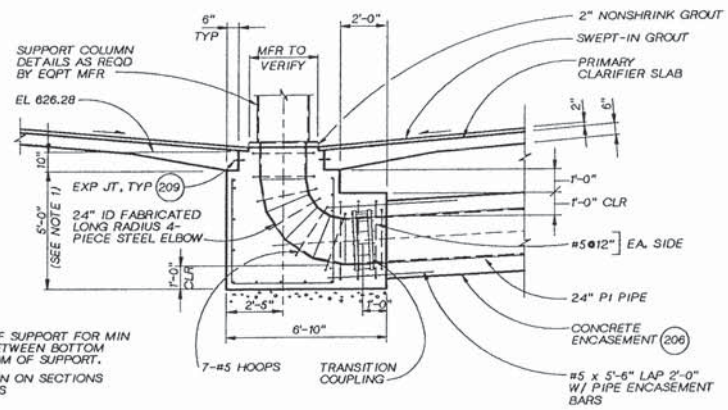

SECTION (B)

3/8" = 1'-0"

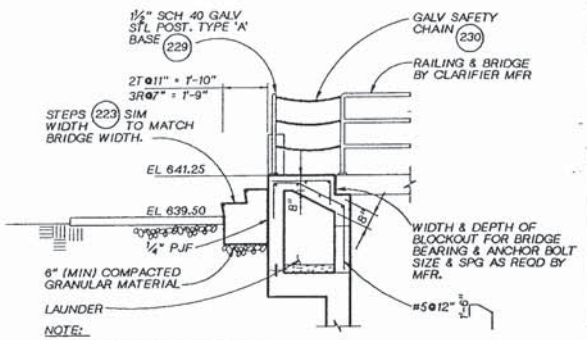

NOTE:

1. CONCRETE SLAB OVER LAUNDER IS 6" WIDER THAN BRIDGE, EACH SIDE.
2. REINF IS #5@12" EW.

SECTION (D)

3/8" = 1'-0" 60-S-2

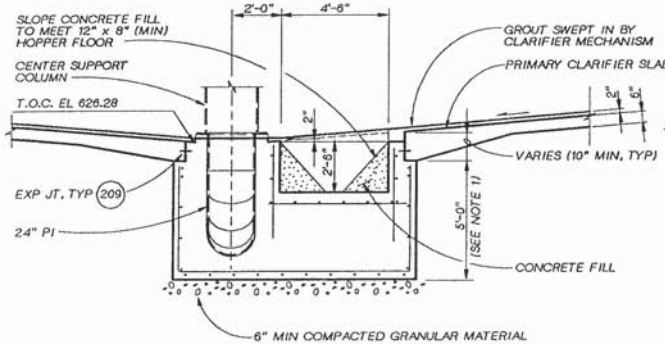

SECTION (A)

3/8" = 1'-0"

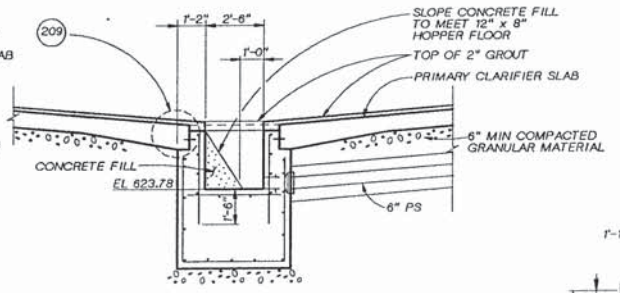

SECTION (C)

3/8" = 1'-0"

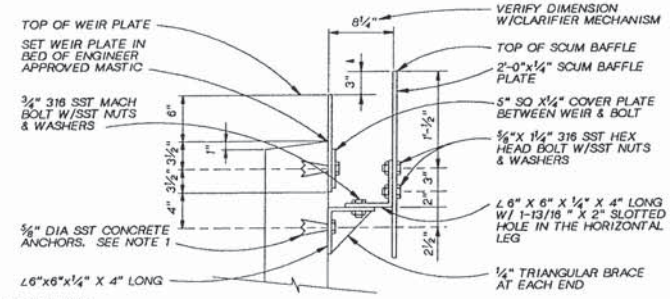

WEIR AND BAFFLE SECTION

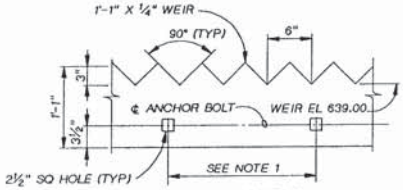

WEIR PLATE DETAIL

NOTES:

1. SCUM BAFFLE ANCHORS SHALL BE EQUALLY SPACED AT 4' - 0" O.C. MAX. PLACE WEIR ANCHORS AT 2' - 0" O.C. MAX OR AS RECOMMENDED BY MFR
2. ALL PARTS EXCEPT FASTENERS SHALL BE STEEL PLATE COATED WITH PAINT SYSTEM NO. 2, PRIOR TO BOLTING.
3. PROVIDE WEIR CLOSURE DETAIL SIMILAR TO DETAIL (303) AT EITHER SIDE OF SCUM TROUGH AND WALKWAY BRIDGE
4. STEEL TROWEL TOP OF CONCRETE TO OBTAIN SMOOTH DENSE FINISH

PRIMARY CLARIFIER "V" NOTCH WEIR AND BAFFLE ASSEMBLY

DETAIL (2)

NTS 60-S-1

KAREN A. HOOD — STATE OF WASHINGTON — PROFESSIONAL ENGINEER

CH2M HILL

DSGN	M HOYRUP				
DR	M SPARLING				
CHK	L ARAGON				
APVD	K HOOD	NO.	DATE	REVISION	BY / APVD

REUSE OF DOCUMENTS
THIS DOCUMENT, AND THE IDEAS AND DESIGNS INCORPORATED HEREIN, AS AN INSTRUMENT OF PROFESSIONAL SERVICE, IS THE PROPERTY OF CH2M HILL AND IS NOT TO BE USED, IN WHOLE OR IN PART, FOR ANY OTHER PROJECT WITHOUT THE WRITTEN AUTHORIZATION OF CH2M HILL.
©CH2M HILL

BAR IS ONE INCH ON ORIGINAL DRAWING. 0 1"
IF NOT ONE INCH ON THIS SHEET, ADJUST SCALES ACCORDINGLY.

CITY OF WENATCHEE, WASHINGTON
WASTEWATER TREATMENT PLANT IMPROVEMENTS

PRIMARY CLARIFIER
STRUCTURAL / MECHANICAL PLANS AND SECTIONS

DWG NO. 60-S-2
DATE NOV. 1990
PROJ NO. SEA24579.N1

DATE: 11/06/90 BRC
DRAWN BY: R. FRIBERG DESIGNED BY: M. HOYRUP
DGN NAME: O:/PROJ2/WENATCHE/WE060M-A.DGN

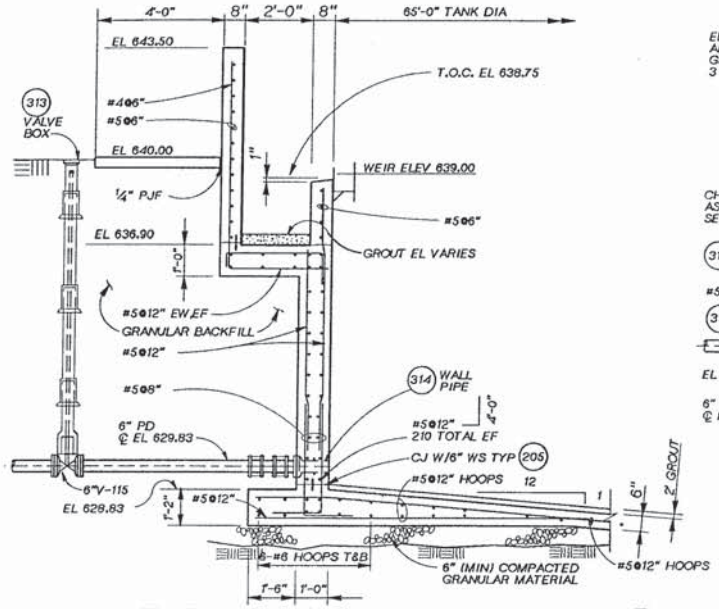

TYPICAL WALL SECTION (A)
1/2" = 1'-0" 60-S-1

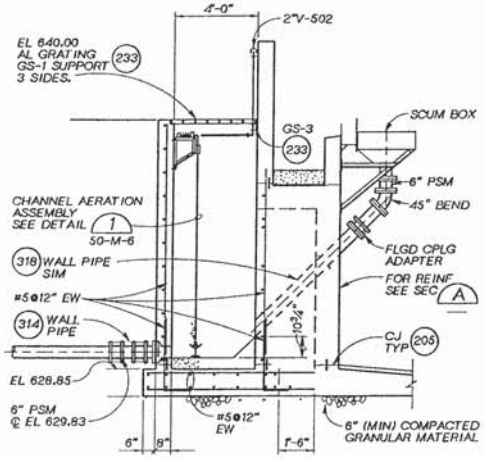

SECTION (E)
3/8" = 1'-0" 60-S-1

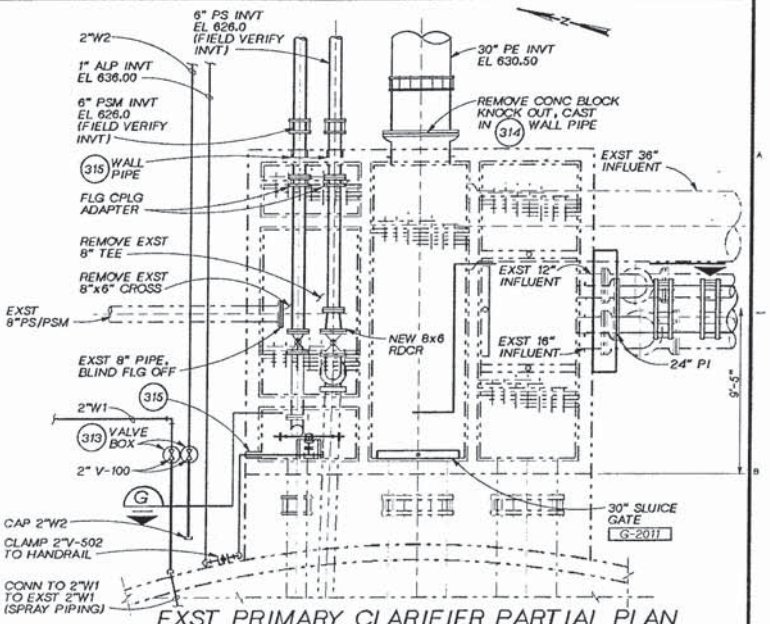

EXST PRIMARY CLARIFIER PARTIAL PLAN
3/8" = 1'-0"

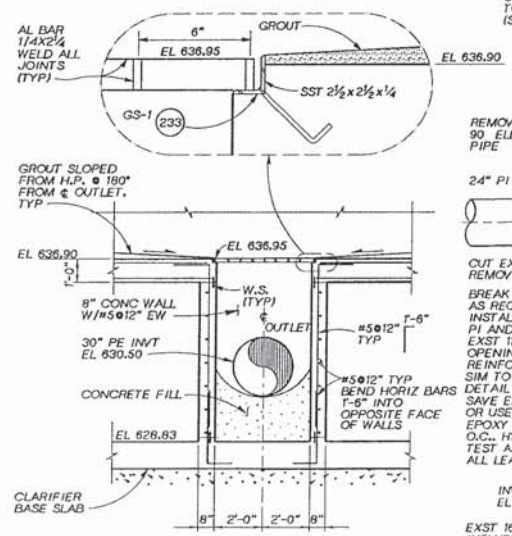

SECTION (F)
3/8" = 1'-0" 60-S-1

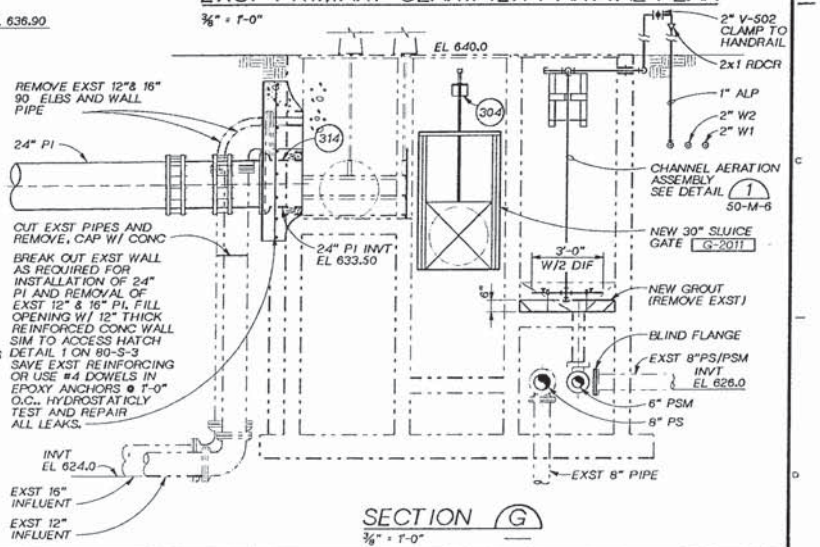

SECTION (G)
3/8" = 1'-0"

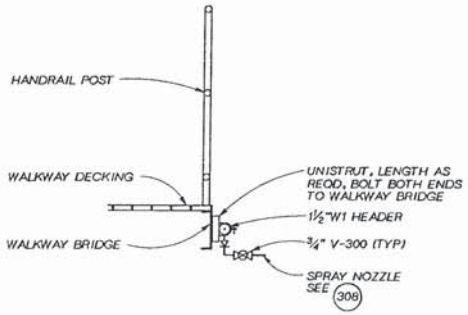

ELEVATION

SPRAY PIPING DETAIL (1)
NTS 60-S-1

KAREN A. HOOD — STATE OF WASHINGTON — PROFESSIONAL ENGINEER

CH2M-HILL

DSGN	M. HOYRUP				
DR	R. FRIBERG				
CHK	L. ARAGON				
APVD	K. HOOD	NO.	DATE	REVISION	BY	APVD

REUSE OF DOCUMENTS
THIS DOCUMENT, AND THE IDEAS AND DESIGNS INCORPORATED HEREIN, AS AN INSTRUMENT OF PROFESSIONAL SERVICE, IS THE PROPERTY OF CH2M HILL AND IS NOT TO BE USED, IN WHOLE OR IN PART, FOR ANY OTHER PROJECT WITHOUT THE WRITTEN AUTHORIZATION OF CH2M HILL.
©CH2M HILL

VERIFY SCALE
BAR IS ONE INCH ON ORIGINAL DRAWING.
0 1"
IF NOT ONE INCH ON THIS SHEET, ADJUST SCALES ACCORDINGLY.

CITY OF WENATCHEE, WASHINGTON
WASTEWATER TREATMENT PLANT IMPROVEMENTS

PRIMARY CLARIFIER
STRUCTURAL AND MECHANICAL PLAN, SECTIONS AND DETAILS

DWG NO. 60-M-1
DATE NOV. 1990
PROJ. NO. SEA24579.N1

DATE: 11-03-90 KJH
DRAWN BY: B. CARR DESIGNED BY: S. HILDRETH
DGN NAME: 0:/PROJ2/WENATCHE/WE070M-A.DGN

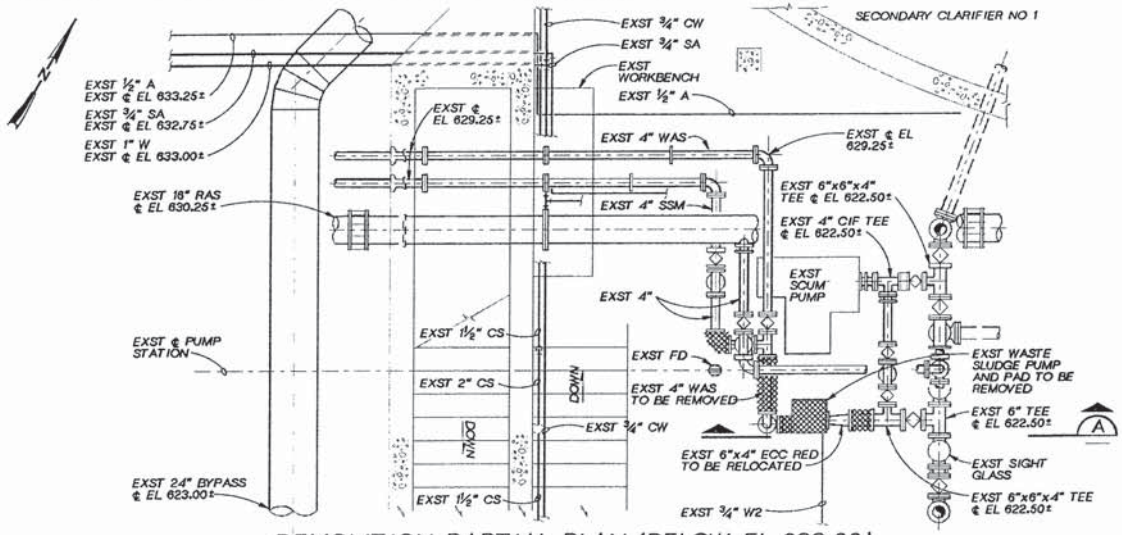

DEMOLITION PARTIAL PLAN (BELOW EL 632.00)
⅜"=1'-0"

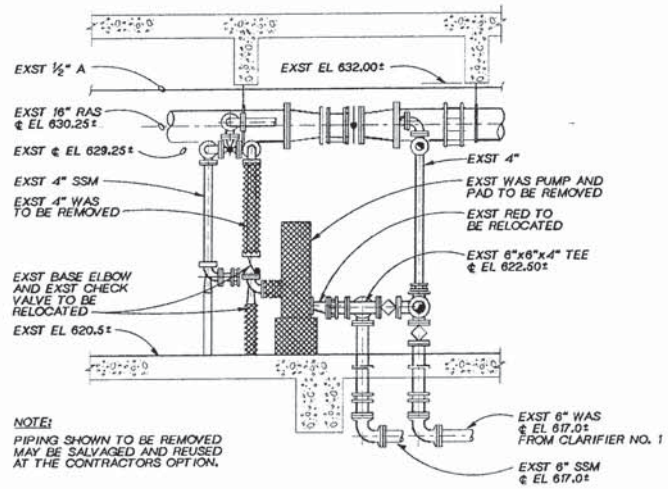

NOTE:
PIPING SHOWN TO BE REMOVED MAY BE SALVAGED AND REUSED AT THE CONTRACTORS OPTION.

SECTION A
⅜"=1'-0"

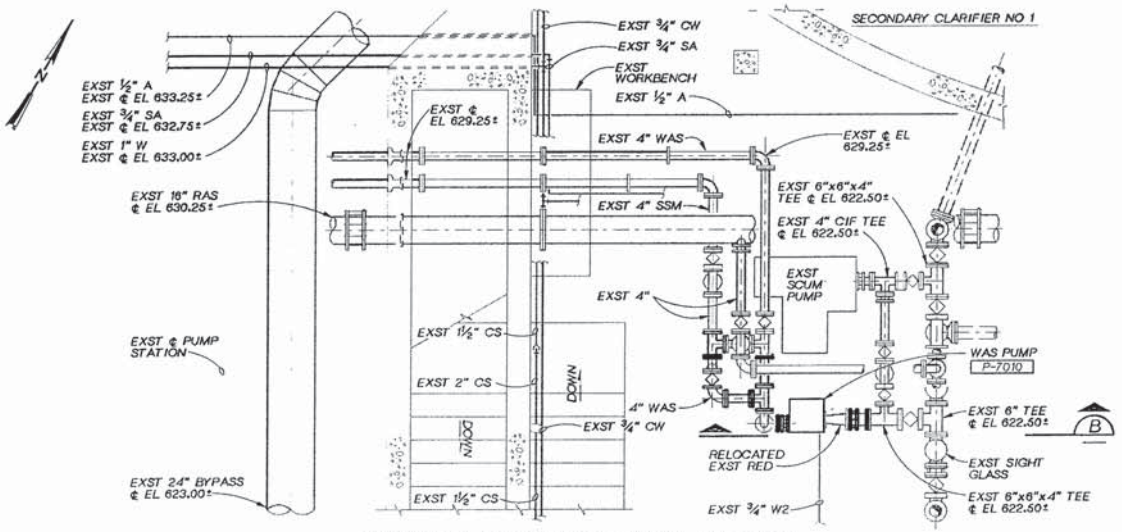

PARTIAL PLAN (BELOW EL 632.00)
⅜"=1'-0"

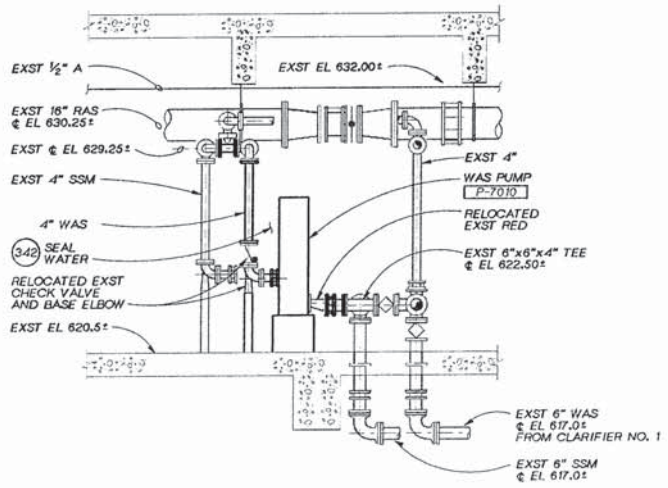

SECTION B
⅜"=1'-0"

NOTE:
LOCATIONS OF EXISTING PIPING AND STRUCTURES ARE APPROXIMATE AND MUST BE FIELD VERIFIED.

KAREN A. HOOD — STATE OF WASHINGTON — PROFESSIONAL ENGINEER

CH2M HILL

DSGN	S. HILDRETH
DR	B. CARR
CHK	R. STAEHLIN
APVD	K HOOD

NO.	DATE	REVISION	BY	APVD

REUSE OF DOCUMENTS
THIS DOCUMENT, AND THE IDEAS AND DESIGNS INCORPORATED HEREIN, AS AN INSTRUMENT OF PROFESSIONAL SERVICE, IS THE PROPERTY OF CH2M HILL AND IS NOT TO BE USED, IN WHOLE OR IN PART, FOR ANY OTHER PROJECT WITHOUT THE WRITTEN AUTHORIZATION OF CH2M HILL.
©CH2M HILL

BAR IS ONE INCH ON ORIGINAL DRAWING. 0 1"
IF NOT ONE INCH ON THIS SHEET, ADJUST SCALES ACCORDINGLY.

CITY OF WENATCHEE, WASHINGTON
WASTEWATER TREATMENT PLANT IMPROVEMENTS

WAS PUMPING FACILITY MODIFICATIONS
MECHANICAL PLAN AND DETAILS

DWG NO. 70-M-1
DATE NOV. 1990
PROJ NO. SEA24579.N1

DATE: 10-31-90 DLC
DRAWN BY: E.RONSHAUGEN DESIGNED BY: G. SAKAGAWA
DGN NAME: O:/PROJ2/WENATCHE/WE075M-A.DGN

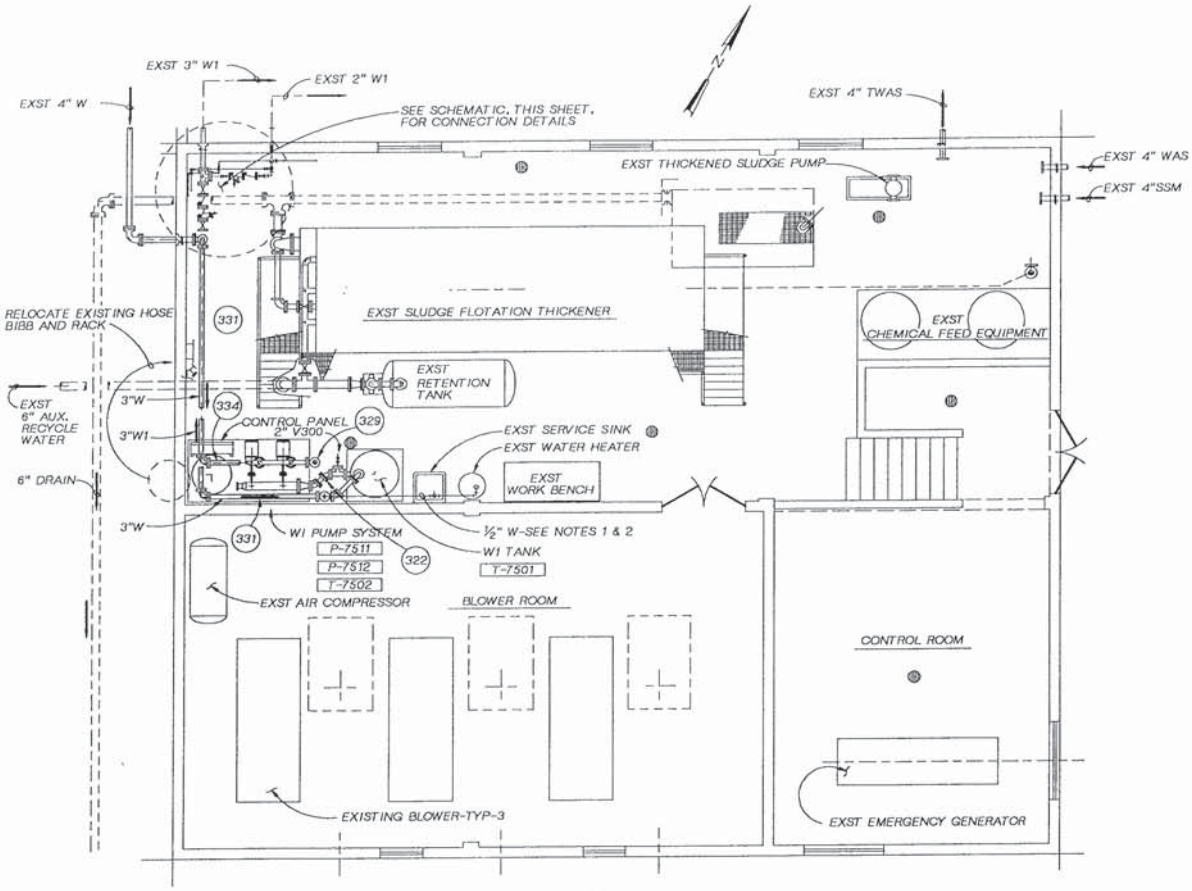

PLAN

¼" = 1'- 0"

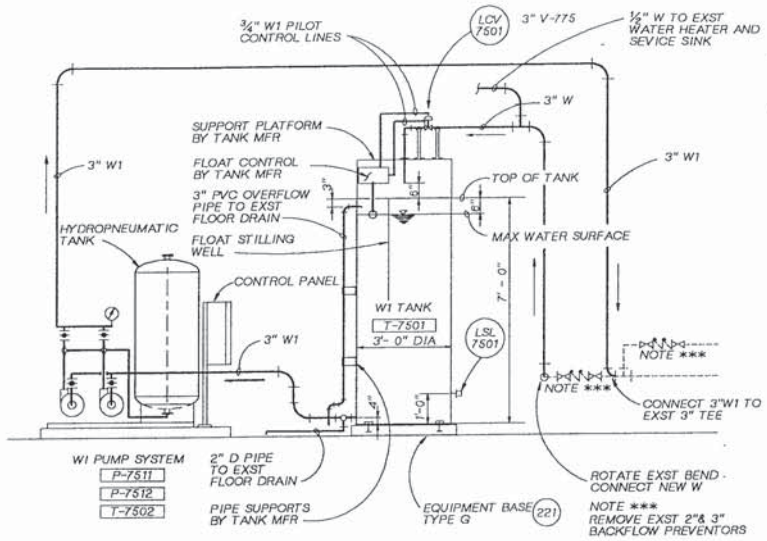

W1 SYSTEM SCHEMATIC

NTS (SEE PLAN - THIS SHEET FOR LOCATIONS)

NOTES:

1. PROVIDE POTABLE WATER TO EXISTING WATER HEATER AND SINK. CUT AND CAP ENDS TO ISOLATE W SYSTEM, TO THE WATER HEATER AND SINK. FROM THE EXISTING W1 SYSTEM.
2. PROVIDE CONTINUITY TO EXISTING W1 SYSTEM. RECONNECT THE LOCATIONS CUT IN NOTE 1 ABOVE.
3. FOR CONTINUATION OF PIPING OUTSIDE BUILDING, SEE DWGS 20-C-6 AND 20-C-8.

KAREN A. HOOD STATE OF WASHINGTON PROFESSIONAL ENGINEER

CH2M HILL

DSGN	G.SAKAGAWA
DR	E.RONSHAUGEN
CHK	R STAEHLIN
APVD	K HOOD

NO.	DATE	REVISION	BY	APVD

REUSE OF DOCUMENTS
THIS DOCUMENT, AND THE IDEAS AND DESIGNS INCORPORATED HEREIN, AS AN INSTRUMENT OF PROFESSIONAL SERVICE, IS THE PROPERTY OF CH2M HILL AND IS NOT TO BE USED, IN WHOLE OR IN PART, FOR ANY OTHER PROJECT WITHOUT THE WRITTEN AUTHORIZATION OF CH2M HILL.
©CH2M HILL

SCALE 1:1
BAR IS ONE INCH ON ORIGINAL DRAWING.
0 1"
IF NOT ONE INCH ON THIS SHEET, ADJUST SCALES ACCORDINGLY.

CITY OF WENATCHEE, WASHINGTON
WASTEWATER TREATMENT PLANT IMPROVEMENTS

BLOWER BUILDING
MODIFICATIONS
W1 SYSTEM PLAN & DETAILS

DWG NO. 75-M-1
DATE NOV. 1990
PROJ NO. SEA24579.N1

DATE: 11-05-90
DRAWN BY: BB LAZARO DESIGNED BY: JO HANSEN
DGN NAME: G:/PROJ2/WENATCHE/ WE080A-A.DGN

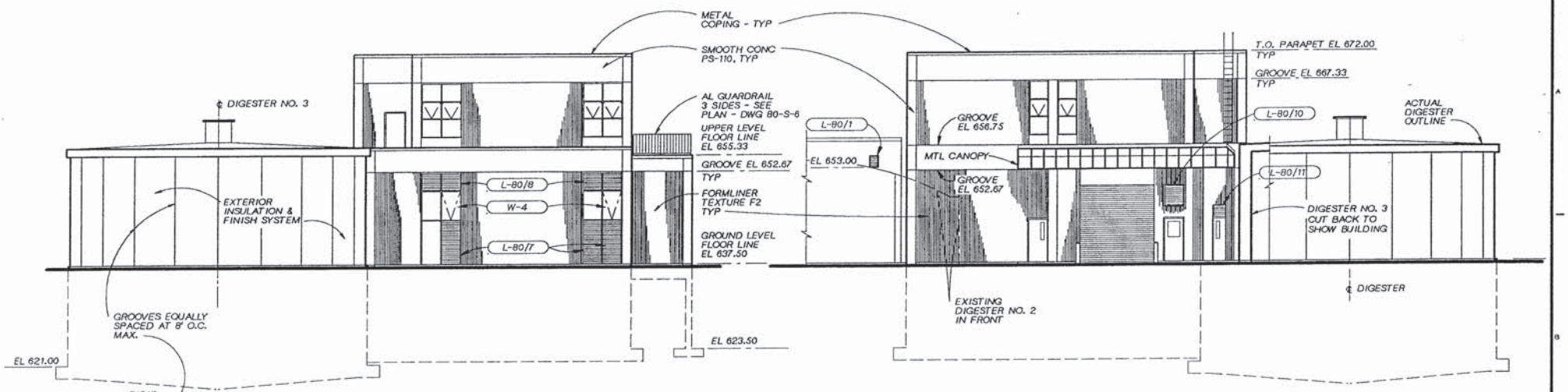

NORTH ELEVATION
1/8"=1'-0"

EAST ELEVATION
1/8"=1'-0"

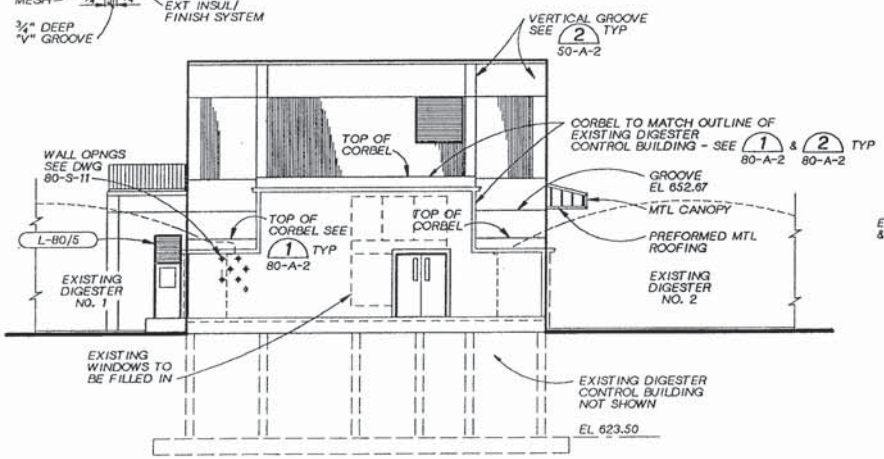

SOUTH ELEVATION
1/8"=1'-0"

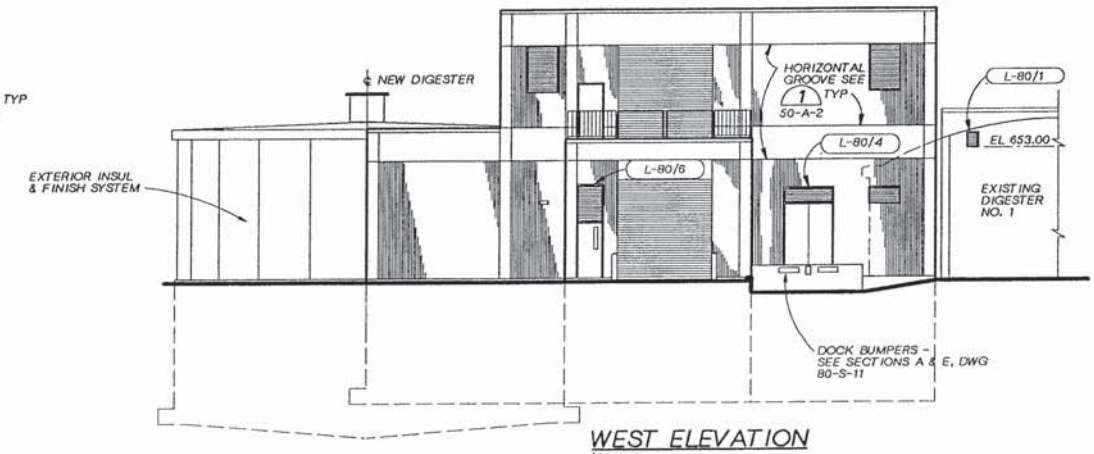

WEST ELEVATION
1/8"=1'-0"

3946 REGISTERED ARCHITECT JOHN O. HANSEN STATE OF WASHINGTON

CH2M HILL

DSGN	JO HANSEN
DR	GE BOWER
CHK	C FILANOWICZ
APVD	K HOOD

NO.	DATE	REVISION	BY	APVD

REUSE OF DOCUMENTS
THIS DOCUMENT, AND THE IDEAS AND DESIGNS INCORPORATED HEREIN, AS AN INSTRUMENT OF PROFESSIONAL SERVICE, IS THE PROPERTY OF CH2M HILL AND IS NOT TO BE USED, IN WHOLE OR IN PART, FOR ANY OTHER PROJECT WITHOUT THE WRITTEN AUTHORIZATION OF CH2M HILL.
©CH2M HILL

BAR IS ONE INCH ON ORIGINAL DRAWING. 0 1"
IF NOT ONE INCH ON THIS SHEET, ADJUST SCALES ACCORDINGLY.

CITY OF WENATCHEE, WASHINGTON
WASTEWATER TREATMENT PLANT IMPROVEMENTS

SOLIDS HANDLING BUILDING
ARCHITECTURAL ELEVATIONS

DWG NO. 80-A-1
DATE NOV. 1990
PROJ. NO. SEA24579.N1

DATE: 11-01-90
DRAWN BY: BB LAZARO DESIGNED BY: J.HANSEN
DGN NAME: O:/PROJ2/WENATCHE/WE080A-B.DGN

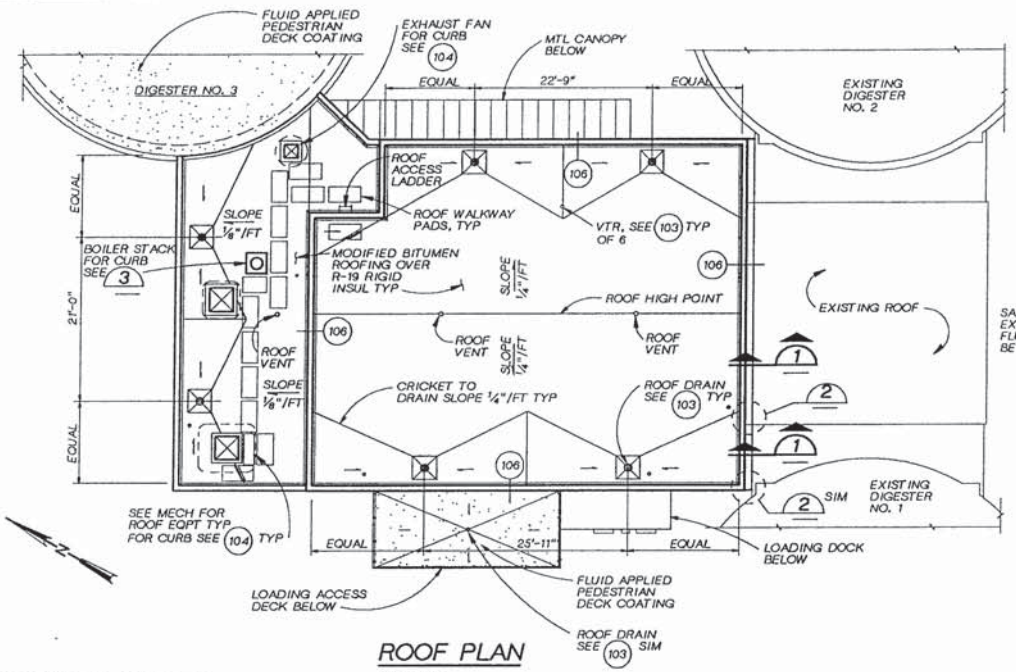

ROOF PLAN

1/8" = 1'-0"

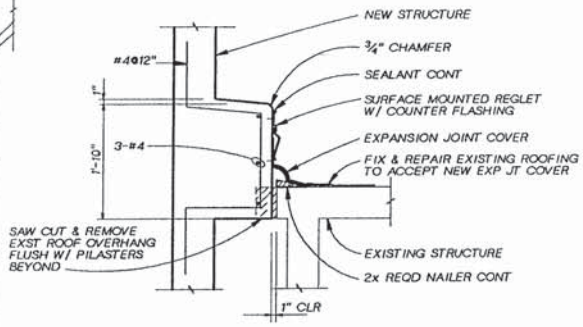

DETAIL 1

1"=1'-0"

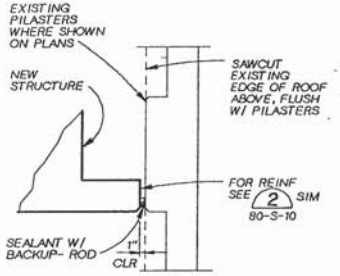

DETAIL 2

1"=1'-0"

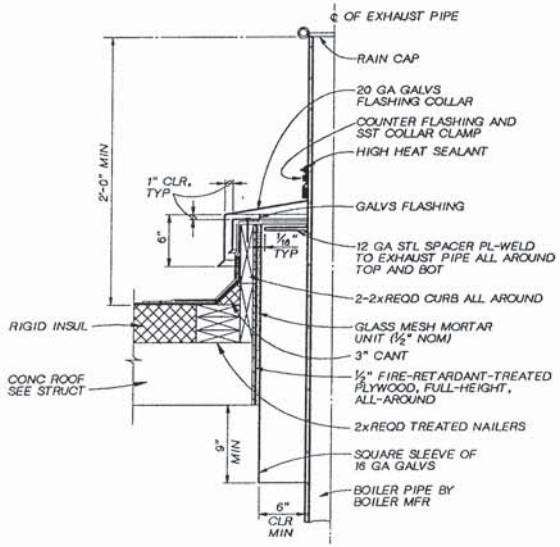

BOILER STACK CURB 3

NTS

GENERAL NOTES

1. UNLESS OTHERWISE NOTED, PLAN DIMENSIONS ARE TO NOMINAL FACE OF MASONRY, FACE OF STUDS, AND FACE OF CONCRETE.
2. FLOOR LINE REFERS TO TOP OF CONCRETE SLABS AT THE HIGH POINT. FINISH FLOORING IS INSTALLED ABOVE THE FLOOR LINE. FOR DEPRESSED FLOORS, CURBS AND FLOOR SLOPES, SEE STRUCTURAL DRAWINGS.
3. FIGURE DIMENSIONS TAKE PRECEDENCE OVER SCALE DRAWINGS.
4. WHERE DOOR IS LOCATED NEAR CORNER OF ROOM AND IS NOT LOCATED BY DIMENSION, IT SHALL BE 6" FROM FACE OF WALL TO DOOR OPENING.
5. REFER TO STRUCTURAL, MECHANICAL, ELECTRICAL AND OTHER CATEGORIES OF DRAWINGS FOR ADDITIONAL NOTES.
6. FOR DOOR AND HARDWARE SCHEDULE, SEE SECTION 08000 OF THE SPECIFICATIONS.
7. FOR INTERIOR FINISH SCHEDULE AND COLOR LIST, SEE SECTION 09000 OF THE SPECIFICATIONS.
8. FOR ABBREVIATIONS, SEE DWG 10-G-3.
9. FOR MATERIALS LEGEND, SEE DWG 10-G-8.
10. FOR PAINT SYSTEMS (PS-), SEE SPECIFICATIONS SECTION 09900.
11. SEE DWG 250-D-3 FOR WINDOW SCHEDULE, LOUVER & VENT SCHEDULE.

BUILDING CODE NOTES (1988 UBC)

1. OCCUPANCY: B-2
2. CONSTRUCTION TYPE: V-N
3. NUMBER OF STORIES: 2 + BASEMENT
4. FLOOR AREAS:

	ACTUAL	ALLOWABLE
BASEMENT:	1,910 SF	16,000 SF
GROUND FLOOR:	4,850 SF	16,000 SF
SECOND FLOOR:	2,295 SF	16,000 SF
TOTAL:	9,055 SF	48,000 SF

5. BASEMENT FULLY SPRINKLERED.

REGISTERED ARCHITECT JOHN O. HANSEN STATE OF WASHINGTON

CH2M HILL

DSGN JO HANSEN
DR BB LAZARO
CHK C FILANOWICZ
APVD K HOOD

NO.	DATE	REVISION	BY	APVD

REUSE OF DOCUMENTS
THIS DOCUMENT, AND THE IDEAS AND DESIGNS INCORPORATED HEREIN, AS AN INSTRUMENT OF PROFESSIONAL SERVICE, IS THE PROPERTY OF CH2M HILL AND IS NOT TO BE USED, IN WHOLE OR IN PART, FOR ANY OTHER PROJECT WITHOUT THE WRITTEN AUTHORIZATION OF CH2M HILL.
©CH2M HILL

BAR IS ONE INCH ON ORIGINAL DRAWING. 0 1"
IF NOT ONE INCH ON THIS SHEET, ADJUST SCALES ACCORDINGLY.

CITY OF WENATCHEE, WASHINGTON
WASTEWATER TREATMENT PLANT IMPROVEMENTS

SOLIDS HANDLING FACILITY
ARCHITECTURAL
ROOF PLAN AND DETAILS

DWG NO. 80-A-2
DATE NOV. 1990
PROJ NO. SEA24579.N1

DATE: 11-05-90 DM
DRAWN BY: R. FRIBERG DESIGNED BY: M. HOYRUP
DGN NAME: G:/PROJ2/WENATCHE/WE080S-E.DGN

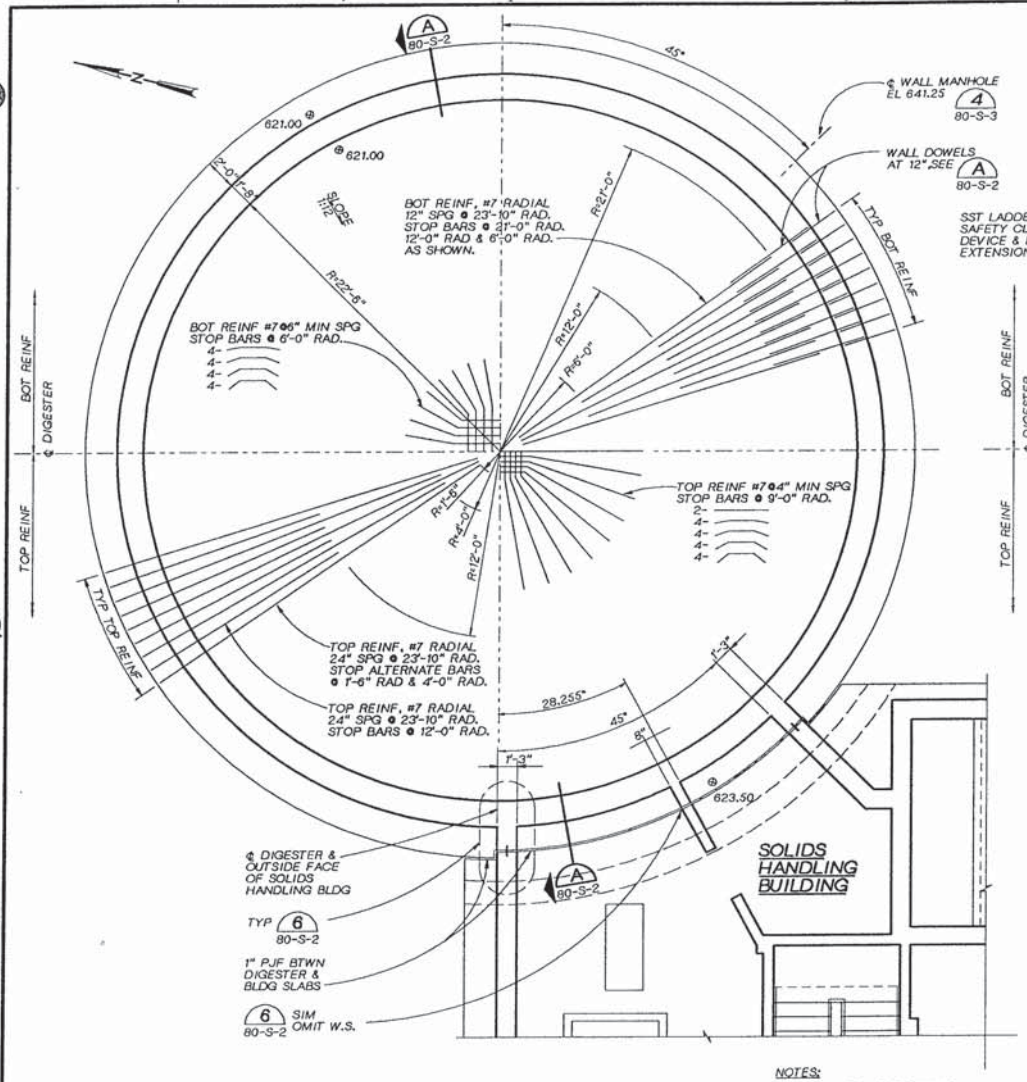

FOUNDATION PLAN

¼"=1'-0"

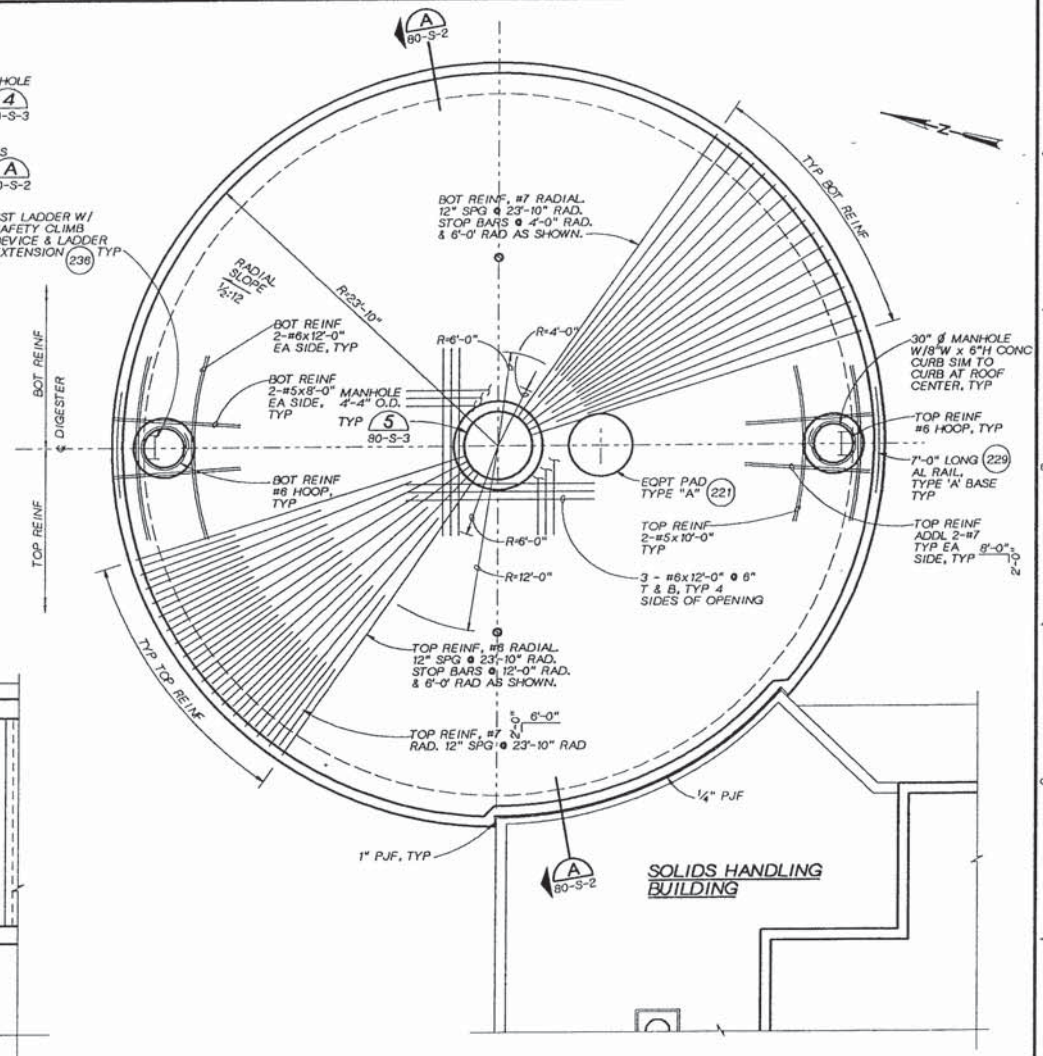

ROOF PLAN

¼"=1'-0"

NOTES:

1. PARTIAL REINF SHOWN IS TYPICAL FOR EACH QUADRANT.
2. FOR HOOP REINF SEE A 80-S-2
3. ROOF LIVE LOAD = 100 PSF
4. FOR ROOF PENETRATIONS SEE MECHANICAL DWGS.

MONS L. HOYRUP — STATE OF WASHINGTON — REGISTERED PROFESSIONAL ENGINEER

CH2M HILL

DSGN	M. HOYRUP
DR	R. FRIBERG
CHK	L. ARAGON
APVD	K HOOD

NO.	DATE	REVISION	BY	APVD

REUSE OF DOCUMENTS
THIS DOCUMENT, AND THE IDEAS AND DESIGNS INCORPORATED HEREIN, AS AN INSTRUMENT OF PROFESSIONAL SERVICE, IS THE PROPERTY OF CH2M HILL AND IS NOT TO BE USED, IN WHOLE OR IN PART, FOR ANY OTHER PROJECT WITHOUT THE WRITTEN AUTHORIZATION OF CH2M HILL.
©CH2M HILL

BAR IS ONE INCH ON ORIGINAL DRAWING. 0 1" IF NOT ONE INCH ON THIS SHEET, ADJUST SCALES ACCORDINGLY.

CITY OF WENATCHEE, WASHINGTON
WASTEWATER TREATMENT PLANT IMPROVEMENTS

SOLIDS HANDLING FACILITY
ANAEROBIC DIGESTER FOUNDATION & ROOF PLANS

DWG NO. 80-S-1
DATE NOV. 1990
PROJ NO. SEA24579.N1

DATE: 11-05-90 DM
DRAWN BY: R. FRIBERG DESIGNED BY: M. HOYRUP
DGN NAME: O:/PROJ2/WENATCHE/WE080S-F.DGN

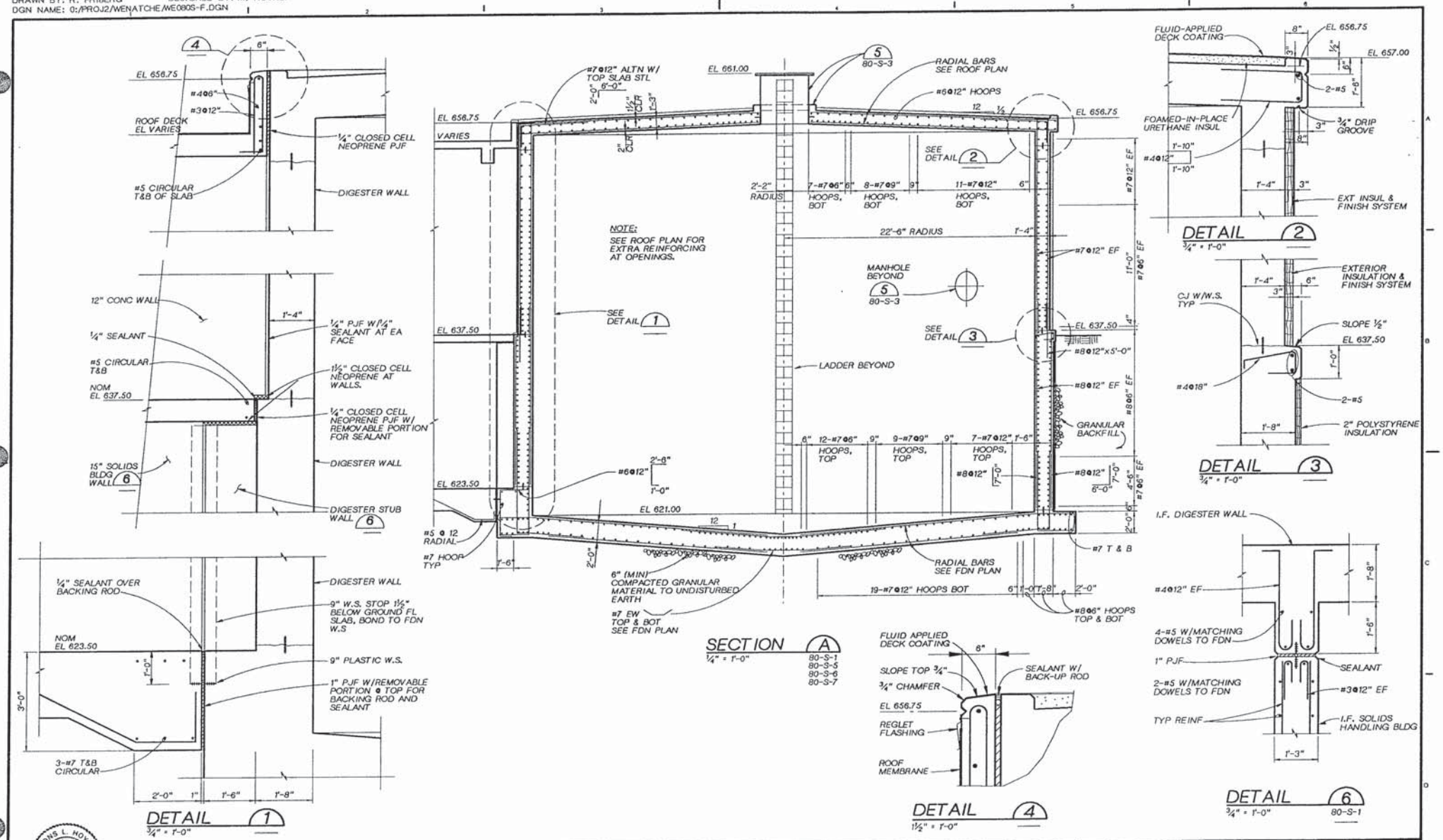

DSGN M. HOYRUP					
DR R. FRIBERG					
CHK L. ARAGON					
APVD K HOOD	NO.	DATE	REVISION	BY	APVD

CH2M HILL

REUSE OF DOCUMENTS
THIS DOCUMENT, AND THE IDEAS AND DESIGNS INCORPORATED HEREIN, AS AN INSTRUMENT OF PROFESSIONAL SERVICE, IS THE PROPERTY OF CH2M HILL AND IS NOT TO BE USED, IN WHOLE OR IN PART, FOR ANY OTHER PROJECT WITHOUT THE WRITTEN AUTHORIZATION OF CH2M HILL.
©CH2M HILL

BAR IS ONE INCH ON ORIGINAL DRAWING. 0 1"
IF NOT ONE INCH ON THIS SHEET, ADJUST SCALES ACCORDINGLY.

CITY OF WENATCHEE, WASHINGTON
WASTEWATER TREATMENT PLANT IMPROVEMENTS

SOLIDS HANDLING FACILITY
ANAEROBIC DIGESTER SECTIONS AND DETAILS

DWG NO. 80-S-2
DATE NOV. 1990
PROJ NO. SEA24579.N1

DATE: 11-05-90 DM
DRAWN BY: R. FRIBERG DESIGNED BY: M. HOYRUP
DGN NAME: 0:/PROJ2/WENATCHE/WE080S-K.DGN

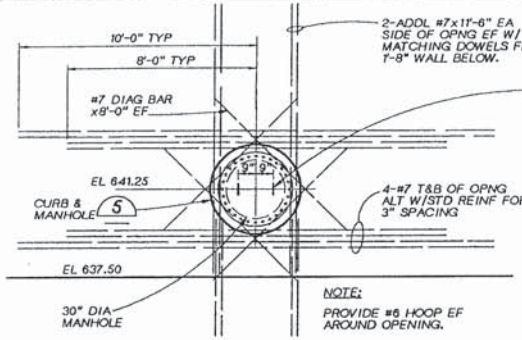

MANHOLE ELEVATION DIGESTER NO. 3 WALL

DETAIL 4

3/8" = 1'-0" 80-S-1

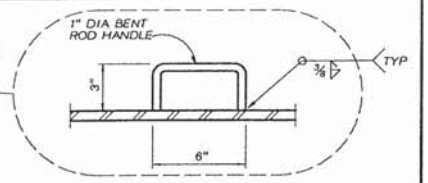

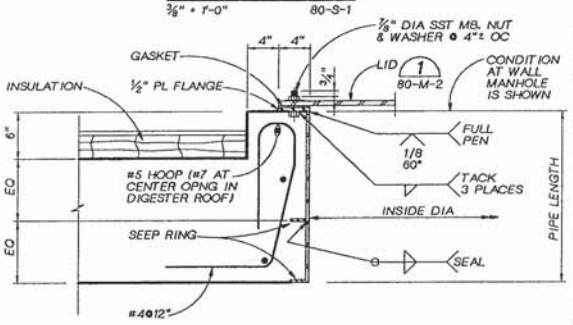

MANHOLE/MANWAY SCHEDULE					
LOCATION	INSIDE DIAMETER	PIPE WALL THICKNESS	LID THICKNESS	PIPE LENGTH	NO. OF BOLTS
DIGESTER ROOF	4'-3 1/4"	3/8"	3/8"	4'-6"	40
DIGESTER WALL	3'-0"	3/8"	1/2"	1'-10"	28

1. GASKETS SHALL BE 1/4" THICK RUBATEX WITH INSIDE DIA EQUAL TO PIPE INSIDE DIA AND OUTSIDE DIA EQUAL TO FLANGE OUTSIDE DIA.
2. FABRICATE EACH ENTIRE UNIT FROM 316L SST.
3. ALL WELDED JOINTS SHALL BE WATERTIGHT. GRIND EDGES SMOOTH.
4. SEEP RINGS SHALL BE 2 INCHES WIDE BY 3/8" THICK AND CONTINUOUSLY WELDED.
5. ALL NUTS, BOLTS AND WASHERS SHALL BE 316 SST.

DETAIL 5

1 1/2" = 1'-0" 80-S-1 80-S-2 80-S-3 80-M-2

A. DEMOLITION OF WALL BREAKOUT:

1. SAW CUT THE LIMIT LINES EACH FACE OF WALL TO A CLEAN 1-1/2-INCH PERPENDICULAR CUT. CUT SHALL BE PERPENDICULAR WITHOUT OVERRUN OUTSIDE THE LIMITS.
2. DRILL HOLES THROUGH THE WALL WITHIN THE SAW CUTS. SPACE HOLES CLOSELY TO ALLOW CONTROLLED BREAKING OF THE CONCRETE AND REMOVAL WITHIN LIMIT LINES WITHOUT DAMAGE TO ANY REBAR OR TO THE CONCRETE TO REMAIN. DISPOSE OF CONCRETE RUBBLE.
3. VERIFY REINFORCING SIZE AND LOCATION. COMPARE TO "AS CONSTRUCTED" DRAWINGS FURNISHED BY THE OWNER.
4. CUT ONLY BARS REQUIRED TO ALLOW MANHOLE INSTALLATION.

B. FORMS: PROVIDE TWO 18-INCH BY 18-INCH FORM WINDOWS AT MIDHEIGHT ALONG SIDES.

C. INSTALLATION OF THE MANHOLE:

1. INSTALL AND SECURE MANHOLE AND ALL NEW REINFORCING.
2. INSTALL BLOCKOUTS FOR GROOVES.
3. PREDAMPEN EXPOSED CONCRETE FOR 24 HOURS PRIOR TO PLACING CONCRETE AND ALLOW SURFACE TO DRY PRIOR TO PLACING CONCRETE.

D. DRY PACK GROUT:

1. AFTER CURING CONCRETE AS SPECIFIED, AIR DRY NEW CONCRETE FOR A 10-DAY PERIOD.
2. STRIP FORMS FROM DRY PACK GROUT CAVITY.
3. SAND BLAST OR POWER BRUSH CAVITY.
4. SOAK CAVITY WITH A COTTON MAT FOR A 24-HOUR PERIOD AND REMOVE SURFACE WATER.
5. COAT SURFACE OF CAVITY WITH A WATER-INSENSITIVE EPOXY BONDING AGENT.
6. WHILE EPOXY BONDING AGENT IS TACKY, HAMMER IN DRY PACK GROUT ALL AROUND USING A STEEL HAMMER AND STEEL TOOL TO PROVIDE A HARD DENSE PACK.
7. WATER CURE DRY PACK GROUT WITH WET COTTON MATS FOR A MINIMUM 4-DAY PERIOD.

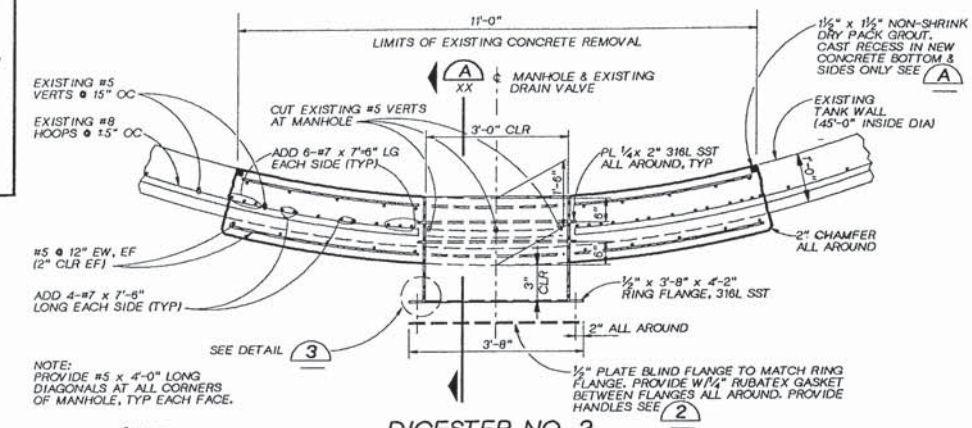

DIGESTER NO. 2 ACCESS HATCH 1

3/4" = 1'-0" 20-C-1

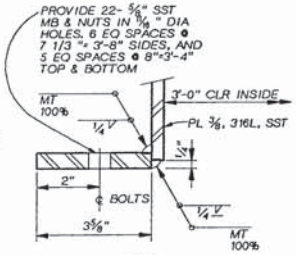

DETAIL 3

6"=1'-0"

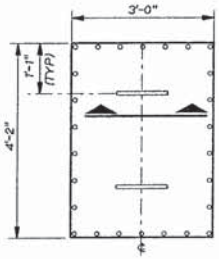

ELEVATION

3/4"=1'-0"

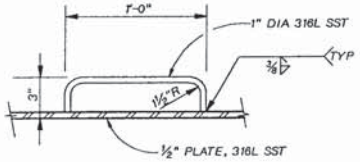

SECTION

NTS

BLIND FLANGE & HANDLES

DETAIL 2

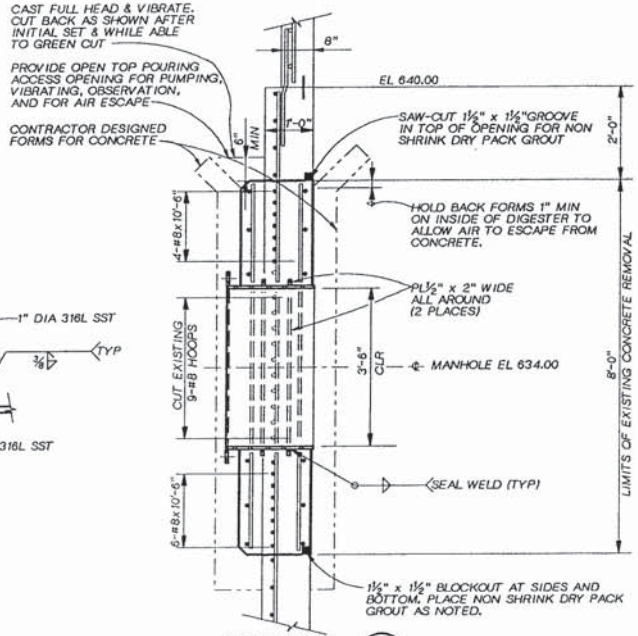

SECTION A

3/4" = 1'-0"

MONS L. HOYRUP STATE OF WASHINGTON REGISTERED PROFESSIONAL ENGINEER

CH2M HILL

DSGN	M. HOYRUP
DR	R. FRIBERG
CHK	L. ARAGON
APVD	K HOOD

NO.	DATE	REVISION	BY	APVD

REUSE OF DOCUMENTS
THIS DOCUMENT, AND THE IDEAS AND DESIGNS INCORPORATED HEREIN, AS AN INSTRUMENT OF PROFESSIONAL SERVICE, IS THE PROPERTY OF CH2M HILL AND IS NOT TO BE USED, IN WHOLE OR IN PART, FOR ANY OTHER PROJECT WITHOUT THE WRITTEN AUTHORIZATION OF CH2M HILL.
©CH2M HILL

BAR IS ONE INCH ON ORIGINAL DRAWING. 0 1"
IF NOT ONE INCH ON THIS SHEET, ADJUST SCALES ACCORDINGLY.

CITY OF WENATCHEE, WASHINGTON
WASTEWATER TREATMENT PLANT IMPROVEMENTS

SOLIDS HANDLING FACILITY
STRUCTURAL DETAILS

DWG NO. 80-S-3
DATE NOV. 1990
PROJ. NO. SEA24579.N1

DATE: 11-05-90
DRAWN BY: TW MCINTYRE DESIGNED BY: M HOYRUP
DGN NAME: O:/PROJ2/WENATCHE/ WE080S-A.DGN

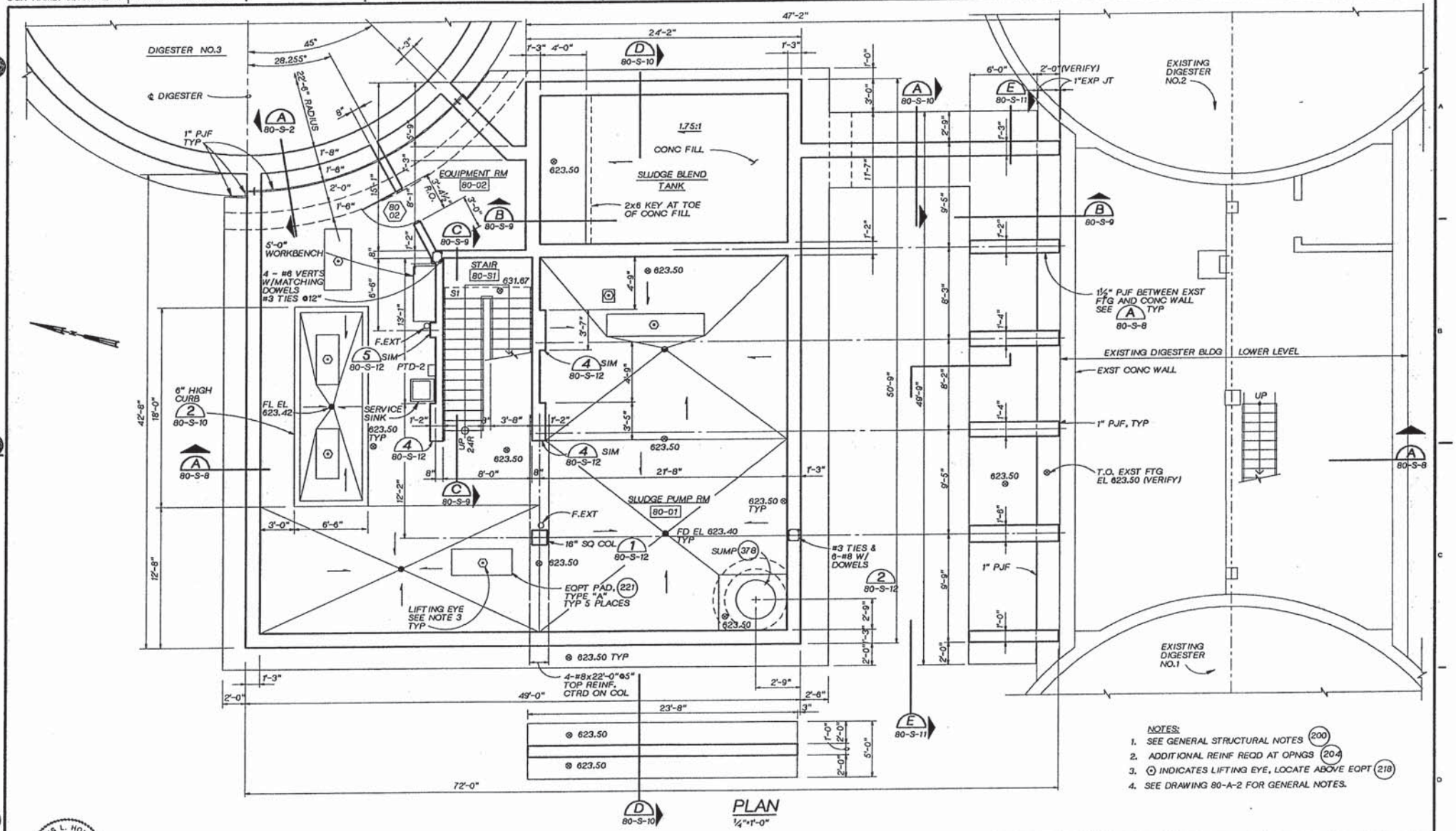

PLAN
1/4"=1'-0"

NOTES:
1. SEE GENERAL STRUCTURAL NOTES (200)
2. ADDITIONAL REINF REQD AT OPNGS (204)
3. ⊙ INDICATES LIFTING EYE, LOCATE ABOVE EQPT (218)
4. SEE DRAWING 80-A-2 FOR GENERAL NOTES.

DSGN ML HOYRUP					
DR TW MCINTYRE					
CHK L KORBUS					
APVD K HOOD	NO.	DATE	REVISION	BY	APVD

CH2M HILL

REUSE OF DOCUMENTS
THIS DOCUMENT, AND THE IDEAS AND DESIGNS INCORPORATED HEREIN, AS AN INSTRUMENT OF PROFESSIONAL SERVICE, IS THE PROPERTY OF CH2M HILL AND IS NOT TO BE USED, IN WHOLE OR IN PART, FOR ANY OTHER PROJECT WITHOUT THE WRITTEN AUTHORIZATION OF CH2M HILL.
©CH2M HILL

BAR IS ONE INCH ON ORIGINAL DRAWING.
0 1"
IF NOT ONE INCH ON THIS SHEET, ADJUST SCALES ACCORDINGLY.

CITY OF WENATCHEE, WASHINGTON
WASTEWATER TREATMENT PLANT IMPROVEMENTS

SOLIDS HANDLING FACILITY
STRUCTURAL/ARCH. FOUNDATION AND BASEMENT FLOOR PLAN

DWG NO. 80-S-4
DATE NOV. 1990
PROJ NO. SEA24579.N1

DATE: 11-05-90 DM
DRAWN BY: TW MCINTYRE DESIGNED BY: M HOYRUP
DGN NAME: 0:/PROJ2/WENATCHE/ WE080S-B.DGN

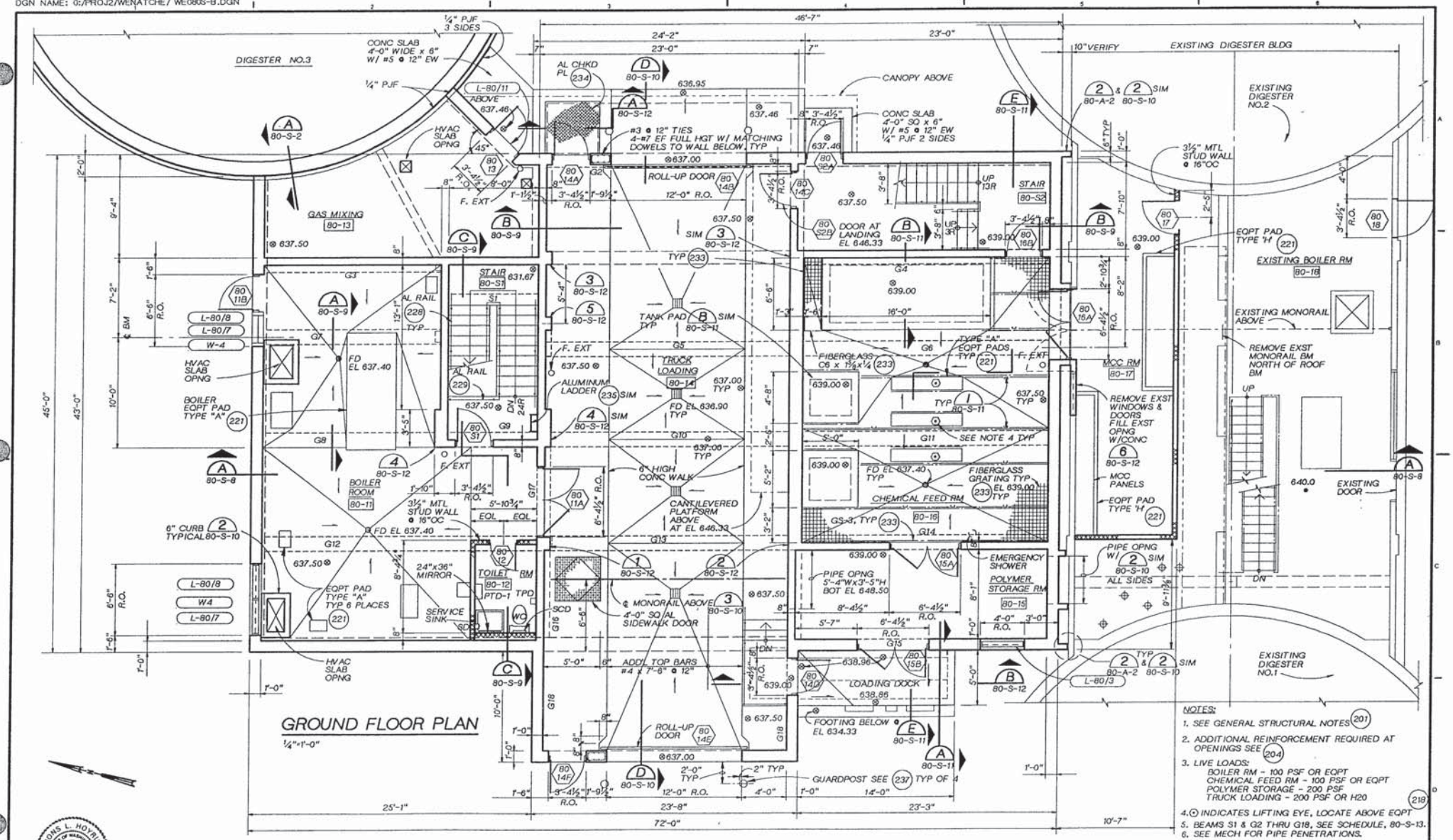

GROUND FLOOR PLAN

¼"=1'-0"

NOTES:

1. SEE GENERAL STRUCTURAL NOTES (201)
2. ADDITIONAL REINFORCEMENT REQUIRED AT OPENINGS SEE (204)
3. LIVE LOADS:
   BOILER RM - 100 PSF OR EQPT
   CHEMICAL FEED RM - 100 PSF OR EQPT
   POLYMER STORAGE - 200 PSF
   TRUCK LOADING - 200 PSF OR H20 (218)
4. ⊙ INDICATES LIFTING EYE, LOCATE ABOVE EQPT
5. BEAMS S1 & G2 THRU G18, SEE SCHEDULE, 80-S-13.
6. SEE MECH FOR PIPE PENETRATIONS.

MONS L. HOYRUP — STATE OF WASHINGTON — REGISTERED PROFESSIONAL ENGINEER

CH2M HILL

DSGN	ML HOYRUP
DR	TW MCINTYRE
CHK	L KORBUS
APVD	K HOOD

NO.	DATE	REVISION	BY	APVD

REUSE OF DOCUMENTS

THIS DOCUMENT, AND THE IDEAS AND DESIGNS INCORPORATED HEREIN, AS AN INSTRUMENT OF PROFESSIONAL SERVICE, IS THE PROPERTY OF CH2M HILL AND IS NOT TO BE USED, IN WHOLE OR IN PART, FOR ANY OTHER PROJECT WITHOUT THE WRITTEN AUTHORIZATION OF CH2M HILL.

©CH2M HILL

BAR IS ONE INCH ON ORIGINAL DRAWING.
0 1"
IF NOT ONE INCH ON THIS SHEET, ADJUST SCALES ACCORDINGLY.

CITY OF WENATCHEE, WASHINGTON
WASTEWATER TREATMENT PLANT IMPROVEMENTS

SOLIDS HANDLING FACILITY
STRUCTURAL/ARCHITECTURAL GROUND LEVEL FLOOR PLAN

DWG NO. 80-S-5
DATE NOV. 1990
PROJ NO. SEA24579.N1

DATE: 11-05-90 DM
DRAWN BY: TW MCINTYRE DESIGNED BY: M HOYRUP
DGN NAME: O:/PROJ2/WENATCHE/WE80S-C.DGN

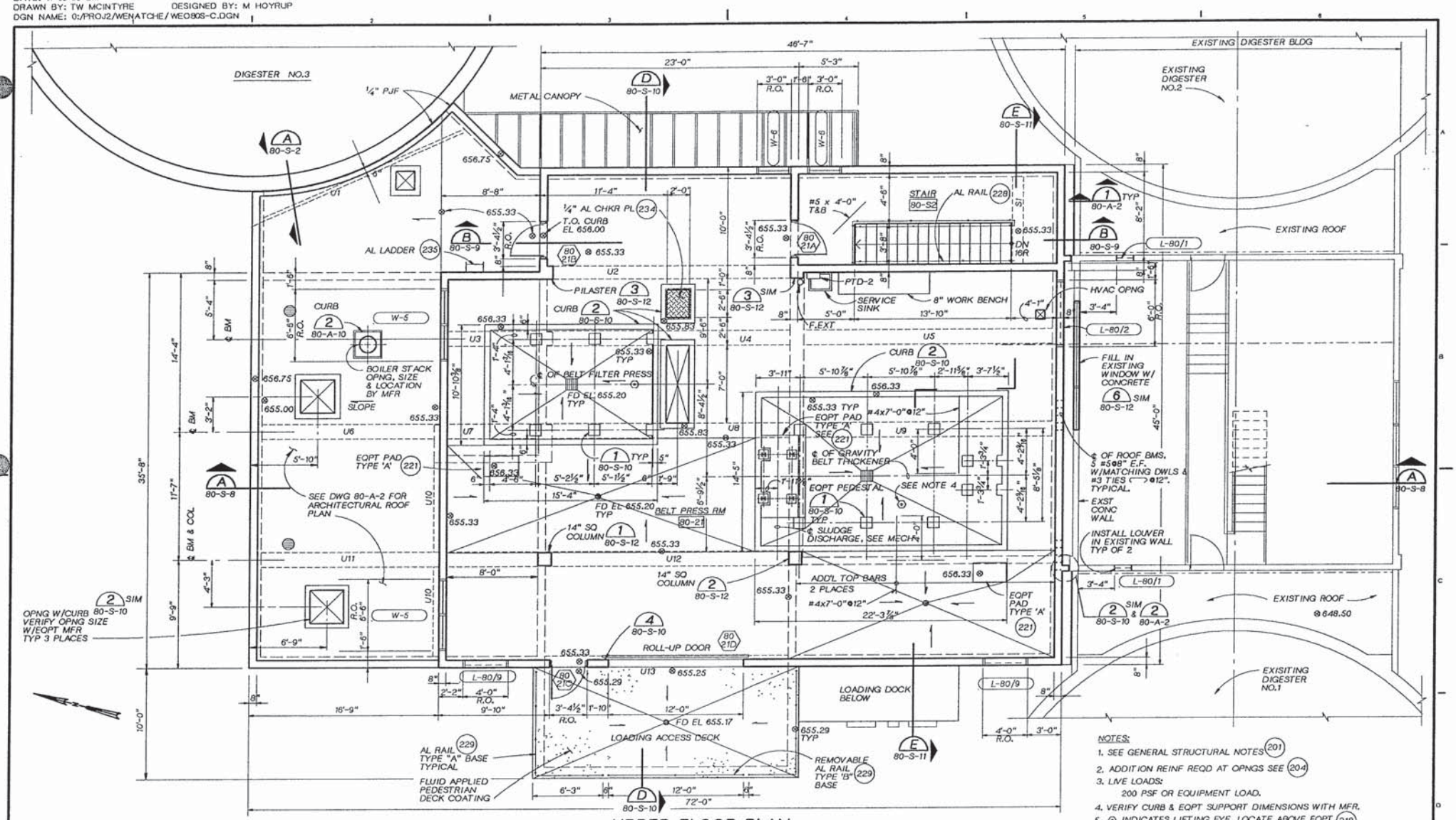

UPPER FLOOR PLAN

1/4"=1'-0"

NOTES:

1. SEE GENERAL STRUCTURAL NOTES (201)
2. ADDITION REINF REQD AT OPNGS SEE (204)
3. LIVE LOADS:
   200 PSF OR EQUIPMENT LOAD.
4. VERIFY CURB & EQPT SUPPORT DIMENSIONS WITH MFR.
5. ⊙ INDICATES LIFTING EYE. LOCATE ABOVE EQPT. (218)
6. BEAMS S1 & U1 THRU U13 SEE SCHEDULE, 80-S-13.
7. SEE MECH FOR PIPE PENETRATIONS.

MONS L. HOYRUP — STATE OF WASHINGTON — PROFESSIONAL ENGINEER

CH2M HILL

DSGN	ML HOYRUP
DR	TW MCINTYRE
CHK	L KORBUS
APVD	K HOOD

NO.	DATE	REVISION	BY	APVD

REUSE OF DOCUMENTS

THIS DOCUMENT, AND THE IDEAS AND DESIGNS INCORPORATED HEREIN, AS AN INSTRUMENT OF PROFESSIONAL SERVICE, IS THE PROPERTY OF CH2M HILL AND IS NOT TO BE USED, IN WHOLE OR IN PART, FOR ANY OTHER PROJECT WITHOUT THE WRITTEN AUTHORIZATION OF CH2M HILL.

©CH2M HILL

BAR IS ONE INCH ON ORIGINAL DRAWING. 0 1"
IF NOT ONE INCH ON THIS SHEET, ADJUST SCALES ACCORDINGLY.

CITY OF WENATCHEE, WASHINGTON
WASTEWATER TREATMENT PLANT IMPROVEMENTS

SOLIDS HANDLING FACILITY
STRUCTURAL/ ARCHITECTURAL
UPPER LEVEL FLOOR PLAN

DWG NO. 80-S-6
DATE NOV. 1990
PROJ NO. SEA24579.N1

DATE: 11-05-90 DM
DRAWN BY: BB LAZARO DESIGNED BY: M HOYRUP
DGN NAME: 0:/PROJ2/WENATCHE/WE080S-D.DGN

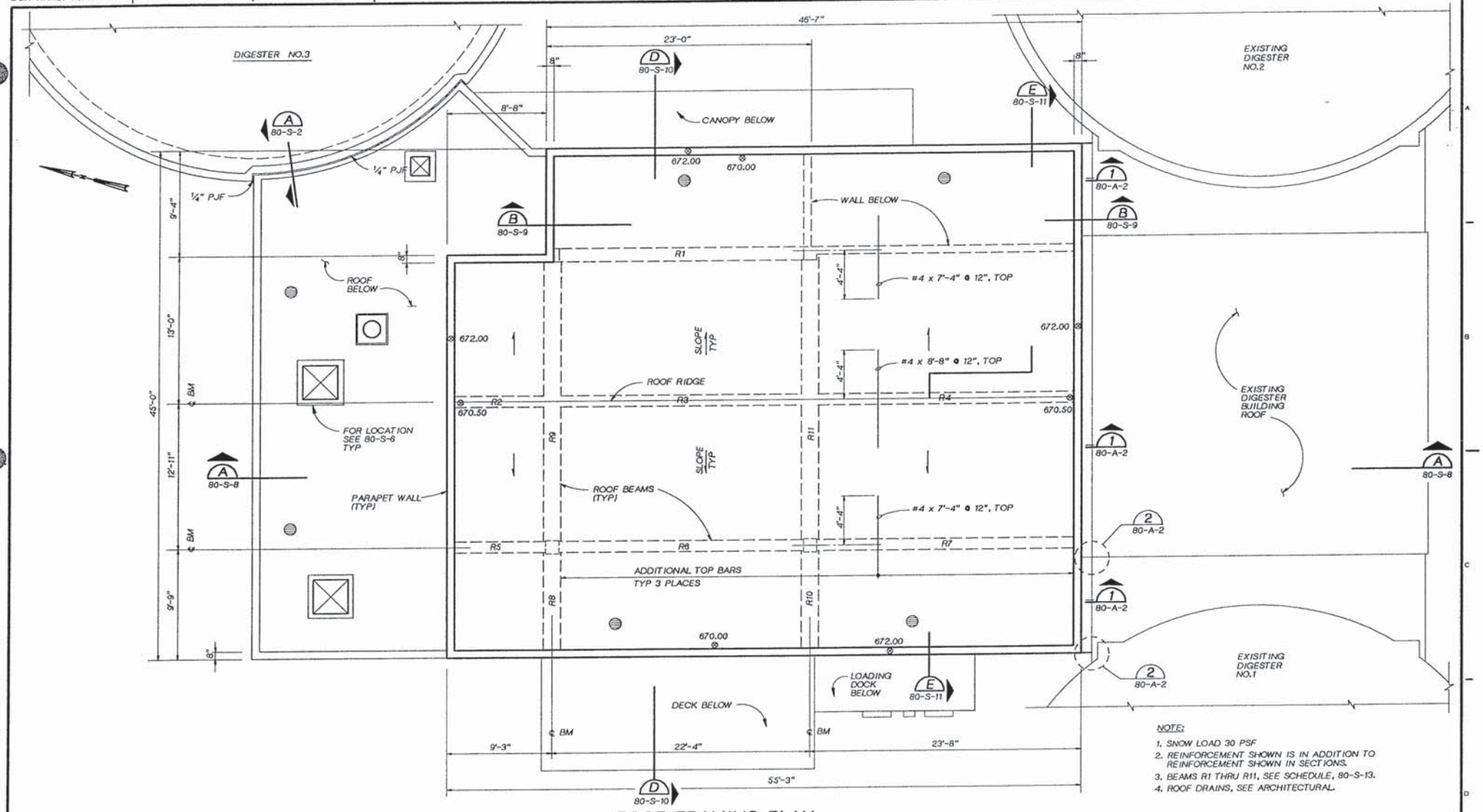

NOTE:

1. SNOW LOAD 30 PSF
2. REINFORCEMENT SHOWN IS IN ADDITION TO REINFORCEMENT SHOWN IN SECTIONS.
3. BEAMS R1 THRU R11, SEE SCHEDULE, 80-S-13.
4. ROOF DRAINS, SEE ARCHITECTURAL.

ROOF FRAMING PLAN

1/4"=1'-0"

MONS L. HOYRUP — STATE OF WASHINGTON — PROFESSIONAL ENGINEER

CH2M HILL

DSGN	ML HOYRUP
DR	BB LAZARO
CHK	L KORBUS
APVD	K HOOD

NO.	DATE	REVISION	BY	APVD

REUSE OF DOCUMENTS

THIS DOCUMENT, AND THE IDEAS AND DESIGNS INCORPORATED HEREIN, AS AN INSTRUMENT OF PROFESSIONAL SERVICE, IS THE PROPERTY OF CH2M HILL AND IS NOT TO BE USED, IN WHOLE OR IN PART, FOR ANY OTHER PROJECT WITHOUT THE WRITTEN AUTHORIZATION OF CH2M HILL.

©CH2M HILL

SCALE: BAR IS ONE INCH ON ORIGINAL DRAWING. 0 — 1" IF NOT ONE INCH ON THIS SHEET, ADJUST SCALES ACCORDINGLY.

CITY OF WENATCHEE, WASHINGTON
WASTEWATER TREATMENT PLANT IMPROVEMENTS

SOLIDS HANDLING FACILITY
STRUCTURAL
ROOF FRAMING PLAN

DWG NO. 80-S-7
DATE NOV. 1990
PROJ NO. SEA24579.N1

DATE: 11-05-90 DM
DRAWN BY: TW MCINTYRE DESIGNED BY: J HANSEN
DGN NAME: 0:/PROJ2/WENATCHE/ WE080S-G.DGN

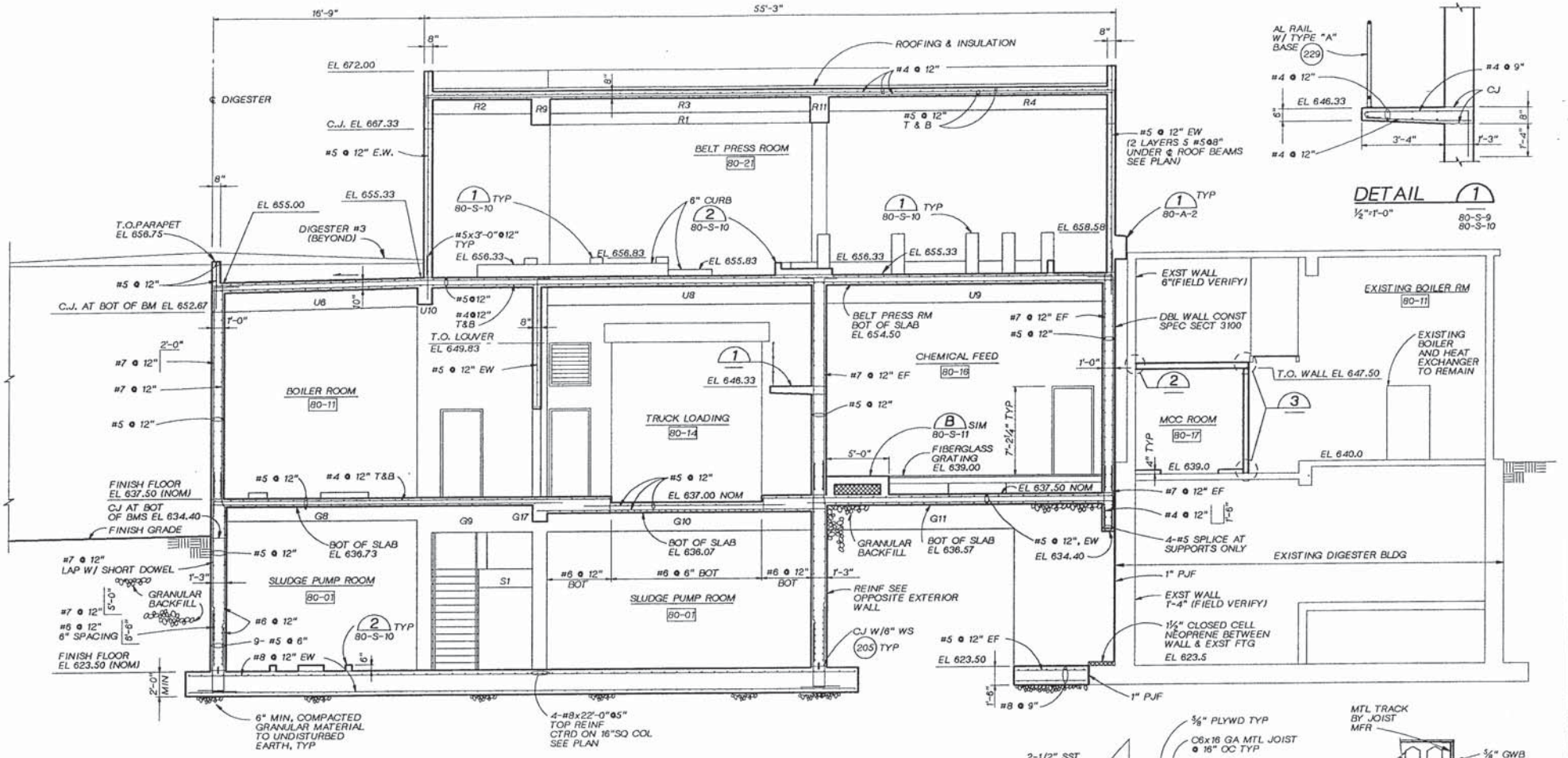

MONS L. HOYRUP
STATE OF WASHINGTON
PROFESSIONAL ENGINEER

CH2M HILL

DSGN	ML HOYRUP
DR	TW MCINTYRE
CHK	L KORBUS
APVD	K HOOD

NO.	DATE	REVISION	BY	APVD

REUSE OF DOCUMENTS
THIS DOCUMENT, AND THE IDEAS AND DESIGNS INCORPORATED HEREIN, AS AN INSTRUMENT OF PROFESSIONAL SERVICE, IS THE PROPERTY OF CH2M HILL AND IS NOT TO BE USED, IN WHOLE OR IN PART, FOR ANY OTHER PROJECT WITHOUT THE WRITTEN AUTHORIZATION OF CH2M HILL.
©CH2M HILL

BAR IS ONE INCH ON ORIGINAL DRAWING. 0 1"
IF NOT ONE INCH ON THIS SHEET, ADJUST SCALES ACCORDINGLY.

CITY OF WENATCHEE, WASHINGTON
WASTEWATER TREATMENT PLANT IMPROVEMENTS

SOLIDS HANDLING FACILITY
STRUCTURAL SECTION

DWG NO. 80-S-8
DATE NOV. 1990
PROJ NO. SEA24579.N1

DATE: 11-05-90 DM
DRAWN BY: TW MCINTYRE DESIGNED BY: ML HOYRUP
DGN NAME: 0:/PROJ2/WENATCHE/ WE0905-H.DGN

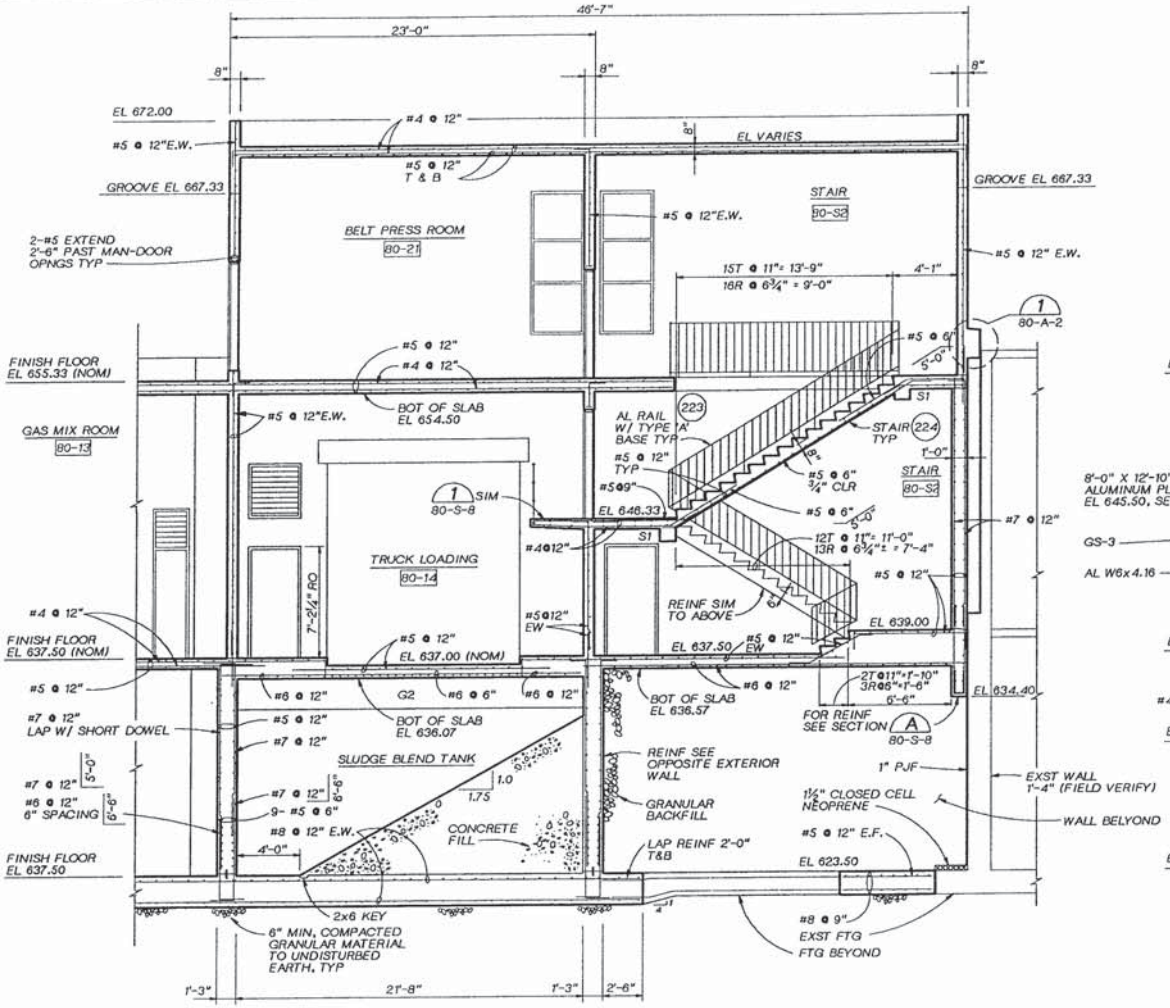

SECTION B
¼"=1'-0"
80-S-4
80-S-5
80-S-6
80-S-7

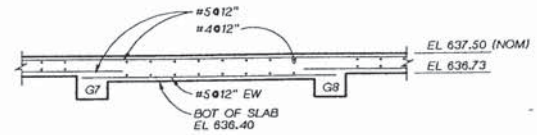

SECTION A
⅜"=1'-0"
80-S-5

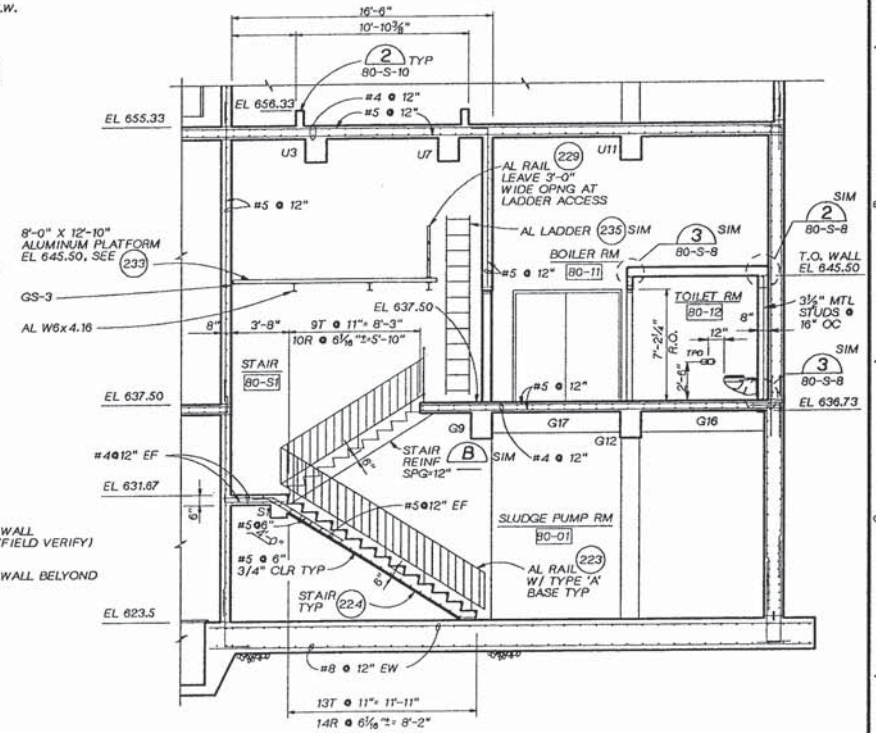

SECTION C
¼"=1'-0"
80-S-4
80-S-5

DSGN ML HOYRUP					
DR TW MCINTYRE					
CHK L KORBUS					
APVD K HOOD	NO.	DATE	REVISION	BY	APVD

CH2M HILL

REUSE OF DOCUMENTS
THIS DOCUMENT, AND THE IDEAS AND DESIGNS INCORPORATED HEREIN, AS AN INSTRUMENT OF PROFESSIONAL SERVICE, IS THE PROPERTY OF CH2M HILL AND IS NOT TO BE USED, IN WHOLE OR IN PART, FOR ANY OTHER PROJECT WITHOUT THE WRITTEN AUTHORIZATION OF CH2M HILL.
©CH2M HILL

BAR IS ONE INCH ON ORIGINAL DRAWING. 0 1"
IF NOT ONE INCH ON THIS SHEET, ADJUST SCALES ACCORDINGLY.

CITY OF WENATCHEE, WASHINGTON
WASTEWATER TREATMENT PLANT IMPROVEMENTS

SOLIDS HANDLING FACILITY
STRUCTURAL SECTIONS

DWG NO. 80-S-9
DATE NOV. 1990
PROJ NO. SEA24579.N1

DATE: 11-05-90 DM
DRAWN BY: TW MCINTYRE DESIGNED BY: M HOYRUP
DGN NAME: O:/PROJ2/WENATCHE/ WE080S-1.DGN

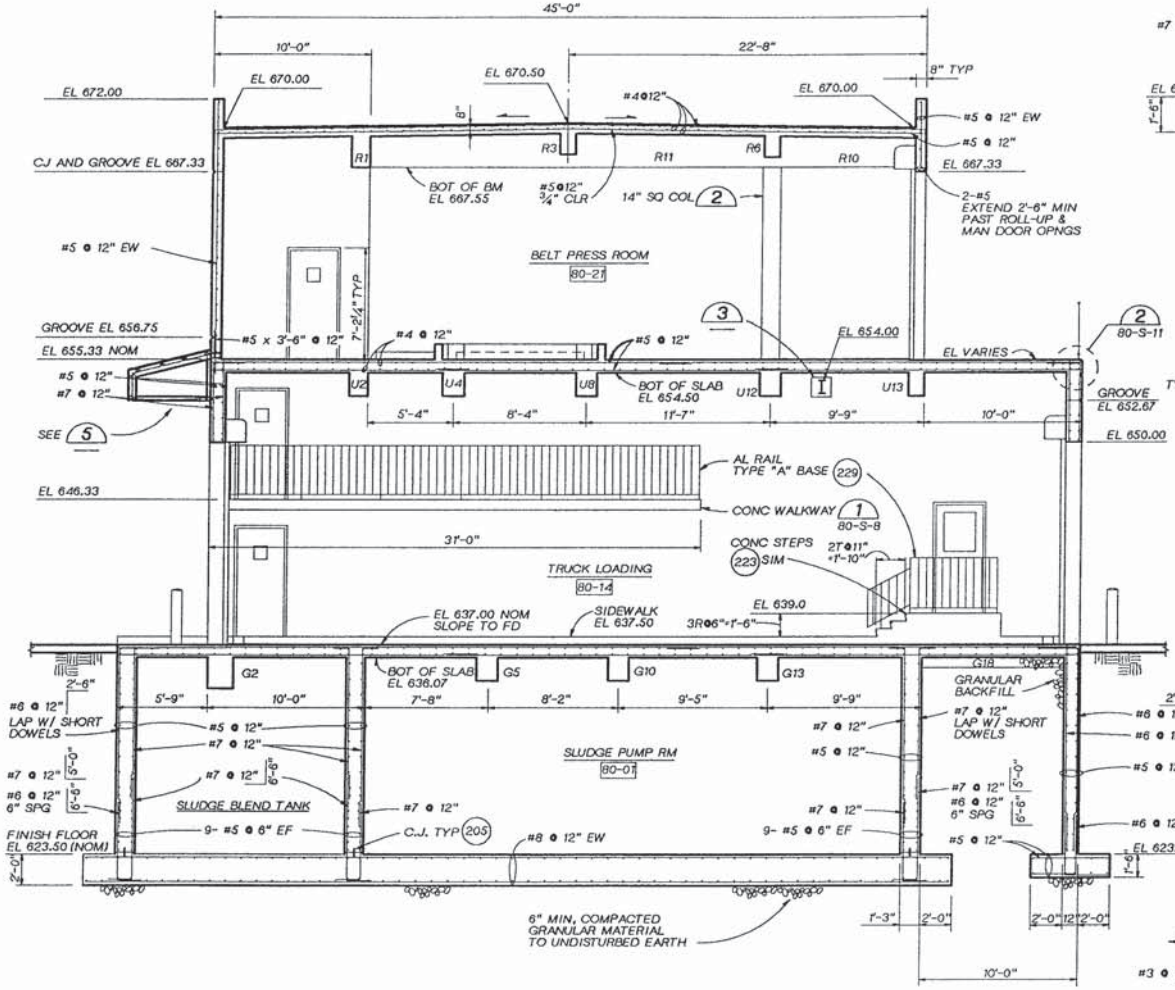

SECTION D
¼"=1'-0" 80-S-4 80-S-5 80-S-6 80-S-7

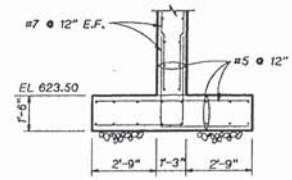

SECTION A
⅜"=1'-0" 80-S-4

NOTE:
* VERIFY W/ EQUIPMENT MANUFACTURE

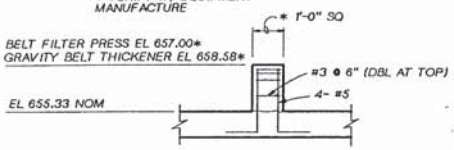

SECTION

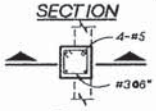

PLAN

DETAIL 1
NTS 80-S-6 80-S-8

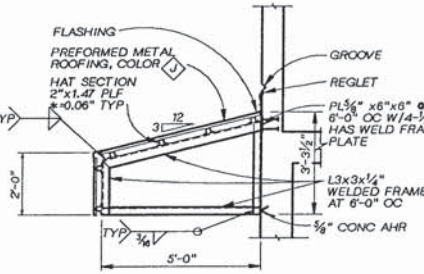

CANOPY DETAIL 5
½"=1'-0"

NOTE: FINISH ALL EXPOSED METAL FRAMING WITH PS-107, COLOR J

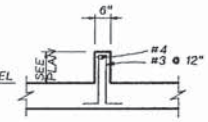

DETAIL 2
NTS 80-S-4 80-S-6 80-S-8 80-S-9 80-S-5

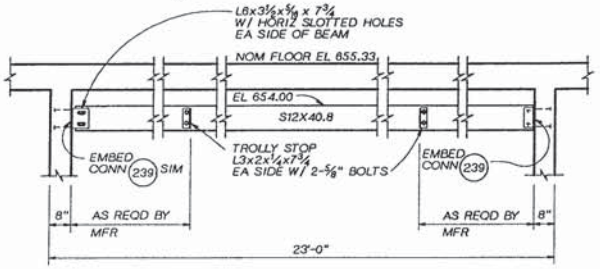

MONORAIL BEAM 3
½"=1'-0" 80-S-5 80-S-10

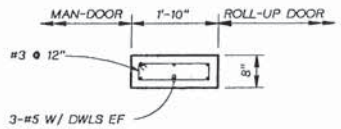

DETAIL 4
¾" = 1'-0" 80-S-6

MONS L. HOYRUP
STATE OF WASHINGTON
REGISTERED PROFESSIONAL ENGINEER

CH2M HILL

DSGN	M HOYRUP
DR	TW MCINTYRE
CHK	L KORBUS
APVD	K HOOD

NO.	DATE	REVISION	BY	APVD

REUSE OF DOCUMENTS
THIS DOCUMENT, AND THE IDEAS AND DESIGNS INCORPORATED HEREIN, AS AN INSTRUMENT OF PROFESSIONAL SERVICE, IS THE PROPERTY OF CH2M HILL AND IS NOT TO BE USED, IN WHOLE OR IN PART, FOR ANY OTHER PROJECT WITHOUT THE WRITTEN AUTHORIZATION OF CH2M HILL.
©CH2M HILL

BAR IS ONE INCH ON ORIGINAL DRAWING.
0 1"
IF NOT ONE INCH ON THIS SHEET, ADJUST SCALES ACCORDINGLY.

CITY OF WENATCHEE, WASHINGTON
WASTEWATER TREATMENT PLANT IMPROVEMENTS

SOLIDS HANDLING FACILITY
STRUCTURAL SECTIONS

OWG NO. 80-S-10
DATE NOV. 1990
PROJ NO. SEA24579.N1

DATE: 11-06-90 DM
DRAWN BY: TW MCINTYRE DESIGNED BY: M HOYRUP
DGN NAME: 0:/PROJ2/WENATCHE/WE080S-J.DGN

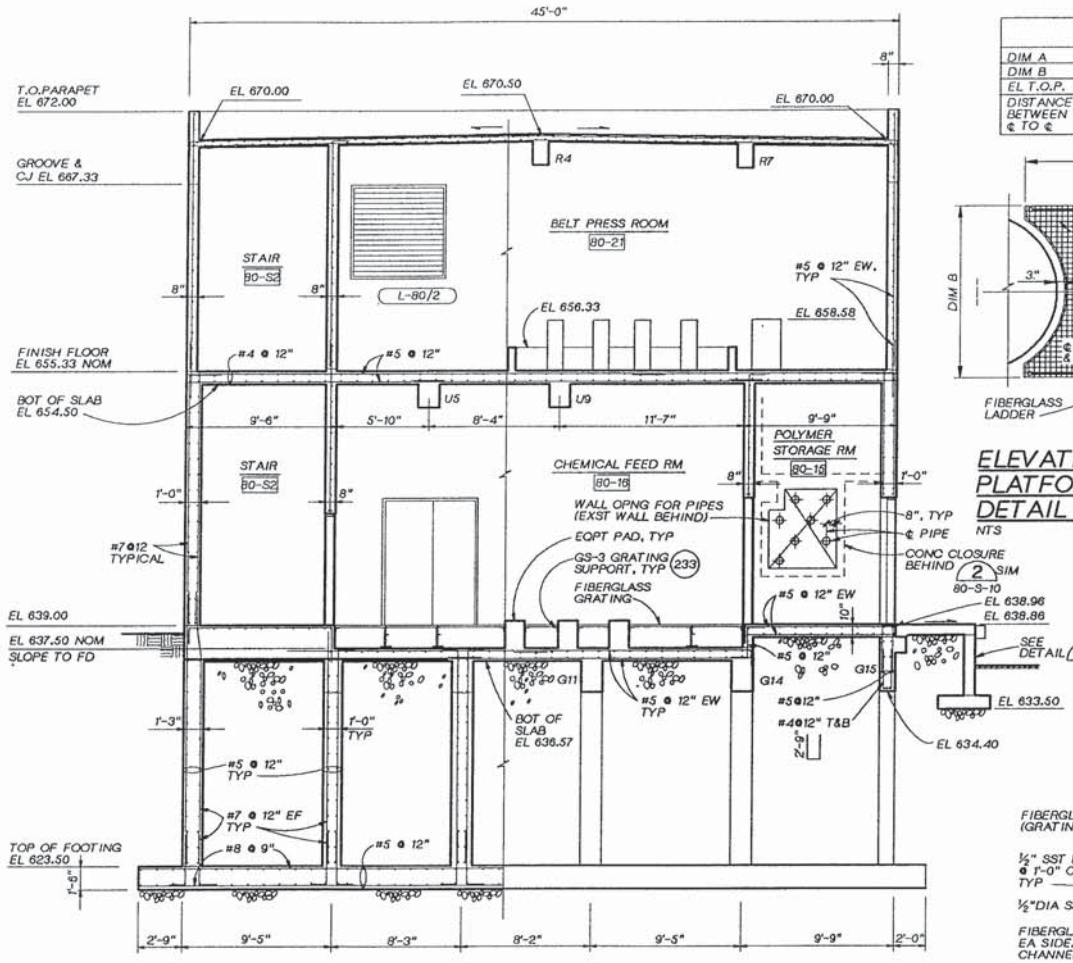

SECTION E
1/4"=1'-0" 80-S-4 80-S-5 80-S-6 80-S-7

	PLATFORM NO. 1	NO. 2
DIM A	6'-6"	6'-0"
DIM B	4'-0"	5'-6"
EL T.O.P.	641.0	643.0
DISTANCE BETWEEN TANKS ℄ TO ℄	7'-6"	9'-0"

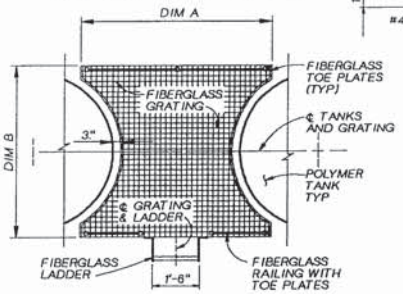

ELEVATED FIBERGLASS PLATFORMS NO. 1 & NO. 2
DETAIL 1
NTS 80-M-5 80-M-12

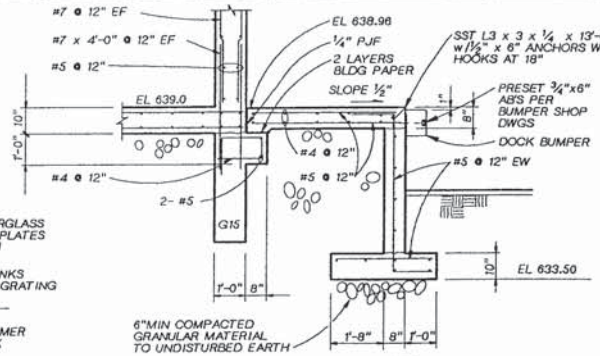

SECTION A
1/2"=1'-0" 80-S-5

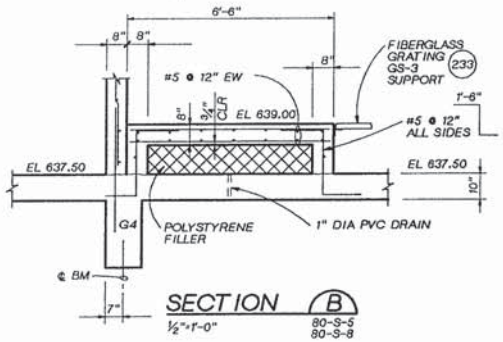

SECTION B
1/2"=1'-0" 80-S-5 80-S-8

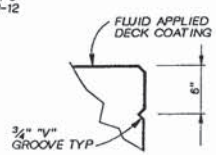

DETAIL 2
1 1/2"=1'-0" 80-S-5

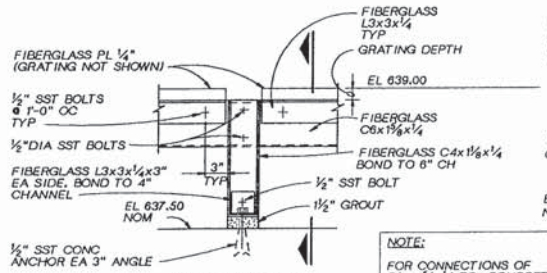

ELEVATION

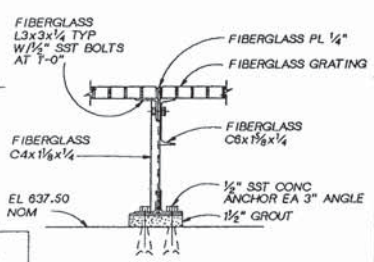

SECTION

NOTE:
FOR CONNECTIONS OF C6x 1 5/8x1/4 TO CONCRETE SEE 233 GS-4

DETAIL 1
1 1/2"=1'-0" 80-S-5

MONS L. HOYRUP
STATE OF WASHINGTON
REGISTERED PROFESSIONAL ENGINEER

CH2M HILL

DSGN	M HOYRUP
DR	TW MCINTYRE
CHK	L KORBUS
APVD	K HOOD

NO.	DATE	REVISION	BY	APVD

REUSE OF DOCUMENTS
THIS DOCUMENT, AND THE IDEAS AND DESIGNS INCORPORATED HEREIN, AS AN INSTRUMENT OF PROFESSIONAL SERVICE, IS THE PROPERTY OF CH2M HILL AND IS NOT TO BE USED, IN WHOLE OR IN PART, FOR ANY OTHER PROJECT WITHOUT THE WRITTEN AUTHORIZATION OF CH2M HILL.
©CH2M HILL

BAR IS ONE INCH ON ORIGINAL DRAWING.
0 1"
IF NOT ONE INCH ON THIS SHEET, ADJUST SCALES ACCORDINGLY.

CITY OF WENATCHEE, WASHINGTON
WASTEWATER TREATMENT PLANT IMPROVEMENTS

SOLIDS HANDLING FACILITY
STRUCTURAL SECTIONS

DWG NO. 80-S-11
DATE NOV. 1990
PROJ. NO. SEA24579.N1

DATE: 11-06-90
DRAWN BY: TW MCINTYRE DESIGNED BY: ML HOYRUP
DGN NAME: 0:/PROJ2/WENATCHE/ WE080S-L.DGN

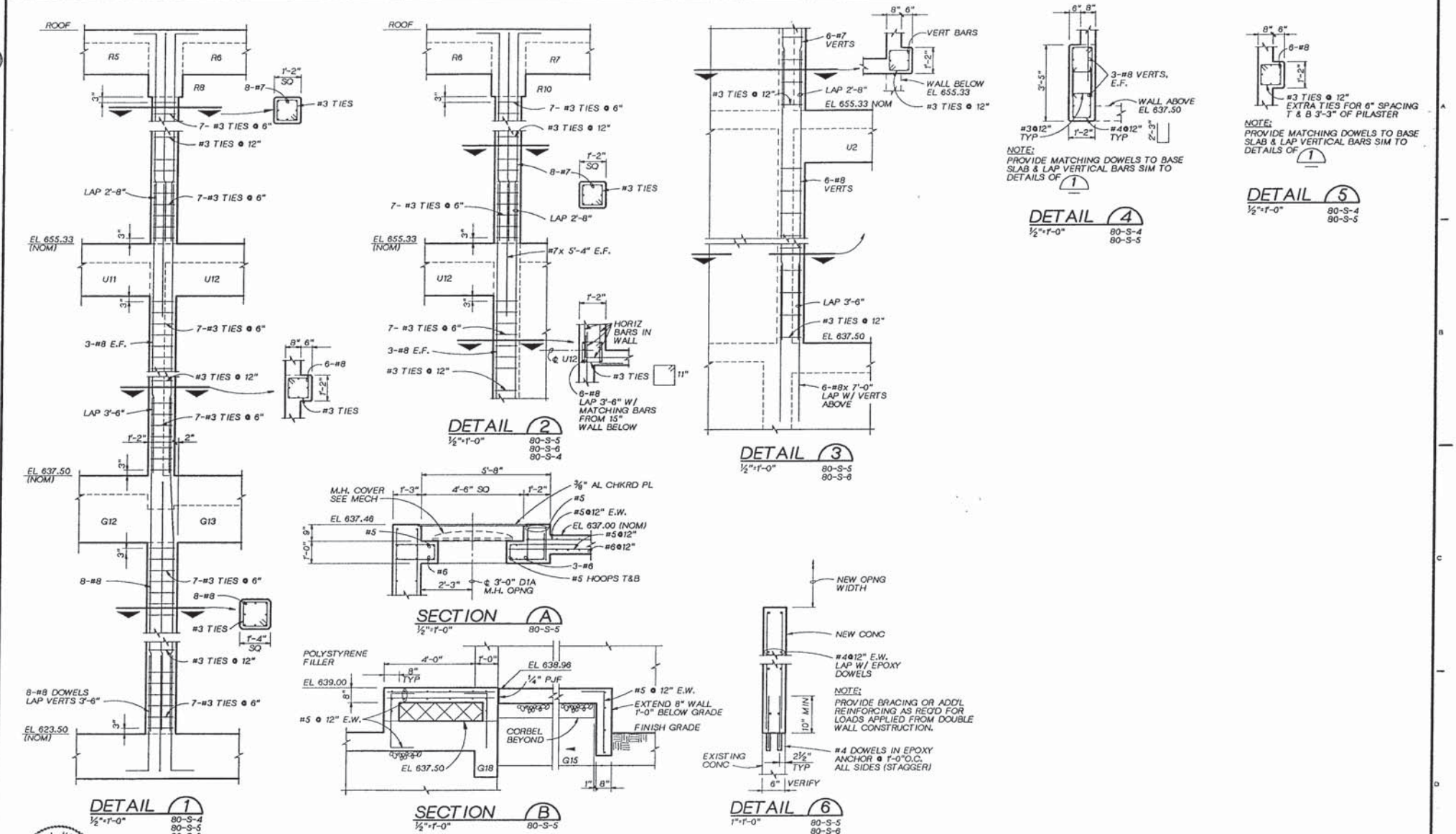

DSGN ML HOYRUP
DR TW MCINTYRE
CHK L KORBUS
APVD K HOOD

CH2M HILL

NO.	DATE	REVISION	BY	APVD

REUSE OF DOCUMENTS
THIS DOCUMENT, AND THE IDEAS AND DESIGNS INCORPORATED HEREIN, AS AN INSTRUMENT OF PROFESSIONAL SERVICE, IS THE PROPERTY OF CH2M HILL AND IS NOT TO BE USED, IN WHOLE OR IN PART, FOR ANY OTHER PROJECT WITHOUT THE WRITTEN AUTHORIZATION OF CH2M HILL.
©CH2M HILL

BAR IS ONE INCH ON ORIGINAL DRAWING. 0 1"
IF NOT ONE INCH ON THIS SHEET, ADJUST SCALES ACCORDINGLY.

CITY OF WENATCHEE, WASHINGTON
WASTEWATER TREATMENT PLANT IMPROVEMENTS

SOLIDS HANDLING FACILITY
STRUCTURAL SECTIONS AND DETAILS

DWG NO. 80-S-12
DATE NOV. 1990
PROJ NO. SEA24579.N1

DATE: 11-06-90 am
DRAWN BY: TW MCINTYRE DESIGNED BY: ML HOYRUP
DGN NAME: 0:/PROJ2/WENATCHE/ WE080S-M.DGN

BEAM SCHEDULE (222)

*1 = RUN T BARS 7'-6" AND TC BARS 6'-0" HORIZ INTO SUPPORTS.
*2 = BEND DOWN AT EDGE OF CONCRETE SIDEWALK.
3. BAR SPG BASED ON 1" (MAX SIZE) AGGREGATE.

BEAM NO. (SEE PLANS)	SIZE		TOP REINF AT LEFT SUPPORT		BOTTOM REINF		* TOP REINF AT RIGHT SUPPORT		SHEAR REINF		REMARKS
	W	D	T	TC	B	BC	T	TC	NO. SIZE	SPACING FROM LEFT SUPPORT	
S1	12"	20"		3-#5		3-#5		3-#5	3	9" O.C. MAX	STAIR LANDING
G2	15"	36" MIN	*1 3-#9	3-#8		6-#8	*1 3-#9	*1 3-#8	4	9@6", 12" MAX, 9@6"	BC BARS IN 2 LAYERS W/1" BETWEEN (4 BC BARS IN BOT LAYER)
G3	16"	22"		2-#5		7-#8		2-#5	4	11@6", 12" MAX, 11@6"	BC BARS IN 2 LAYERS W/1" BETWEEN (5 BC BARS IN BOT LAYER)
G4	14"	36"	*2 2-#8	*2 2-#8		4-#8	*1 2-#8	*1 2-#8	4	12" MAX	
G5	16"	30" MIN		3-#8	4-#8	5-#8	2-#8	3-#8	4	12" MAX, 7@6"	2 LAYERS BOT. BARS W/ 1" BTWN
G6	16"	36"	*2 2-#8	*2 3-#8		4-#8	*1 2-#8	*1 3-#8	4	12" MAX	
G7	16"	22"		3-#5		4-#8		3-#5	4	7@6", 12" MAX, 7@6"	
G8	16"	22"		3-#8		5-#8		3-#8	4	12" MAX	
G9	16"	36"		3-#8	2-#8			4-#8	4	12" MAX	
G10	16"	30" MIN		4-#8	2-#8	4-#8	2-#8	3-#8	4	12" MAX, 5@6"	1 BC BAR 1" CLEAR ABOVE BOT BARS
G11	16"	36"	*2 2-#8	*2 3-#8		3-#8	*1 2-#8	*1 3-#8	4	12" MAX	
G12	18"	36"		3-#8	3-#8	2-#8	3-#8		4	12" MAX	
G13	18"	30" MIN	3-#8	3-#8	3-#8	2-#8	2-#8	3-#8	4	12" MAX	
G14	18"	36"	*2 2-#8	*2 3-#8	3-#8	2-#8	*1 2-#8	*1 3-#8	4	12" MAX	
G15	12"	55"		2-#8		3-#8		*1 2-#8	4	12" MAX	SEE SECTION SHEET 80-S-11
G16	14"	24"		4-#5		4-#5		4-#5	3	3@6", 12" MAX, 6@6"	
G17	14"	24"		4-#5		4-#5		4-#5	3	8@6", 12" MAX, 5@6"	
G18	12"	24"		4-#5		4-#5		4-#5	3	12" MAX	
U1	14"	24"		3-#5		5-#7		3-#5	4	9@6", 12" MAX, 9@6"	PLACE 1ST & LAST TIE @ ℄ BM & WALL FACE INTERSECTIONS
U2	14"	28"		3-#5	4-#8	4-#8		3-#5	4	12" MAX	2 LAYERS BOT. BARS W/ 1" BTWN
U3	16"	28"		2-#5		2-#8		2-#8	4	12" MAX	
U4	16"	28"		2-#8		3-#8	3-#8	2-#8	4	12" MAX	
U5	16"	28"	3-#8	2-#8	3-#8	2-#8		2-#8	4	12" MAX	
U6	18"	28"		3-#8		2-#8		3-#8	4	12" MAX	
U7	18"	28"		3-#8		2-#8		3-#8	4	12" MAX	
U8	18"	28"	1-#8	3-#8	2-#9	2-#8	3-#8	3-#8	4	12" MAX	
U9	18"	28"	3-#8	3-#8	2-#9	2-#9		3-#8	4	12" MAX	
U10	14"	26"		3-#5	4-#8	4-#8		3-#5	4	8@6", 12" MAX, 8@6"	2 LAYERS BOT. BARS W/ 1" BTWN
U11	18"	28"		3-#8	2-#9	2-#8	3-#8	3-#8	4	12" MAX	
U12	18"	28"	3-#8	3-#8	2-#9	2-#8		3-#8	4	12" MAX	
U13	12"	28"	*1 1-#9	*1 2-#9		3-#8	*1 1-#9	*1 2-#9	3	12" MAX	
R1	14"	32"		2-#6	2-#7	3-#7		2-#6	3	12" MAX	1 BC BAR 1" CLEAR ABOVE BOT BARS
R2	12"	24"		2-#8		2-#8		2-#8	4	12" MAX	
R3	12"	24"		2-#8		4-#8	2-#8	2-#8	4	9@6", 12" MAX, 16@6"	
R4	12"	24"	2-#8	2-#8		4-#8		2-#8	4	19@6", 12" MAX, 10@6"	
R5	12"	24"		2-#8		4-#8		2-#8	4	12" MAX	
R6	12"	24"		2-#8		4-#8	2-#8	2-#8	4	8@6", 12" MAX, 13@6"	
R7	12"	24"	2-#8	2-#8		4-#8		2-#8	4	17@6", 12" MAX, 8@6"	
R8	18"	VARIES		2-#6	3-#8	2-#8	2-#8	2-#8	4	12" MAX	BOT OF BM EL 667.55, TYP R8, R9, R10, R11
R9	18"	VARIES	2-#8	2-#8	3-#8	4-#8		2-#8	4	12" MAX	1 BC BAR SPACED 1" CLR ABOVE BOT BARS
R10	18"	VARIES		2-#6	4-#8	2-#8	2-#8	3-#8	4	12" MAX	
R11	18"	VARIES	2-#8	3-#8	4-#8	5-#8		2-#8	4	12" MAX	3 BC BARS SPACED 1" CLR ABOVE BOT BARS

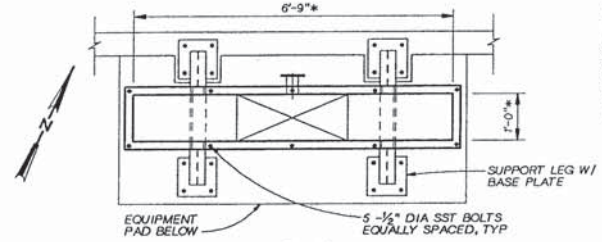

PLAN

NOTES:

1. *DIMENSION TO BE VERIFIED FOR CONFORMANCE WITH CERTIFIED DRAWINGS OF THE GRAVITY BELT THICKENER AND SLUDGE PUMP.

2. HOPPER TO BE 304 SST. SUPPORTS TO BE A36 CARBON STEEL. CONNECTING HARDWARE TO BE 316 SST.

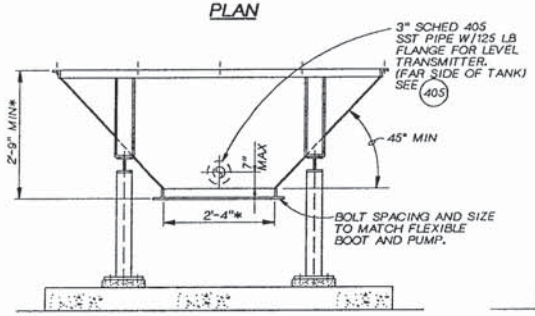

ELEVATION

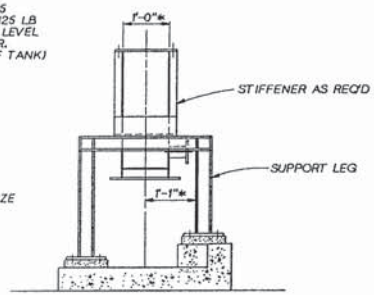

ELEVATION

THICKENED SLUDGE HOPPER (1)

NTS

80-M-6
80-M-12

MONS L. HOYRUP — STATE OF WASHINGTON — REGISTERED PROFESSIONAL ENGINEER

CH2M HILL

DSGN ML HOYRUP
DR TW MCINTYRE
CHK L KORBUS
APVD K HOOD

NO.	DATE	REVISION	BY	APVD

REUSE OF DOCUMENTS
THIS DOCUMENT, AND THE IDEAS AND DESIGNS INCORPORATED HEREIN, AS AN INSTRUMENT OF PROFESSIONAL SERVICE, IS THE PROPERTY OF CH2M HILL AND IS NOT TO BE USED, IN WHOLE OR IN PART, FOR ANY OTHER PROJECT WITHOUT THE WRITTEN AUTHORIZATION OF CH2M HILL.
©CH2M HILL

BAR IS ONE INCH ON ORIGINAL DRAWING. 0 1"
IF NOT ONE INCH ON THIS SHEET, ADJUST SCALES ACCORDINGLY.

CITY OF WENATCHEE, WASHINGTON
WASTEWATER TREATMENT PLANT IMPROVEMENTS

SOLIDS HANDLING FACILITY
STRUCTURAL SECTIONS AND DETAILS

DWG NO. 80-S-13
DATE NOV. 1990
PROJ. NO. SEA24579.N1

DATE: 11-04-90 KJR
DRAWN BY: DL CHRISINGER DESIGNED BY: SB HILDRETH
DGN NAME: O:/PROJ2/WENATCHE/ WE080M-A.DGN

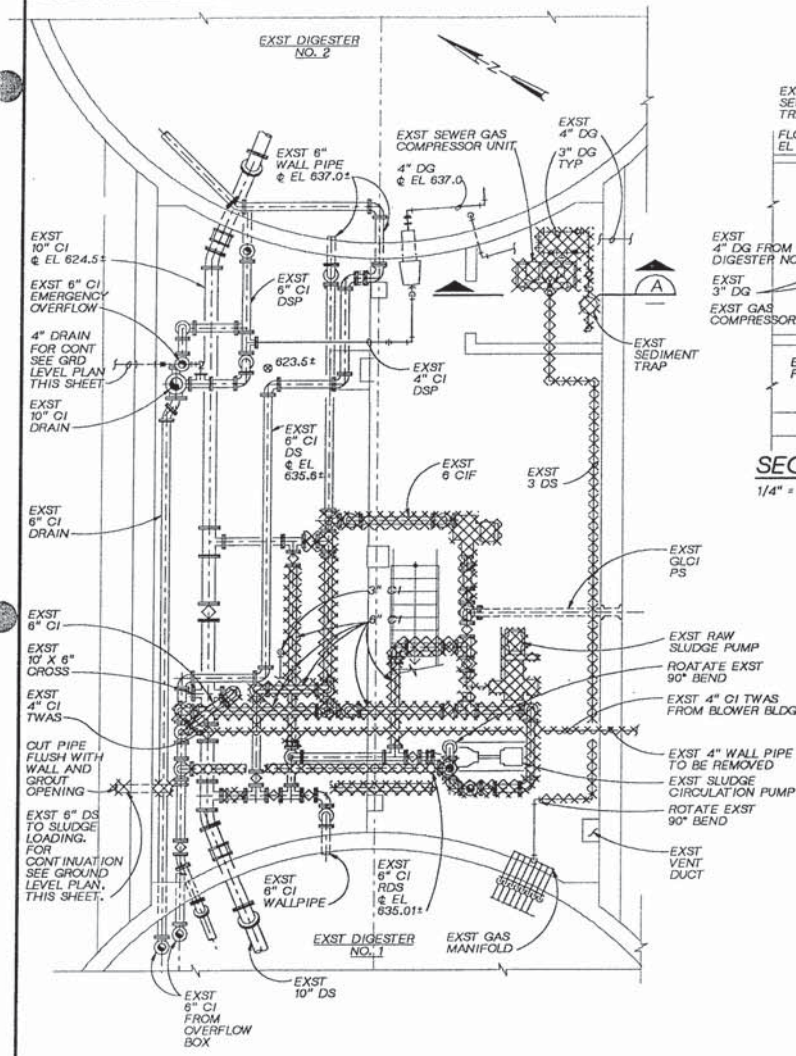

LOWER LEVEL

PLAN

1/4" = 1'-0"

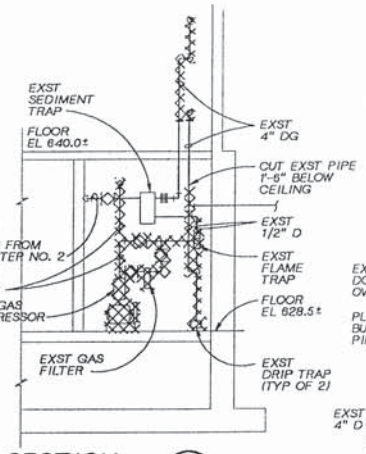

SECTION A

1/4" = 1'-0"

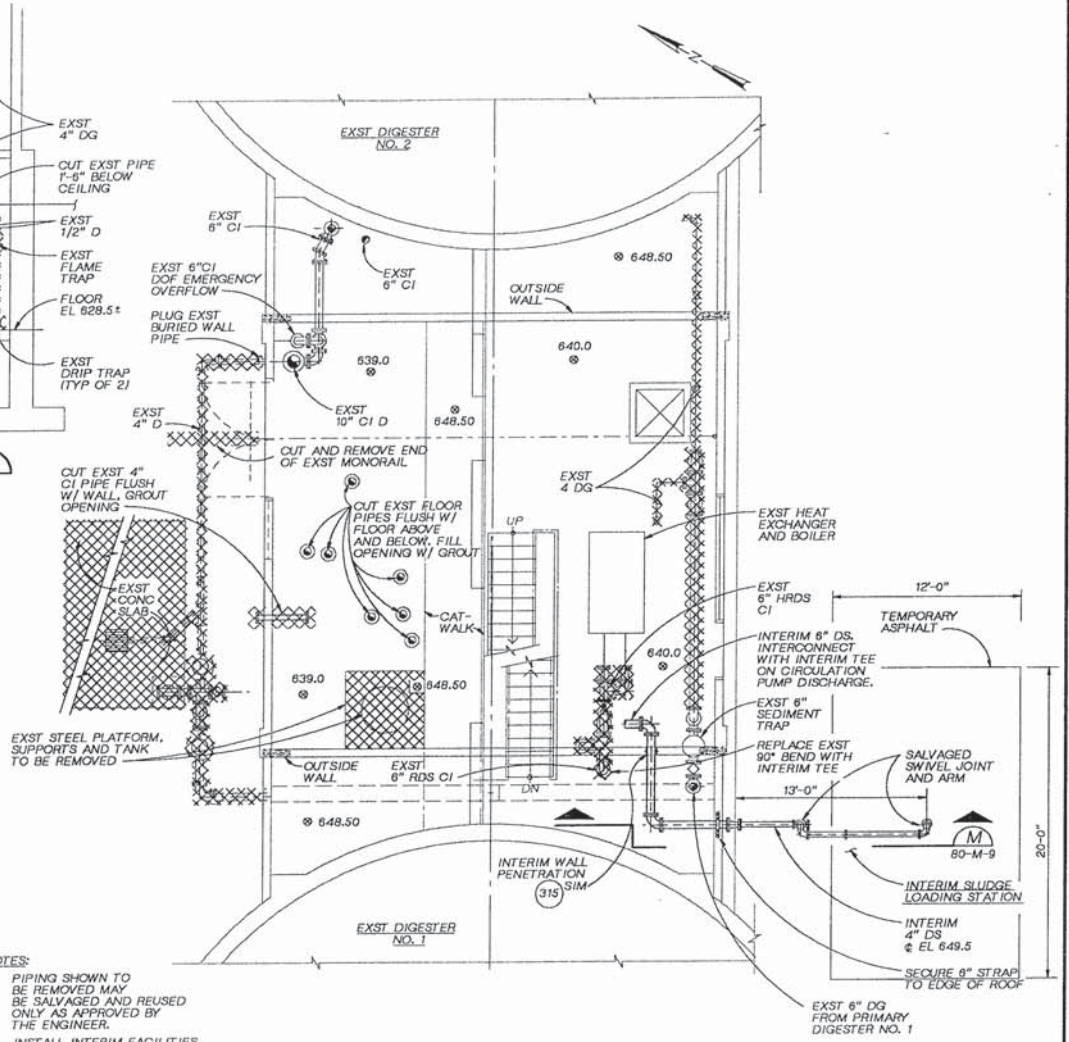

NOTES:

1. PIPING SHOWN TO BE REMOVED MAY BE SALVAGED AND REUSED ONLY AS APPROVED BY THE ENGINEER.
2. INSTALL INTERIM FACILITIES UPON REMOVAL OF EXISTING SLUDGE LOADING STATION. REMOVE AND CLOSE WALL PENETRATION UPON SUCCESSFUL START-UP OF NEW SLUDGE LOADING FACILITY.

PLAN ABOVE EL 648.50

1/4" = 1'-0"

NOTE:
LOCATIONS OF EXISTING PIPING AND STRUCTURES ARE APPROXIMATE AND MUST BE FIELD VERIFIED.

KAREN A. HOOD — STATE OF WASHINGTON — 23411 — REGISTERED PROFESSIONAL ENGINEER

CH2M HILL

DSGN	S HILDRETH
DR	D CHRISINGER
CHK	R STAEHLIN
APVD	K HOOD

NO.	DATE	REVISION	BY	APVD

REUSE OF DOCUMENTS
THIS DOCUMENT, AND THE IDEAS AND DESIGNS INCORPORATED HEREIN, AS AN INSTRUMENT OF PROFESSIONAL SERVICE, IS THE PROPERTY OF CH2M HILL AND IS NOT TO BE USED, IN WHOLE OR IN PART, FOR ANY OTHER PROJECT WITHOUT THE WRITTEN AUTHORIZATION OF CH2M HILL.
©CH2M HILL

BAR IS ONE INCH ON ORIGINAL DRAWING. 0 1"
IF NOT ONE INCH ON THIS SHEET, ADJUST SCALES ACCORDINGLY.

CITY OF WENATCHEE, WASHINGTON
WASTEWATER TREATMENT PLANT IMPROVEMENTS

SOLIDS HANDLING FACILITY

DEMOLITION AND INTERIM SLUDGE LOADING STATION

DWG NO. 80-M-1
DATE NOV. 1990
PROJ NO. SEA24579.N1

DATE: 11-08-90 CJB
DRAWN BY: E.RONSHAUGEN DESIGNED BY: S.D.HILDRETH
DGN NAME: O:/PROJ2/WENATCHE/WE080M-E.DGN

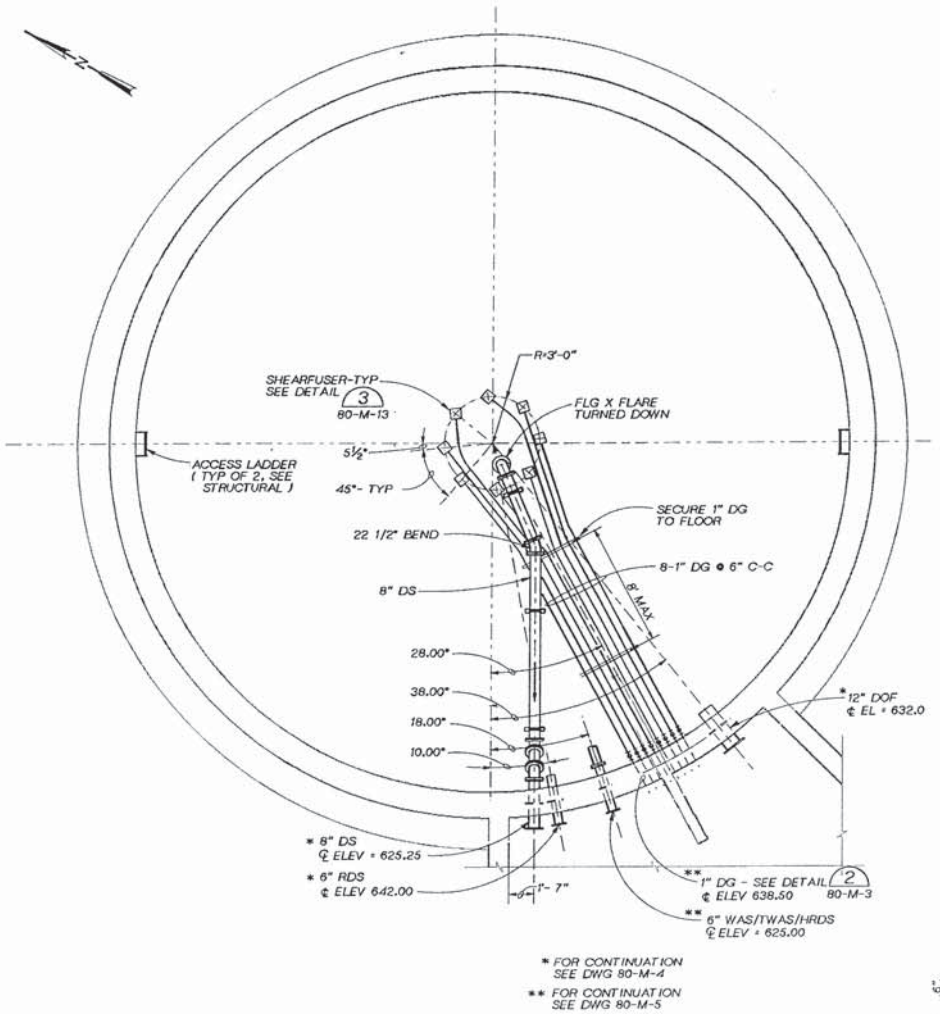

COMPOSITE PLAN
¼" = 1'-0"

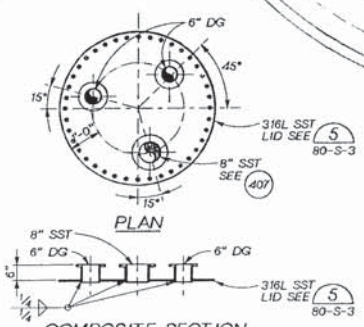

COMPOSITE SECTION
GAS BONNET LID

DETAIL 1
NTS

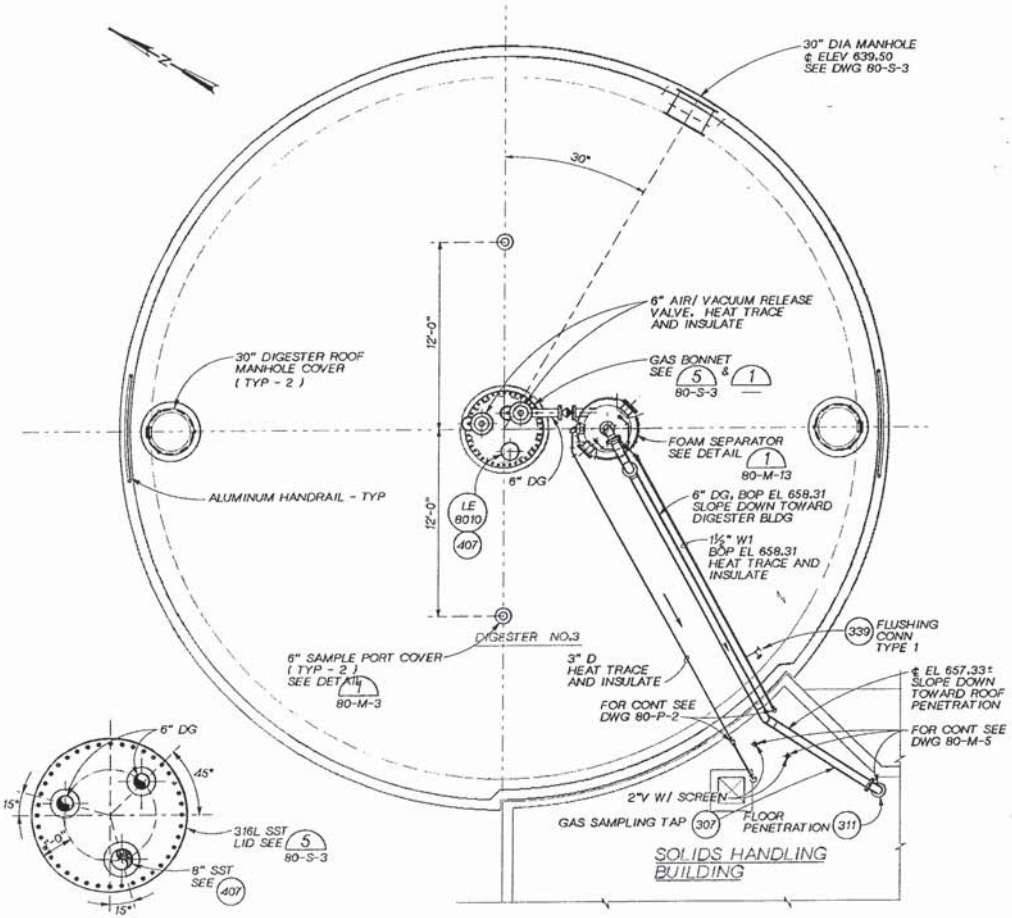

ROOF PLAN
¼" = 1'-0"

DSGN S.HILDRETH							
DR E.RONSHAUGEN							
CHK R. STAEHLIN							
APVD K. HOOD	NO.	DATE	REVISION	BY	APVD		
L. ARAGON							

CH2M HILL

REUSE OF DOCUMENTS
THIS DOCUMENT, AND THE IDEAS AND DESIGNS INCORPORATED HEREIN, AS AN INSTRUMENT OF PROFESSIONAL SERVICE, IS THE PROPERTY OF CH2M HILL AND IS NOT TO BE USED, IN WHOLE OR IN PART, FOR ANY OTHER PROJECT WITHOUT THE WRITTEN AUTHORIZATION OF CH2M HILL.
©CH2M HILL

VERIFY SCALE
BAR IS ONE INCH ON ORIGINAL DRAWING.
0 1"
IF NOT ONE INCH ON THIS SHEET, ADJUST SCALES ACCORDINGLY.

CITY OF WENATCHEE, WASHINGTON
WASTEWATER TREATMENT PLANT IMPROVEMENTS

SOLIDS HANDLING FACILITY
ANAEROBIC DIGESTER MECHANICAL PLANS

DWG NO. 80-M-2
DATE NOV. 1990
PROJ NO. SEA24579.N1

DATE: 11-06-90 CJB
DRAWN BY: ERR DESIGNED BY: S.D.HILDRETH
DGN NAME: O:/PROJ2/WENATCHE/WESEED.DGN /WE980M-F.DGN

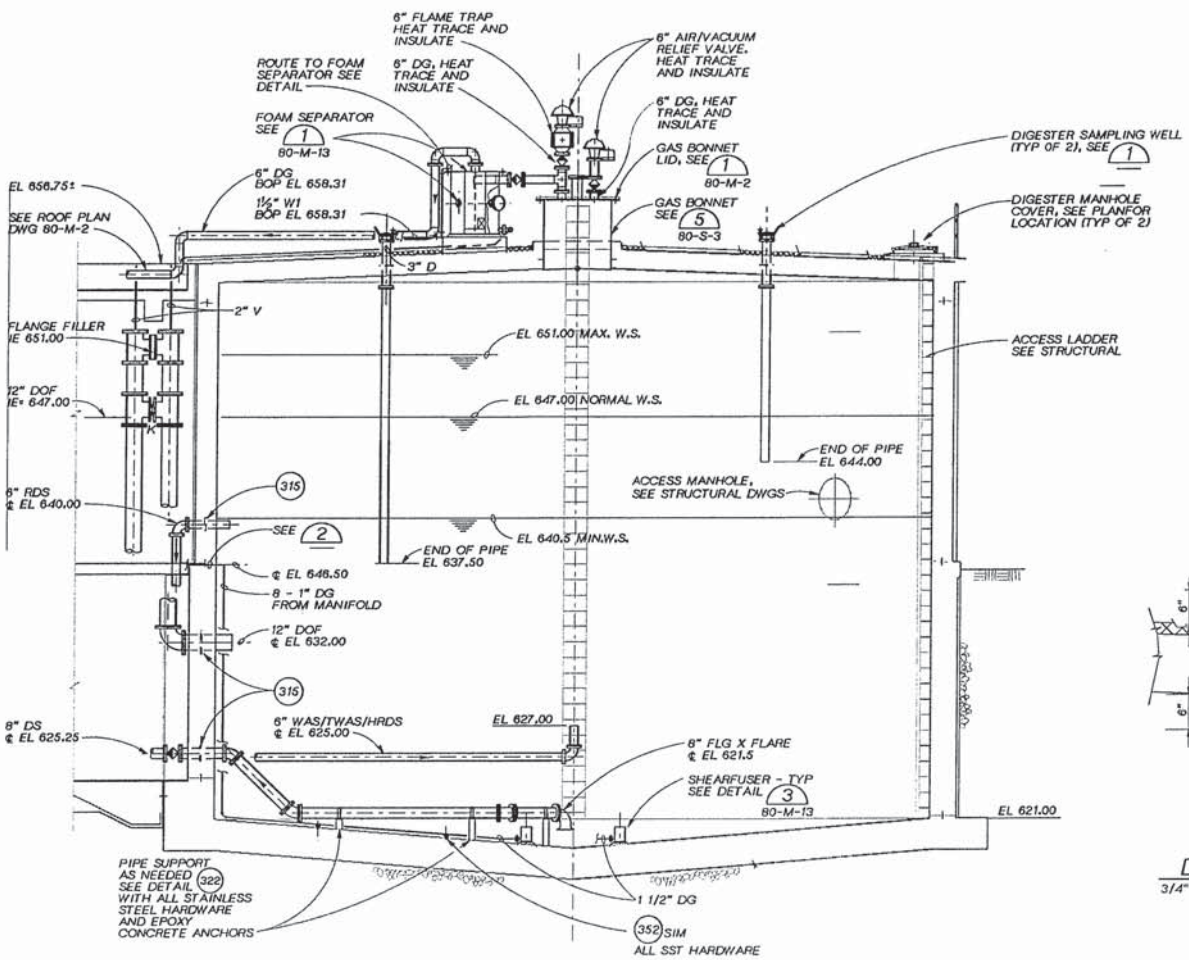

DIGESTER NO. 3 - COMPOSITE SECTION

1/4" = 1'- 0"

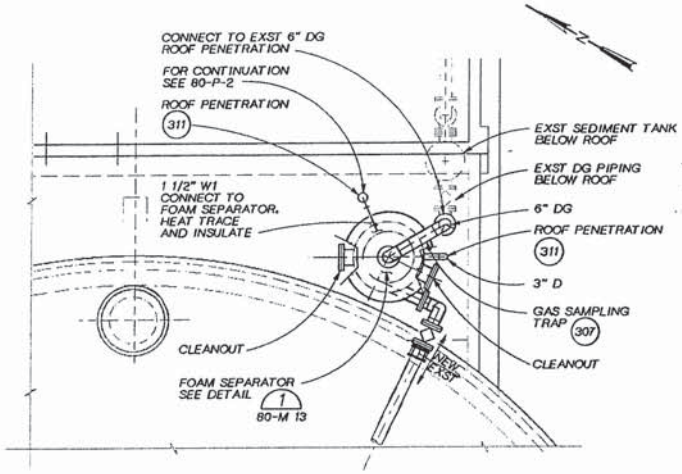

NOTE:
CUT AND REMOVE EXST 6" DG AS NEEDED TO INSTALL FOAM SEPARATOR.

ROOF PARTIAL PLAN - EXISTING DIGESTER NO. 1

3/8" = 1'- 0"

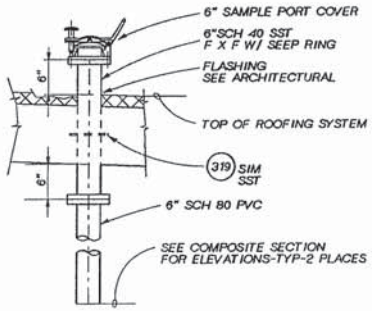

DETAIL 1

3/4" = 1'- 0" 80-M-2

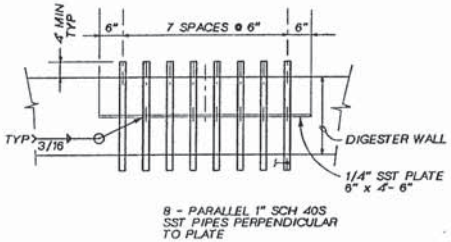

DETAIL 2

1" = 1'- 0" 80-M-2 80-M-3

DSGN S.HILDRETH						
DR E.RONSHAUGEN						
CHK R STAEHLIN						
APVD K HOOD	NO.	DATE	REVISION	BY	APVD	

CH2M HILL

REUSE OF DOCUMENTS
THIS DOCUMENT, AND THE IDEAS AND DESIGNS INCORPORATED HEREIN, AS AN INSTRUMENT OF PROFESSIONAL SERVICE, IS THE PROPERTY OF CH2M HILL AND IS NOT TO BE USED, IN WHOLE OR IN PART, FOR ANY OTHER PROJECT WITHOUT THE WRITTEN AUTHORIZATION OF CH2M HILL.
©CH2M HILL

VERIFY SCALES
BAR IS ONE INCH ON ORIGINAL DRAWING.
0 1"
IF NOT ONE INCH ON THIS SHEET, ADJUST SCALES ACCORDINGLY.

CITY OF WENATCHEE, WASHINGTON
WASTEWATER TREATMENT PLANT IMPROVEMENTS

SOLIDS HANDLING FACILITY
ANAEROBIC DIGESTERS
PLAN, SECTION AND DETAILS

DWG NO. 80-M-3
DATE NOV. 1990
PROJ NO. SEA24579.N1