DATE: 11-06-90 CJB
DRAWN BY: DL CHRISINGER DESIGNED BY: SB HILDRETH
DGN NAME: 0:/PROJ2/WENATCHE/WE080M-B.DGN

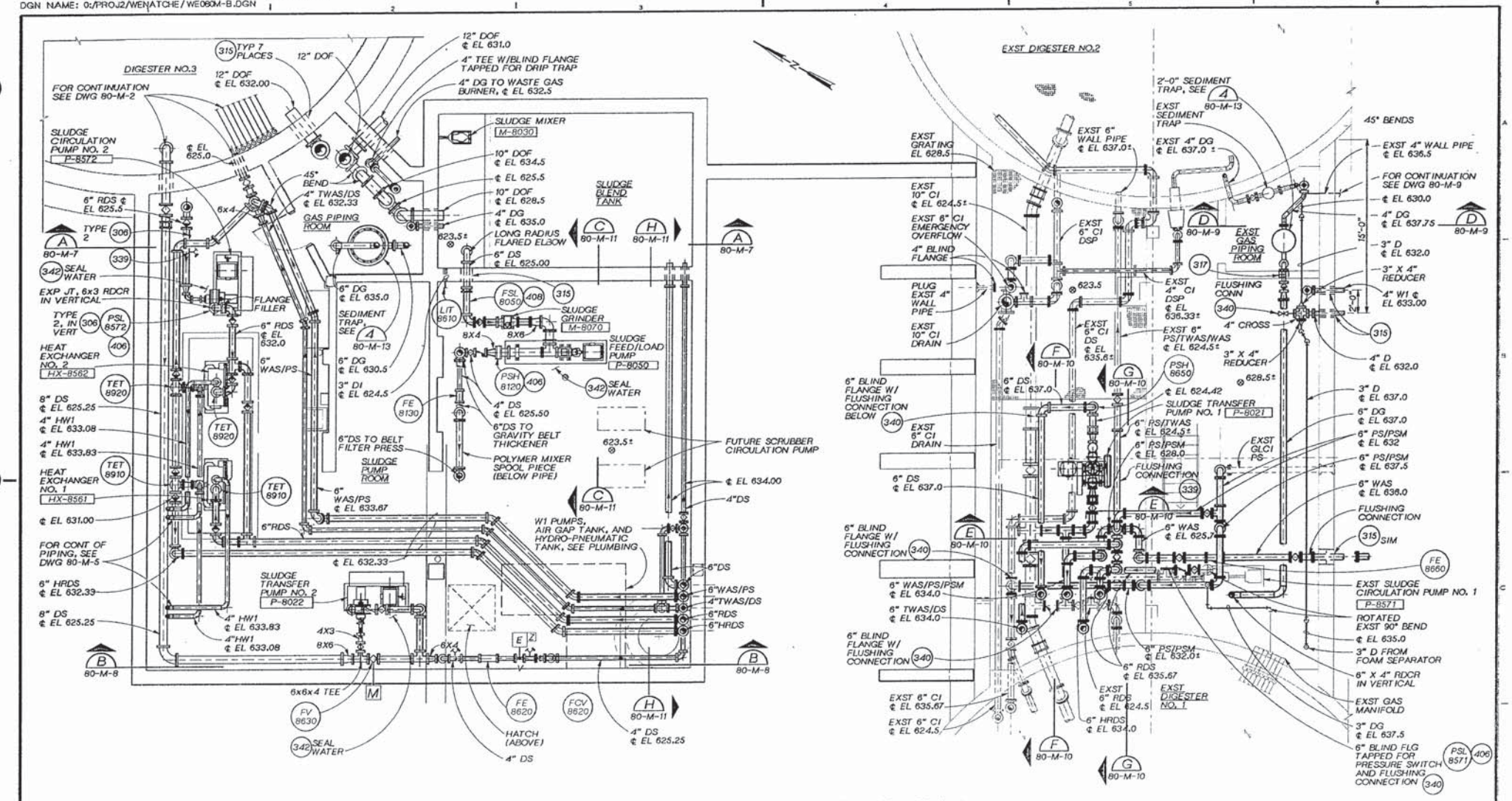

LOWER LEVEL MECHANICAL PLAN

1/4"=1'-0"

NOTE: LOCATIONS OF EXISTING PIPING AND STRUCTURES ARE APPROXIMATE AND MUST BE FIELD VERIFIED.

KAREN A. HOOD PROFESSIONAL ENGINEER

CH2M HILL

DSGN SB HILDRETH
DR DL CHRISINGER
CHK R. STAEHLIN
APVD K HOOD

NO.	DATE	REVISION	BY	APVD

REUSE OF DOCUMENTS
THIS DOCUMENT, AND THE IDEAS AND DESIGNS INCORPORATED HEREIN, AS AN INSTRUMENT OF PROFESSIONAL SERVICE, IS THE PROPERTY OF CH2M HILL AND IS NOT TO BE USED, IN WHOLE OR IN PART, FOR ANY OTHER PROJECT WITHOUT THE WRITTEN AUTHORIZATION OF CH2M HILL.
©CH2M HILL

VERIFY SCALE
BAR IS ONE INCH ON ORIGINAL DRAWING.
0 1"
IF NOT ONE INCH ON THIS SHEET, ADJUST SCALES ACCORDINGLY.

CITY OF WENATCHEE, WASHINGTON
WASTEWATER TREATMENT PLANT IMPROVEMENTS

SOLIDS HANDLING FACILITY
LOWER LEVEL MECHANICAL PLAN

DWG NO. 80-M-4
DATE NOV. 1990
PROJ. NO. SEA24579.N1

DATE: 11-1-90
DRAWN BY: DS / CJB DESIGNED BY: SB HILDRETH
DGN NAME: 0:/PROJ2/WENATCHE/WE080M-C.DGN

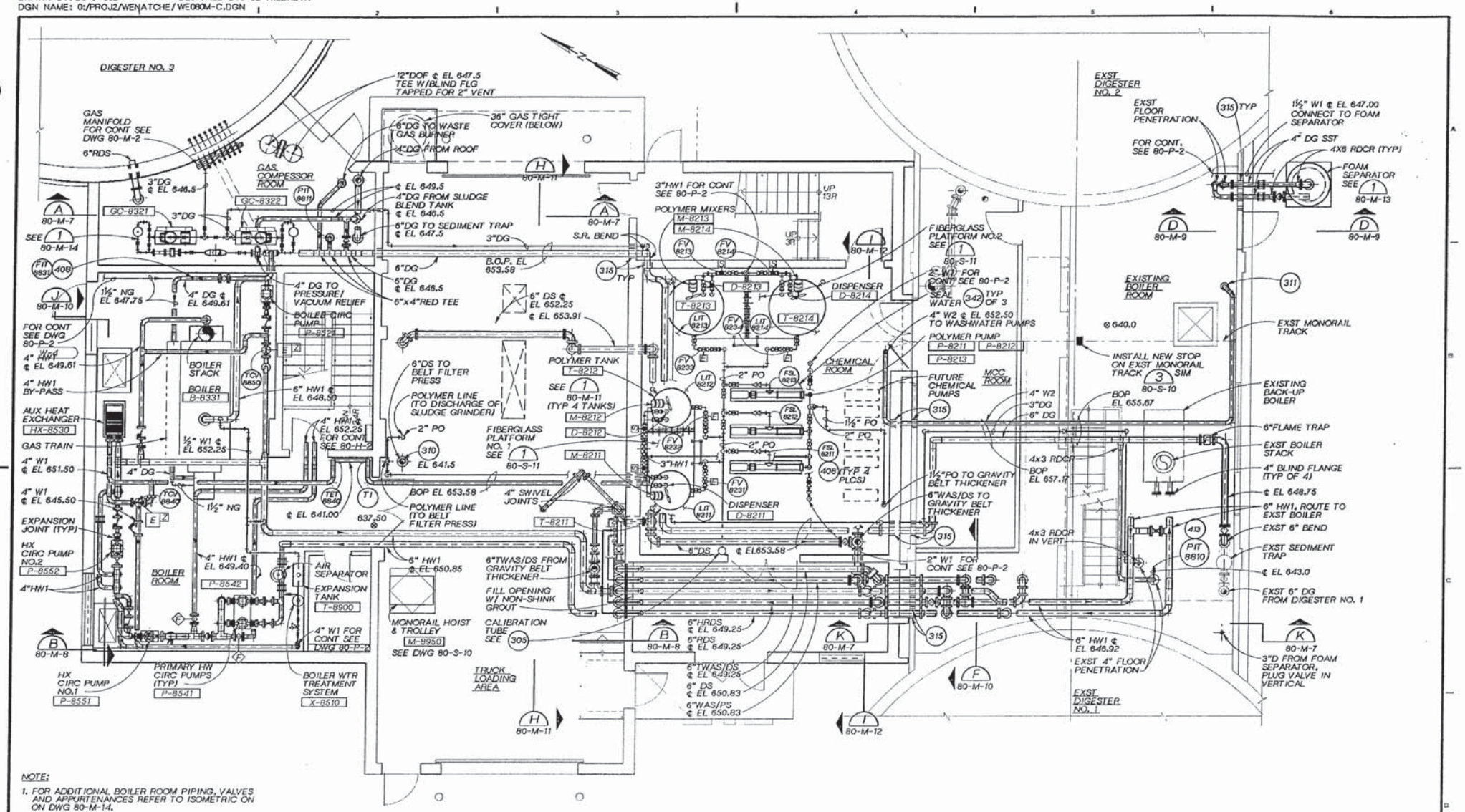

NOTE:

1. FOR ADDITIONAL BOILER ROOM PIPING, VALVES AND APPURTENANCES REFER TO ISOMETRIC ON ON DWG 80-M-14.
2. ALL PUMPS IN SOLIDS HANDLING BLDG SHALL HAVE TEMPORARY GAUGE TAP ON SUCTION AND DISCHARGE PIPING. SEE 306

GROUND LEVEL MECHANICAL PLAN

¼" = 1'-0"

NOTE:
LOCATIONS OF EXISTING PIPING AND STRUCTURES ARE APPROXIMATE AND MUST BE FIELD VERIFIED.

KAREN A. HOOD — STATE OF WASHINGTON — REGISTERED PROFESSIONAL ENGINEER

CH2M HILL

DSGN	SB HILDRETH
DR	DS / CJB
CHK	R. STAEHLIN
APVD	K. HOOD

NO.	DATE	REVISION	BY	APVD

REUSE OF DOCUMENTS
THIS DOCUMENT, AND THE IDEAS AND DESIGNS INCORPORATED HEREIN, AS AN INSTRUMENT OF PROFESSIONAL SERVICE, IS THE PROPERTY OF CH2M HILL AND IS NOT TO BE USED, IN WHOLE OR IN PART, FOR ANY OTHER PROJECT WITHOUT THE WRITTEN AUTHORIZATION OF CH2M HILL.
©CH2M HILL

VERIFY SCALE
BAR IS ONE INCH ON ORIGINAL DRAWING.
0 1"
IF NOT ONE INCH ON THIS SHEET, ADJUST SCALES ACCORDINGLY.

CITY OF WENATCHEE, WASHINGTON
WASTEWATER TREATMENT PLANT IMPROVEMENTS

SOLIDS HANDLING FACILITY
GROUND LEVEL MECHANICAL PLAN

DWG NO. 80-M-5
DATE NOV. 1990
PROJ. NO. SEA24579.N1

DATE: 11-06-90 CJB
DRAWN BY: J. BROWN DESIGNED BY: J. BROWN
DGN NAME: O:/PROJ2/WENATCHE/ WE060M-D.DGN

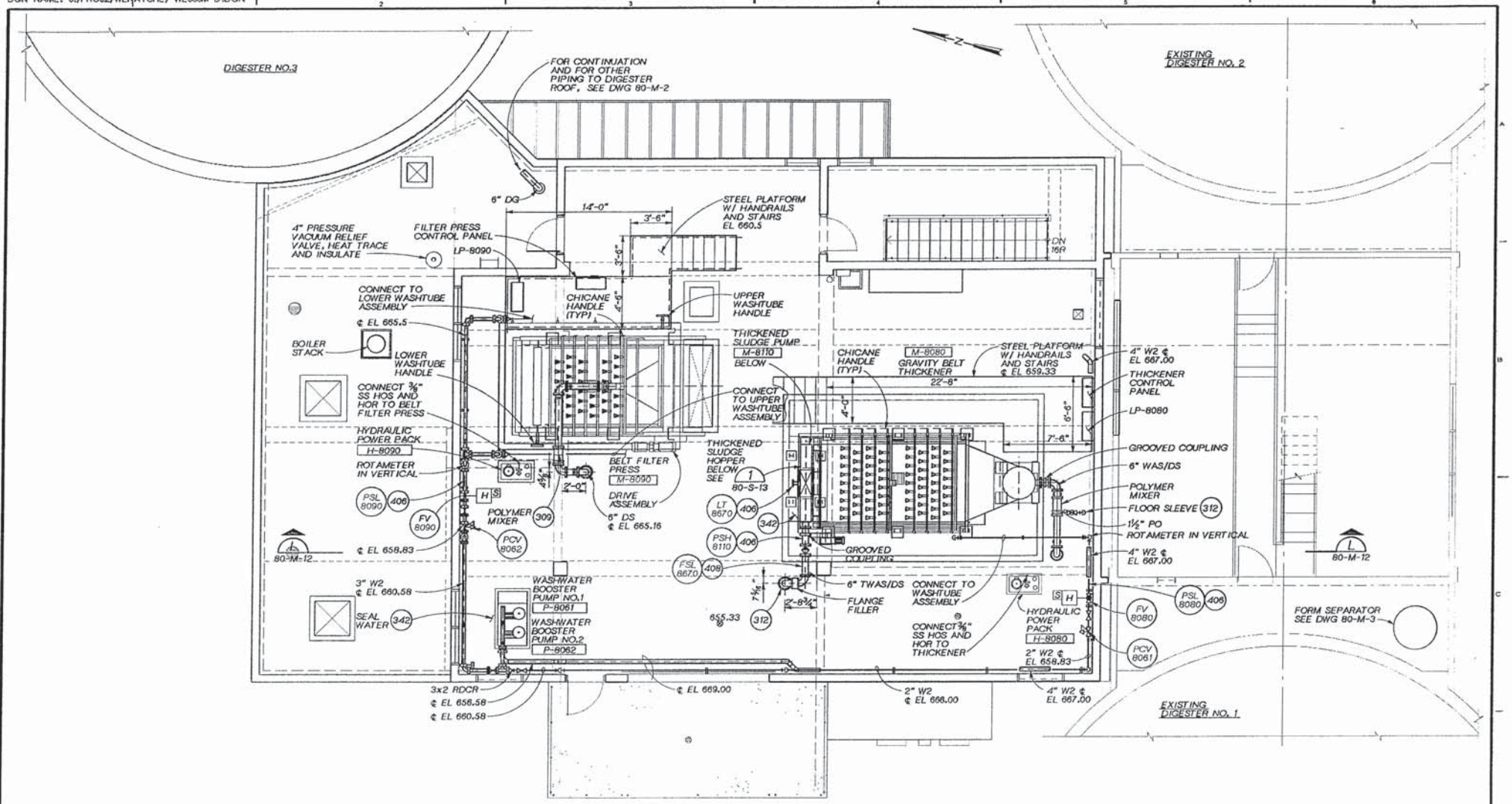

UPPER LEVEL MECHANICAL PLAN

1/4"=1'-0"

KAREN A. HOOD REGISTERED PROFESSIONAL ENGINEER

CH2M HILL

DSGN S. HILDRETH					
DR J. BROWN					
CHK R. STAEHLIN					
APVD K HOOD	NO.	DATE	REVISION	BY	APVD

REUSE OF DOCUMENTS
THIS DOCUMENT, AND THE IDEAS AND DESIGNS INCORPORATED HEREIN, AS AN INSTRUMENT OF PROFESSIONAL SERVICE, IS THE PROPERTY OF CH2M HILL AND IS NOT TO BE USED, IN WHOLE OR IN PART, FOR ANY OTHER PROJECT WITHOUT THE WRITTEN AUTHORIZATION OF CH2M HILL.
©CH2M HILL

BAR IS ONE INCH ON ORIGINAL DRAWING. 0 1"
IF NOT ONE INCH ON THIS SHEET, ADJUST SCALES ACCORDINGLY.

CITY OF WENATCHEE, WASHINGTON
WASTEWATER TREATMENT PLANT IMPROVEMENTS

SOLIDS HANDLING FACILITY
UPPER LEVEL MECHANICAL PLAN

DWG NO. 80-M-6
DATE NOV. 1990
PROJ. NO. SEA24579.N1

DATE: 11-06-90 CJB
DRAWN BY: DL CHRISINGER DESIGNED BY: SB HILDRETH
DGN NAME: O:/PROJ2/WENATCHE/WE080M-P.DGN

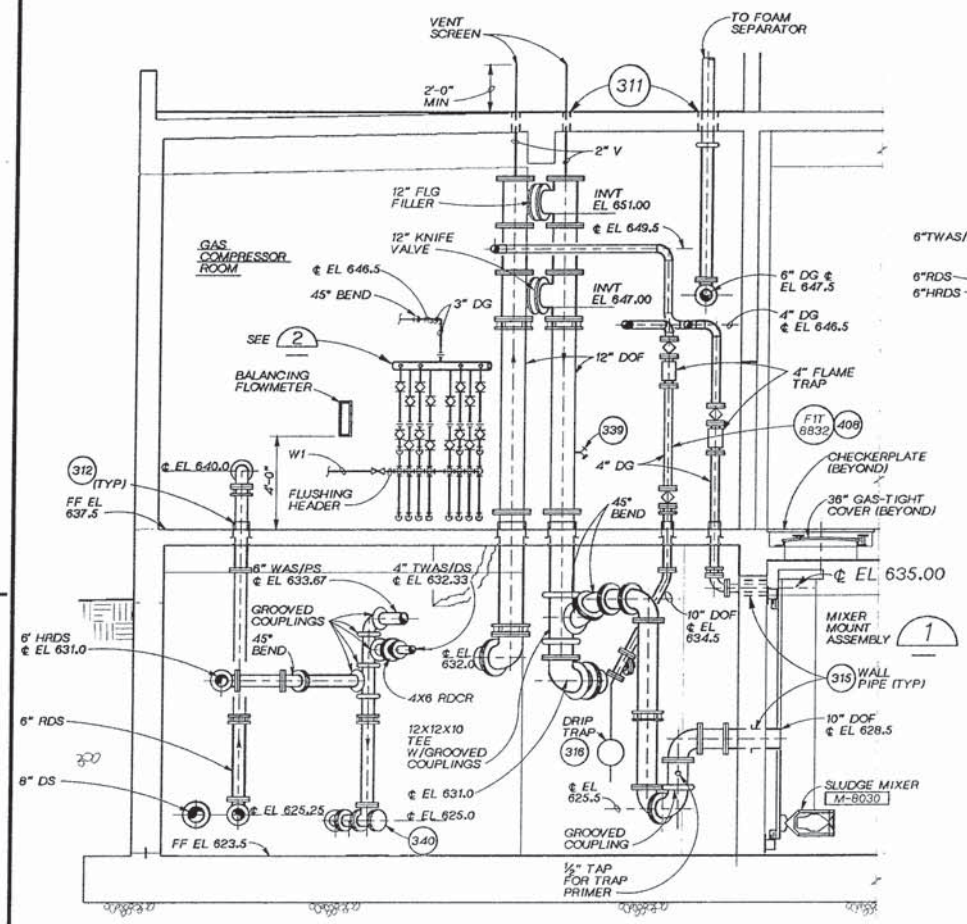

SECTION A
3/8"=1'-0" 80-M-4 80-M-5

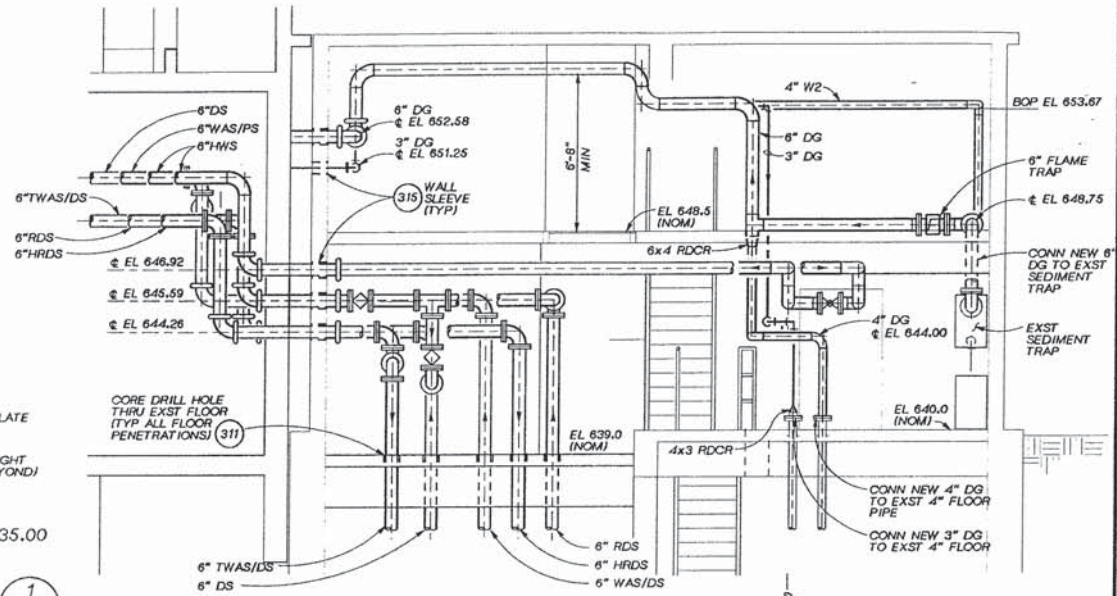

SECTION K
3/8"=1'-0" 80-M-5

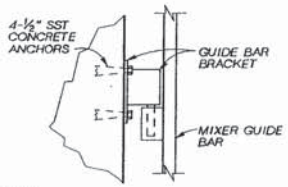

NOTE:
UPPER GUIDE BAR BRACKET SHOWN, LOWER GUIDE BAR BRACKET SIMILAR.

SLUDGE MIXER MOUNTING DETAIL 1
NTS

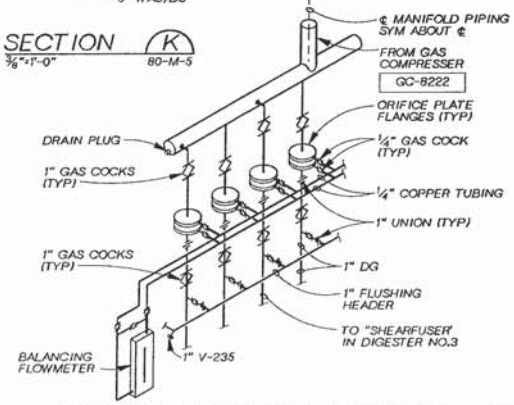

GAS MANIFOLD PIPING DETAIL 2
NTS

NOTE:
LOCATIONS OF EXISTING PIPING AND STRUCTURES ARE APPROXIMATE AND MUST BE FIELD VERIFIED.

KAREN A. HOOD — STATE OF WASHINGTON — 23411 — REGISTERED PROFESSIONAL ENGINEER

CH2M HILL

DSGN	SB HILDRETH
DR	DL CHRISINGER
CHK	R. STAEHLIN
APVD	K HOOD

NO.	DATE	REVISION	BY	APVD

REUSE OF DOCUMENTS
THIS DOCUMENT, AND THE IDEAS AND DESIGNS INCORPORATED HEREIN, AS AN INSTRUMENT OF PROFESSIONAL SERVICE, IS THE PROPERTY OF CH2M HILL AND IS NOT TO BE USED, IN WHOLE OR IN PART, FOR ANY OTHER PROJECT WITHOUT THE WRITTEN AUTHORIZATION OF CH2M HILL.
©CH2M HILL

BAR IS ONE INCH ON ORIGINAL DRAWING. 0 1"
IF NOT ONE INCH ON THIS SHEET, ADJUST SCALES ACCORDINGLY.

CITY OF WENATCHEE, WASHINGTON
WASTEWATER TREATMENT PLANT IMPROVEMENTS

SOLIDS HANDLING FACILITY
MECHANICAL SECTIONS

DWG NO. 80-M-7
DATE NOV. 1990
PROJ. NO. SEA24579.N1

DATE: 11-06-90 CJB
DRAWN BY: D.STEELE DESIGNED BY: SB HILDRETH
DGN NAME: 0:/PROJ2/WENATCHE/WE060M-Q.DGN

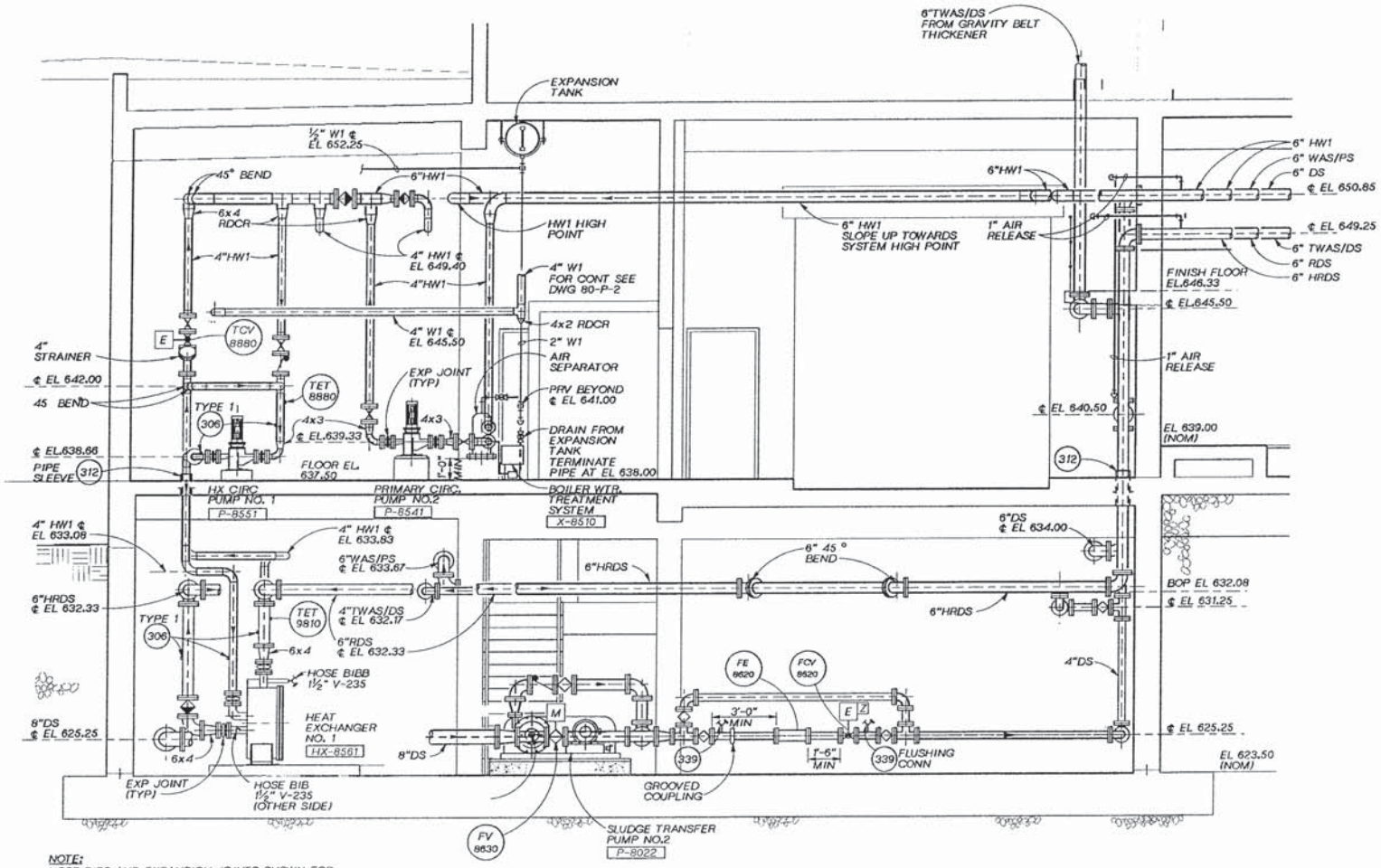

NOTE:
HOSE BIBS AND EXPANSION JOINTS SHOWN FOR HEAT EXCHANGER NO.1 ARE TYPICAL FOR HEAT EXCHANGER NO.2.

SECTION B
3/8"=1'-0"
80-M-4
80-M-5

KAREN A. HOOD STATE OF WASHINGTON PROFESSIONAL ENGINEER

CH2M HILL

DSGN	SB HILDRETH
DR	DS / CJB
CHK	R. STAEHLIN
APVD	K HOOD

NO.	DATE	REVISION	BY	APVD

REUSE OF DOCUMENTS
THIS DOCUMENT, AND THE IDEAS AND DESIGNS INCORPORATED HEREIN, AS AN INSTRUMENT OF PROFESSIONAL SERVICE, IS THE PROPERTY OF CH2M HILL AND IS NOT TO BE USED, IN WHOLE OR IN PART, FOR ANY OTHER PROJECT WITHOUT THE WRITTEN AUTHORIZATION OF CH2M HILL.
©CH2M HILL

SCALE BAR
BAR IS ONE INCH ON ORIGINAL DRAWING.
0 1"
IF NOT ONE INCH ON THIS SHEET, ADJUST SCALES ACCORDINGLY.

CITY OF WENATCHEE, WASHINGTON
WASTEWATER TREATMENT PLANT IMPROVEMENTS

SOLIDS HANDLING FACILITY
MECHANICAL SECTION

DWG NO. 80-M-8
DATE NOV. 1990
PROJ NO. SEA24579.N1

DRAWN BY: D CHRISINGER DESIGNED BY: DL CHRISINGER
DGN NAME: O:/PROJ2/WENATCHE/WE080M-G.DGN

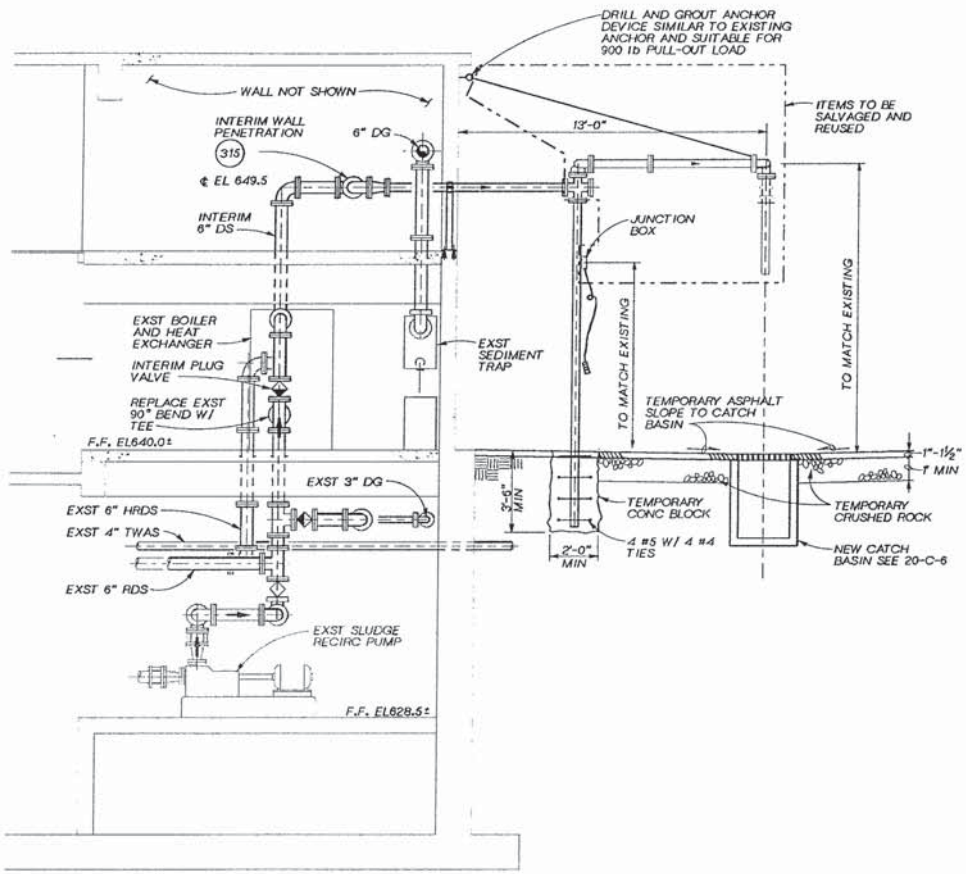

INTERIM SLUDGE LOADING STATION

SECTION (M)
NTS 80-M-1

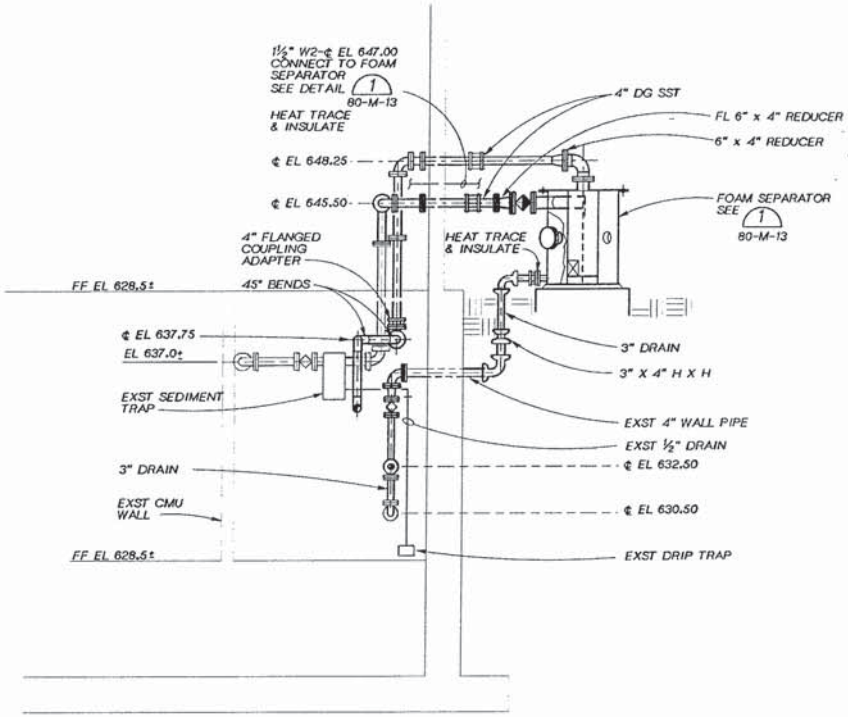

SECTION (D)
3/8" = 1'-0" 80-M-4 80-M-5

NOTE:
LOCATIONS OF EXISTING PIPING AND STRUCTURES ARE APPROXIMATE AND MUST BE FIELD VERIFIED.

KAREN A. HOOD STATE OF WASHINGTON 19000 REGISTERED PROFESSIONAL ENGINEER

CH2M HILL

DSGN SB HILDRETH					
DR DL CHRISINGER					
CHK R. STAEHLIN					
APVD K HOOD	NO.	DATE	REVISION	BY	APVD

REUSE OF DOCUMENTS
THIS DOCUMENT, AND THE IDEAS AND DESIGNS INCORPORATED HEREIN, AS AN INSTRUMENT OF PROFESSIONAL SERVICE, IS THE PROPERTY OF CH2M HILL AND IS NOT TO BE USED, IN WHOLE OR IN PART, FOR ANY OTHER PROJECT WITHOUT THE WRITTEN AUTHORIZATION OF CH2M HILL.
© CH2M HILL

VERIFY SCALE
BAR IS ONE INCH ON ORIGINAL DRAWING.
0 1"
IF NOT ONE INCH ON THIS SHEET, ADJUST SCALES ACCORDINGLY.

CITY OF WENATCHEE, WASHINGTON
WASTEWATER TREATMENT PLANT IMPROVEMENTS

SOLIDS HANDLING FACILITY
MECHANICAL SECTIONS

DWG NO. 80-M-9
DATE NOV. 1990
PROJ NO. SEA24579.N1

DATE: 11-05-90 CJB
DRAWN BY: DL CHRISINGER DESIGNED BY: DL CHRISINGER
DGN NAME: O:/PROJ2/WENATCHE/WE080M-K.DGN

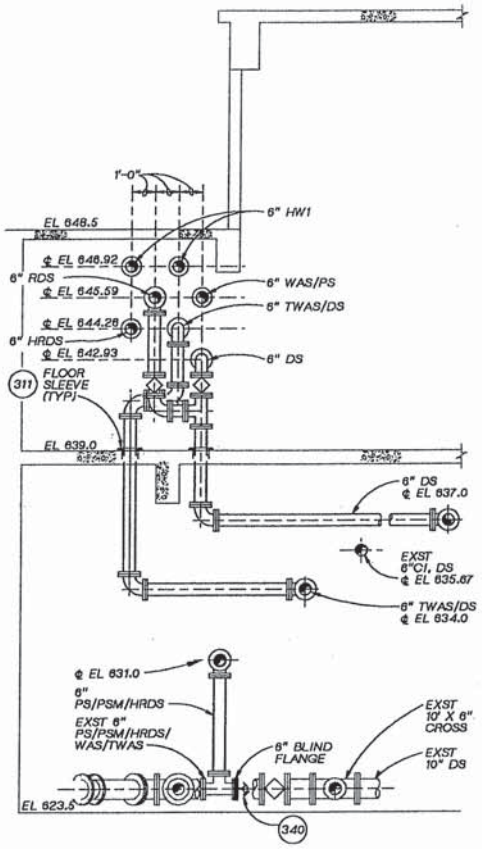

SECTION F
3/8" = 1'- 0"
80-M-4

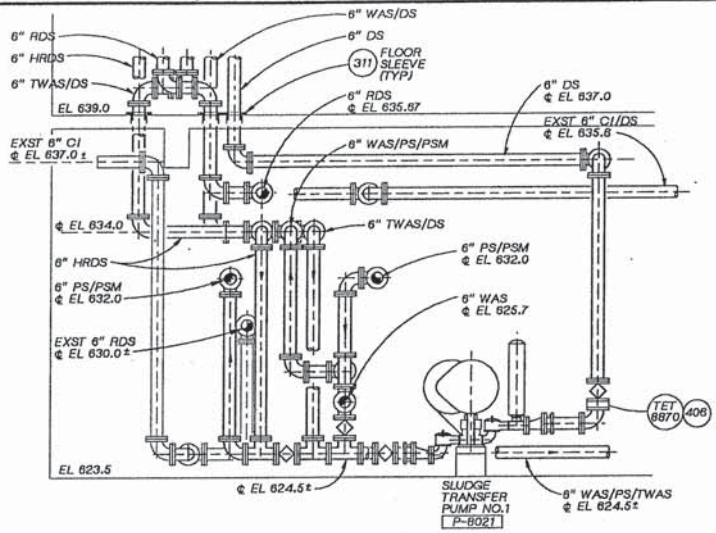

SECTION G
3/8" = 1'- 0"
80-M-4

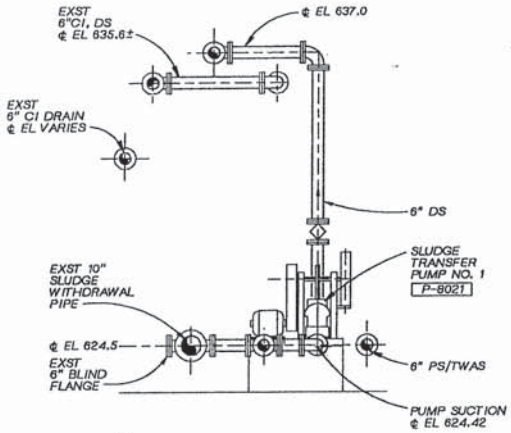

SECTION E
3/8" = 1'- 0"
80-M-4

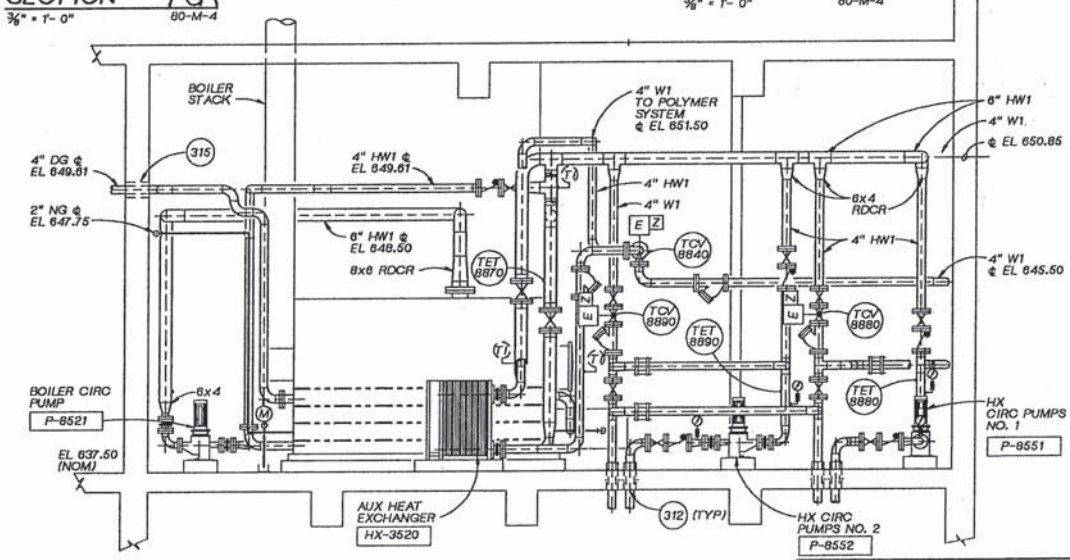

SECTION J
3/8"=1'-0"
80-M-5

NOTE:
LOCATIONS OF EXISTING PIPING AND STRUCTURES ARE APPROXIMATE AND MUST BE FIELD VERIFIED.

KAREN A. HOOD — STATE OF WASHINGTON — REGISTERED PROFESSIONAL ENGINEER

CH2M HILL

DSGN SB HILDRETH					
DR DL CHRISINGER					
CHK R STAEHLIN					
APVD K HOOD	NO.	DATE	REVISION	BY	APVD

REUSE OF DOCUMENTS
THIS DOCUMENT, AND THE IDEAS AND DESIGNS INCORPORATED HEREIN, AS AN INSTRUMENT OF PROFESSIONAL SERVICE, IS THE PROPERTY OF CH2M HILL AND IS NOT TO BE USED, IN WHOLE OR IN PART, FOR ANY OTHER PROJECT WITHOUT THE WRITTEN AUTHORIZATION OF CH2M HILL.
©CH2M HILL

BAR IS ONE INCH ON ORIGINAL DRAWING.
0 1"
IF NOT ONE INCH ON THIS SHEET, ADJUST SCALES ACCORDINGLY.

CITY OF WENATCHEE, WASHINGTON
WASTEWATER TREATMENT PLANT IMPROVEMENTS

SOLIDS HANDLING FACILITY
MECHANICAL SECTIONS

DWG NO. 80-M-10
DATE NOV. 1990
PROJ. NO. SEA24579.N1

DATE: 11-05-90 CJB
DRAWN BY: D.STEELE DESIGNED BY:
DGN NAME: 0:/PROJ2/WENATCHE/WE080M-N.DGN

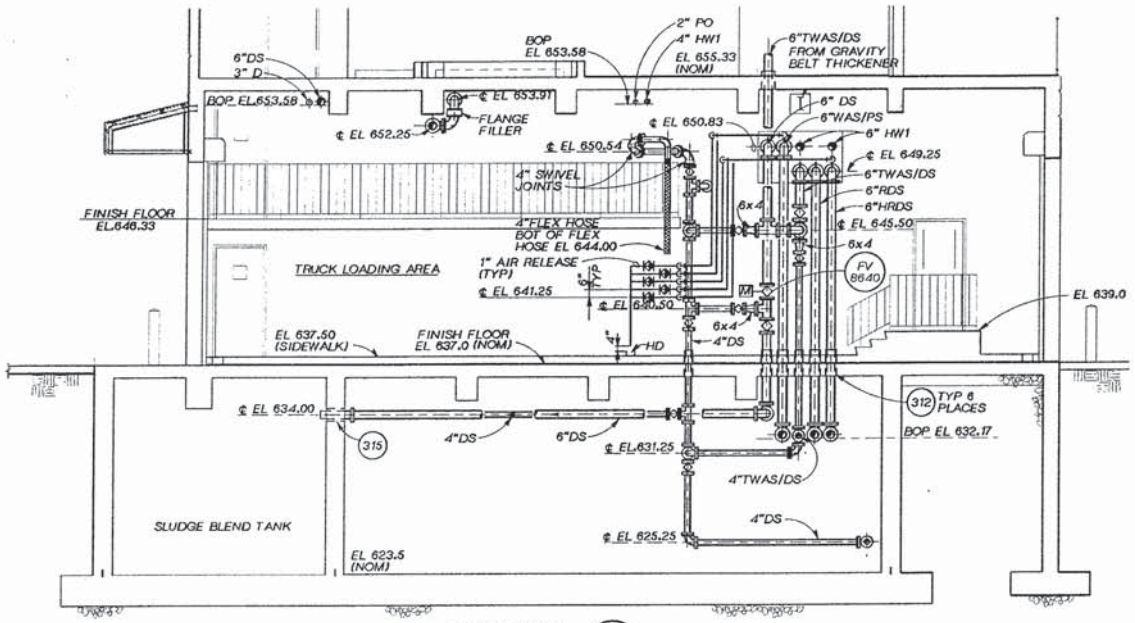

SECTION H
1/4"=1'-0"
80-M-5

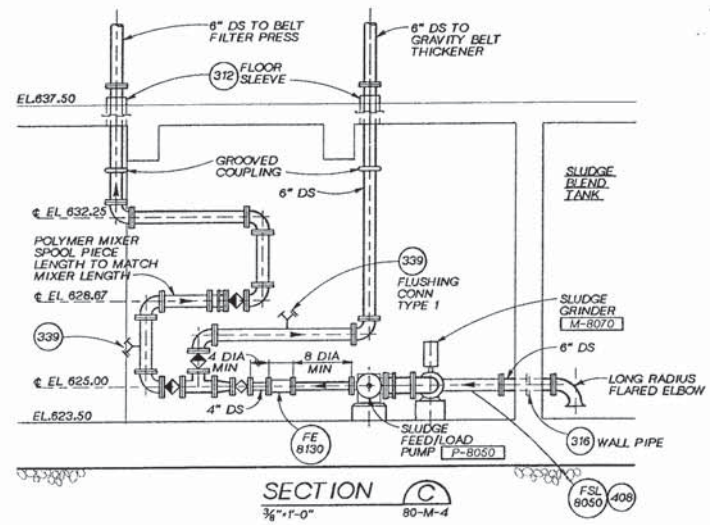

SECTION C
3/8"=1'-0"
80-M-4

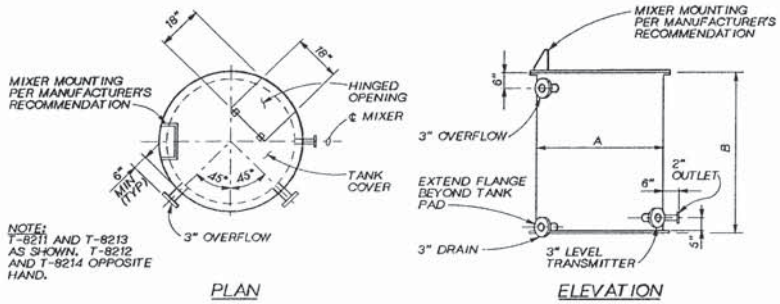

NOTE:
T-8211 AND T-8213 AS SHOWN. T-8212 AND T-8214 OPPOSITE HAND.

PLAN

ELEVATION

TANK NO.	A	B
T-8211	3'-6"	5'-0"
T-8212	3'-6"	5'-0"
T-8213	5'-0"	6'-6"
T-8214	5'-0"	6'-6"

POLYMER TANK DETAIL 1
NTS
80-M-5
80-M-12

KAREN A. HOOD
STATE OF WASHINGTON
PROFESSIONAL ENGINEER

CH2M HILL

DSGN S.HILDRETH
DR D.STEELE
CHK R. STAEHLIN
APVD K. HOOD

NO.	DATE	REVISION	BY	APVD

REUSE OF DOCUMENTS
THIS DOCUMENT, AND THE IDEAS AND DESIGNS INCORPORATED HEREIN, AS AN INSTRUMENT OF PROFESSIONAL SERVICE, IS THE PROPERTY OF CH2M HILL AND IS NOT TO BE USED, IN WHOLE OR IN PART, FOR ANY OTHER PROJECT WITHOUT THE WRITTEN AUTHORIZATION OF CH2M HILL.
©CH2M HILL

VERIFY SCALE
BAR IS ONE INCH ON ORIGINAL DRAWING.
0 1"
IF NOT ONE INCH ON THIS SHEET, ADJUST SCALES ACCORDINGLY.

CITY OF WENATCHEE, WASHINGTON
WASTEWATER TREATMENT PLANT IMPROVEMENTS

SOLIDS HANDLING FACILITY
MECHANICAL SECTIONS

DWG NO. 80-M-11
DATE NOV. 1990
PROJ. NO. SEA24579.N1

DATE: 11-03-90 KJR
DRAWN BY: E.RONSHAUGEN DESIGNED BY: S.HILDRETH
DGN NAME: 0:/PROJ2/WENATCHE/ WE080M-R.DGN

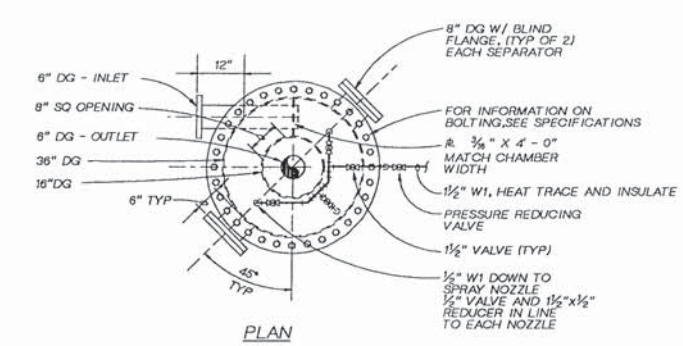

PLAN

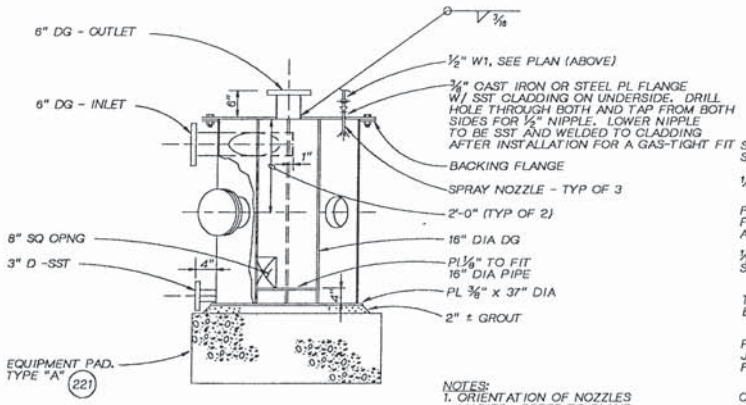

NOTES:
1. ORIENTATION OF NOZZLES VARIES. REFER TO PLANS.
2. FABRICATE FROM 304 STAINLESS STEEL PLATE AND PIPING.

ELEVATION/SECTION

FOAM SEPARATOR (1)

3/4" = 1'-0"

80-M-2
80-M-3
80-M-5
80-M-9

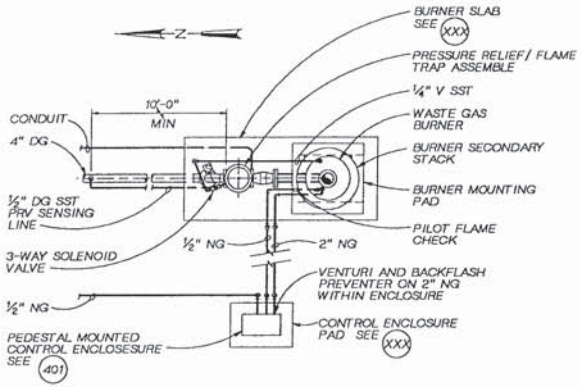

PLAN

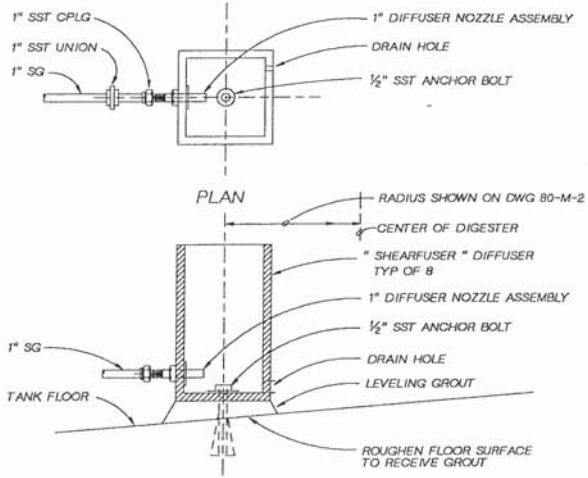

PLAN

SECTION

TYPICAL SHEARFUSER - DETAIL (3)

NTS

80-M-2
80-M-3

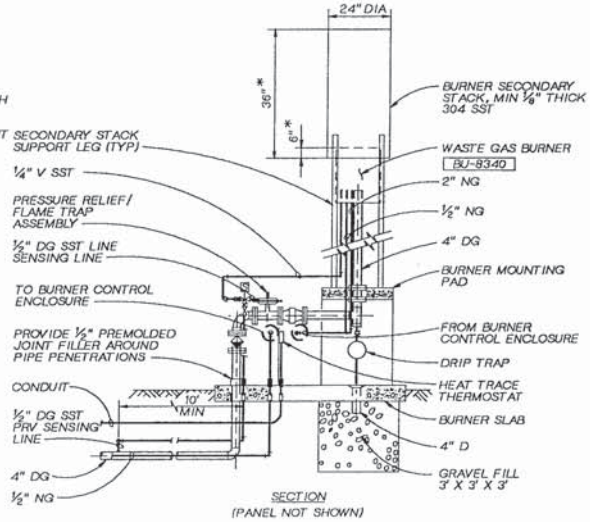

SECTION
(PANEL NOT SHOWN)

* - DIMENSIONS TO BE VERIFIED BY SECONDARY STACK SUPPLIER.

NOTE:
ALL EXPOSED PIPING TO BE HEAT TRACED AND INSULATED.

WASTE GAS BURNER DETAIL (2)

NTS 20-C-6

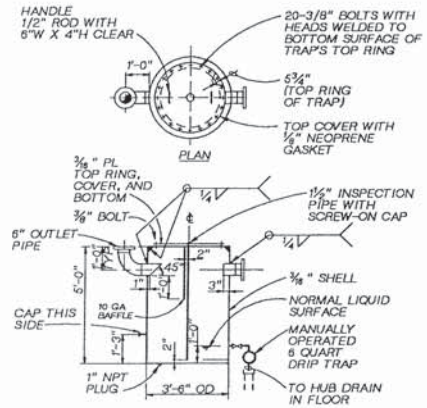

SECTION

NOTE:
FABRICATE FROM CARBON STEEL WITH PIPING PER SPECIFICATIONS.

SEDIMENT TRAP DETAIL (4)

NTS 80-M-4

KAREN A. HOOD
STATE OF WASHINGTON
PROFESSIONAL ENGINEER

CH2M HILL

DSGN	S HILDRETH				
DR	E RONSHAUGEN				
CHK	R STAEHLIN				
APVD	K HOOD	NO.	DATE	REVISION	BY	APVD

REUSE OF DOCUMENTS
THIS DOCUMENT, AND THE IDEAS AND DESIGNS INCORPORATED HEREIN, AS AN INSTRUMENT OF PROFESSIONAL SERVICE, IS THE PROPERTY OF CH2M HILL AND IS NOT TO BE USED, IN WHOLE OR IN PART, FOR ANY OTHER PROJECT WITHOUT THE WRITTEN AUTHORIZATION OF CH2M HILL.
©CH2M HILL

BAR IS ONE INCH ON ORIGINAL DRAWING.
0 1" SCALE: FULL
IF NOT ONE INCH ON THIS SHEET, ADJUST SCALES ACCORDINGLY.

CITY OF WENATCHEE, WASHINGTON
WASTEWATER TREATMENT PLANT IMPROVEMENTS

SOLIDS HANDLING FACILITY
MECHANICAL DETAILS

DWG NO. 80-M-13
DATE NOV. 1990
PROJ NO. SEA24579.N1

DATE: 11-04-90 KJR
DRAWN BY: E. RONSHAUGEN DESIGNED BY: S. HILDRETH
DGN NAME: 0:/PROJ2/WENATCHE/WE080M-0.DGN

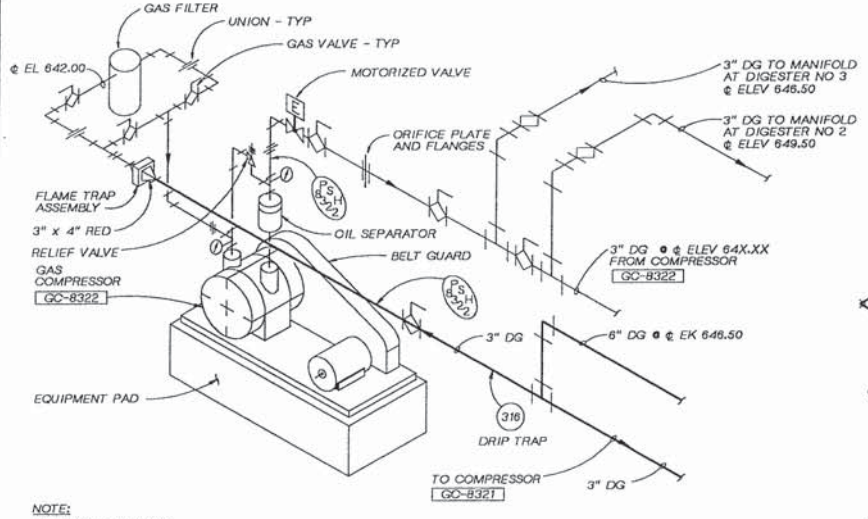

NOTE:
EQUIPMENT, PIPING & INSTRUMENTATION SHOWN IS TYPICAL FOR BOTH COMPRESSORS

GAS COMPRESSOR DETAIL (1) 80-M-5

NTS

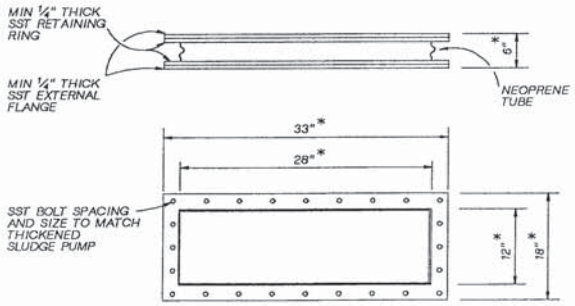

* - DIMENSIONS TO BE VERIFIED FOR CONFORMANCE WITH CERTIFIED DRAWINGS OF THICKENED SLUDGE PUMP.

FLEXIBLE BOOT DETAIL (2) 80-M-12

NTS

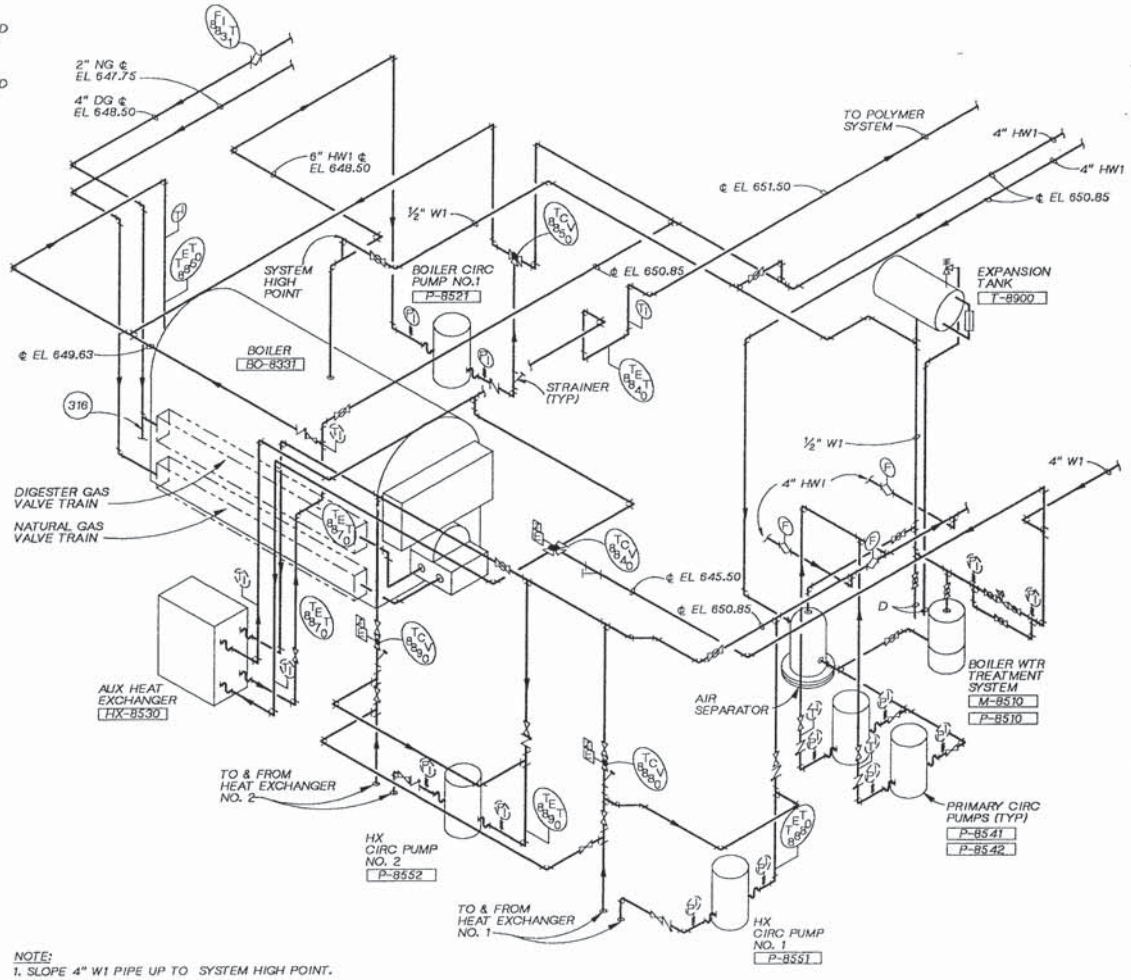

NOTE:
1. SLOPE 4" W1 PIPE UP TO SYSTEM HIGH POINT.

DIGESTER HOT WATER SYSTEM ISOMETRIC

NTS

KAREN A. HOOD STATE OF WASHINGTON 13679 REGISTERED PROFESSIONAL ENGINEER

CH2M HILL

DSGN	S HILDRETH				
DR	ER CJB				
CHK	R STAEHLIN				
APVD	K HOOD	NO.	DATE	REVISION	BY	APVD

REUSE OF DOCUMENTS
THIS DOCUMENT, AND THE IDEAS AND DESIGNS INCORPORATED HEREIN, AS AN INSTRUMENT OF PROFESSIONAL SERVICE, IS THE PROPERTY OF CH2M HILL AND IS NOT TO BE USED, IN WHOLE OR IN PART, FOR ANY OTHER PROJECT WITHOUT THE WRITTEN AUTHORIZATION OF CH2M HILL.
©CH2M HILL

BAR IS ONE INCH ON ORIGINAL DRAWING. 0 1"
IF NOT ONE INCH ON THIS SHEET, ADJUST SCALES ACCORDINGLY.

CITY OF WENATCHEE, WASHINGTON
WASTEWATER TREATMENT PLANT IMPROVEMENTS

SOLIDS HANDLING FACILITY
MECHANICAL DETAILS AND ISOMETRICS

DWG NO. 80-M-14
DATE NOV. 1990
PROJ NO. SEA24579.N1

DATE: 11/4/90
DRAWN BY: S.D.GUNDY DESIGNED BY: S.D.GUNDY
DGN NAME: O:/PROJ2/WENATCHE/WE080P-A.DGN

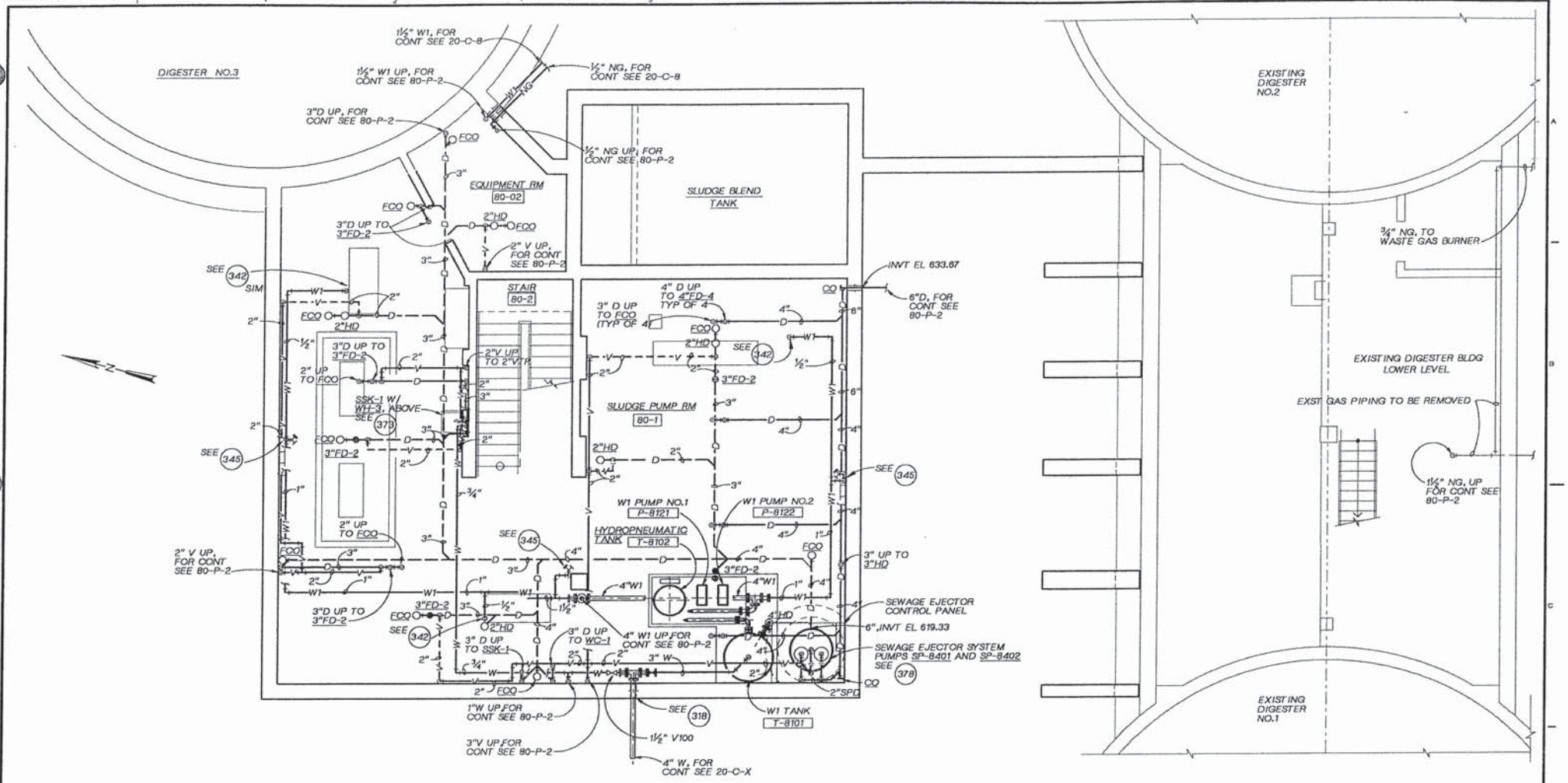

LOWER LEVEL FLOOR PLAN

¼" = 1'- 0"

DSGN S.D.GUNDY					
DR S.D.GUNDY					
CHK R.W.REGER					
APVD K HOOD	NO.	DATE	REVISION	BY	APVD

REUSE OF DOCUMENTS
THIS DOCUMENT, AND THE IDEAS AND DESIGNS INCORPORATED HEREIN, AS AN INSTRUMENT OF PROFESSIONAL SERVICE, IS THE PROPERTY OF CH2M HILL AND IS NOT TO BE USED, IN WHOLE OR IN PART, FOR ANY OTHER PROJECT WITHOUT THE WRITTEN AUTHORIZATION OF CH2M HILL.
©CH2M HILL

BAR IS ONE INCH ON ORIGINAL DRAWING.
0 1" IF NOT ONE INCH ON THIS SHEET, ADJUST SCALES ACCORDINGLY.

CITY OF WENATCHEE, WASHINGTON
WASTEWATER TREATMENT PLANT IMPROVEMENTS

SOLIDS HANDLING FACILITY
LOWER LEVEL PLUMBING PLAN

DWG NO. 80-P-1
DATE NOV. 1990
PROJ. NO. SEA24579.N1

DATE: 11/4/90
DRAWN BY: S.D.GUNDY DESIGNED BY: S.D.GUNDY
DGN NAME: O:/PROJ2/WENATCHE/WE080P-8.DGN

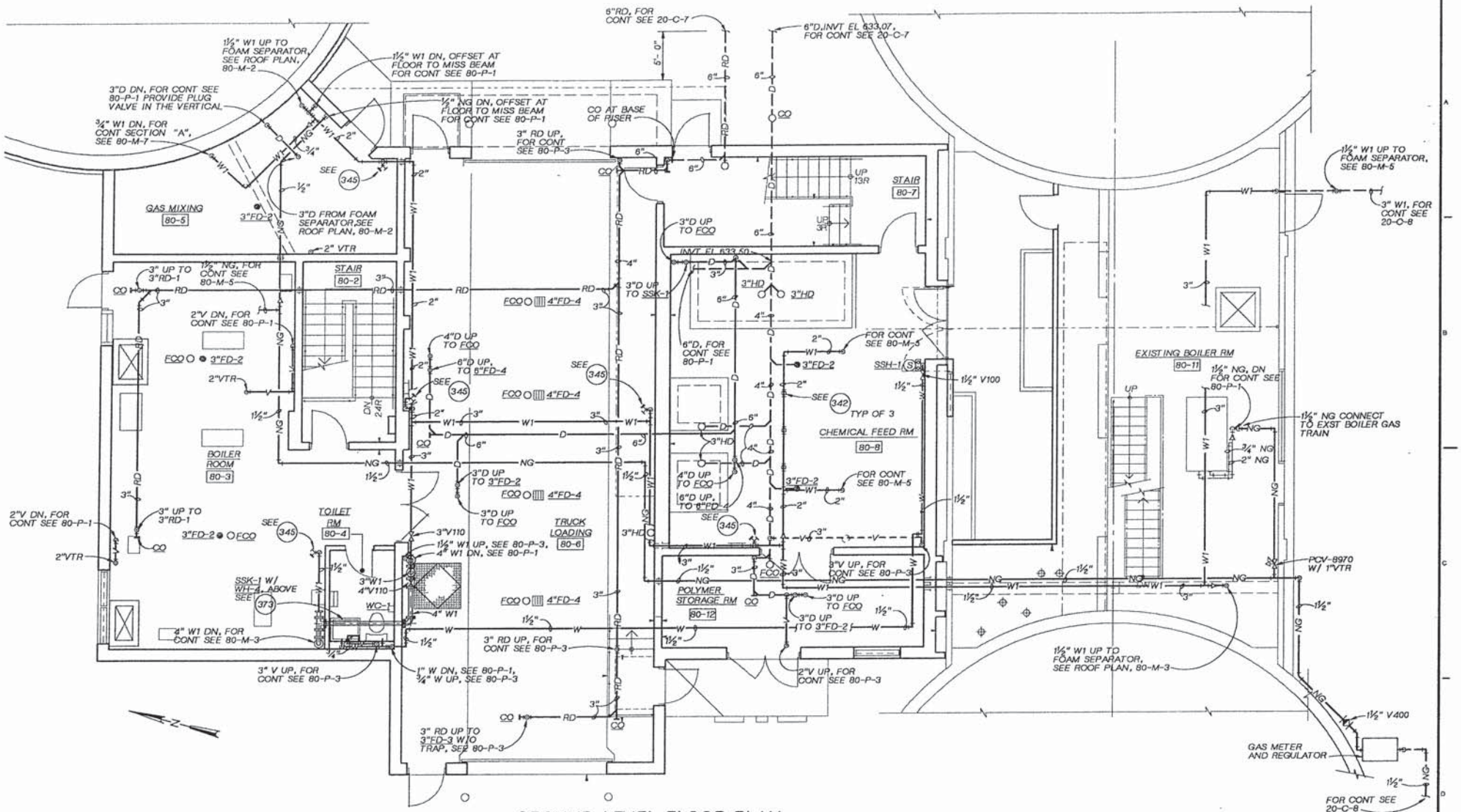

GROUND LEVEL FLOOR PLAN

¼" = 1'- 0"

CH2M HILL	DSGN S.D.GUNDY DR S.D.GUNDY CHK R.W.REGER APVD K HOOD	NO. DATE REVISION BY APVD	**REUSE OF DOCUMENTS** THIS DOCUMENT, AND THE IDEAS AND DESIGNS INCORPORATED HEREIN, AS AN INSTRUMENT OF PROFESSIONAL SERVICE, IS THE PROPERTY OF CH2M HILL AND IS NOT TO BE USED, IN WHOLE OR IN PART, FOR ANY OTHER PROJECT WITHOUT THE WRITTEN AUTHORIZATION OF CH2M HILL. ©CH2M HILL	BAR IS ONE INCH ON ORIGINAL DRAWING. 0 1" IF NOT ONE INCH ON THIS SHEET, ADJUST SCALES ACCORDINGLY.	CITY OF WENATCHEE, WASHINGTON WASTEWATER TREATMENT PLANT IMPROVEMENTS

SOLIDS HANDLING FACILITY
GROUND LEVEL PLUMBING PLAN

DWG NO. 80-P-2
DATE NOV. 1990
PROJ NO. SEA24579.N1

DATE: 11/4/90
DRAWN BY: S.D.GUNDY DESIGNED BY: S.D.GUNDY
DGN NAME: O:/PROJ2/WENATCHE/WE080P-C.DGN

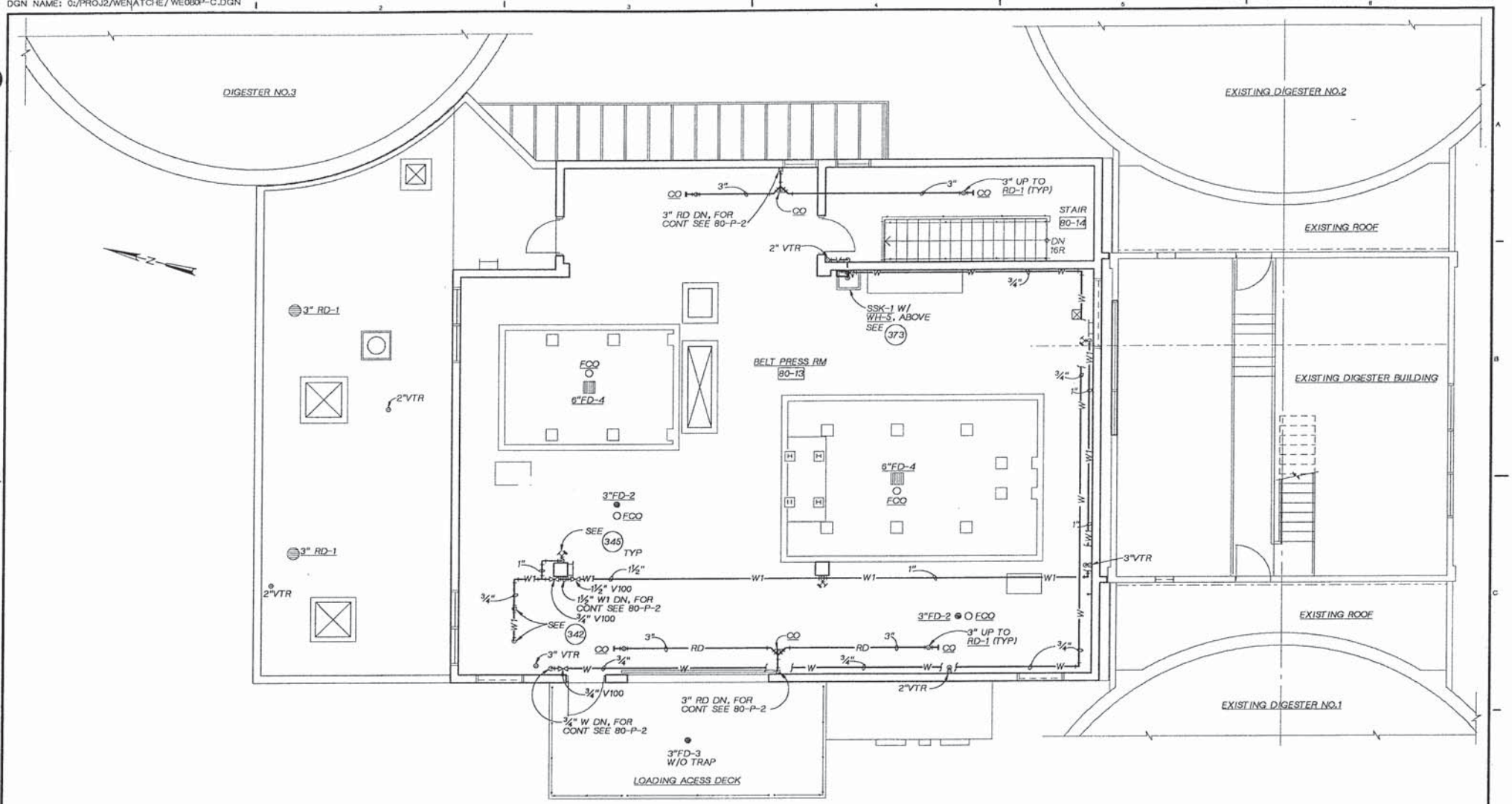

UPPER LEVEL FLOOR PLAN

¼" =1'- 0"

DSGN S.D.GUNDY						
DR S.D.GUNDY						
CHK R.W.REGER						
APVD K HOOD	NO.	DATE	REVISION	BY	APVD	

REUSE OF DOCUMENTS
THIS DOCUMENT, AND THE IDEAS AND DESIGNS INCORPORATED HEREIN, AS AN INSTRUMENT OF PROFESSIONAL SERVICE, IS THE PROPERTY OF CH2M HILL AND IS NOT TO BE USED, IN WHOLE OR IN PART, FOR ANY OTHER PROJECT WITHOUT THE WRITTEN AUTHORIZATION OF CH2M HILL.
©CH2M HILL

BAR IS ONE INCH ON ORIGINAL DRAWING.
0 1"
IF NOT ONE INCH ON THIS SHEET, ADJUST SCALES ACCORDINGLY.

CITY OF WENATCHEE, WASHINGTON
WASTEWATER TREATMENT PLANT IMPROVEMENTS

SOLIDS HANDLING FACILITY
UPPER LEVEL PLUMBING PLAN

DWG NO. 80-P-3
DATE NOV. 1990
PROJ. NO. SEA24579.N1

DATE: 11/2/90
DRAWN BY: S.D.GUNDY DESIGNED BY: S.D.GUNDY
DGN NAME: O:/PROJ2/WENATCHE/WE080H-A.DGN

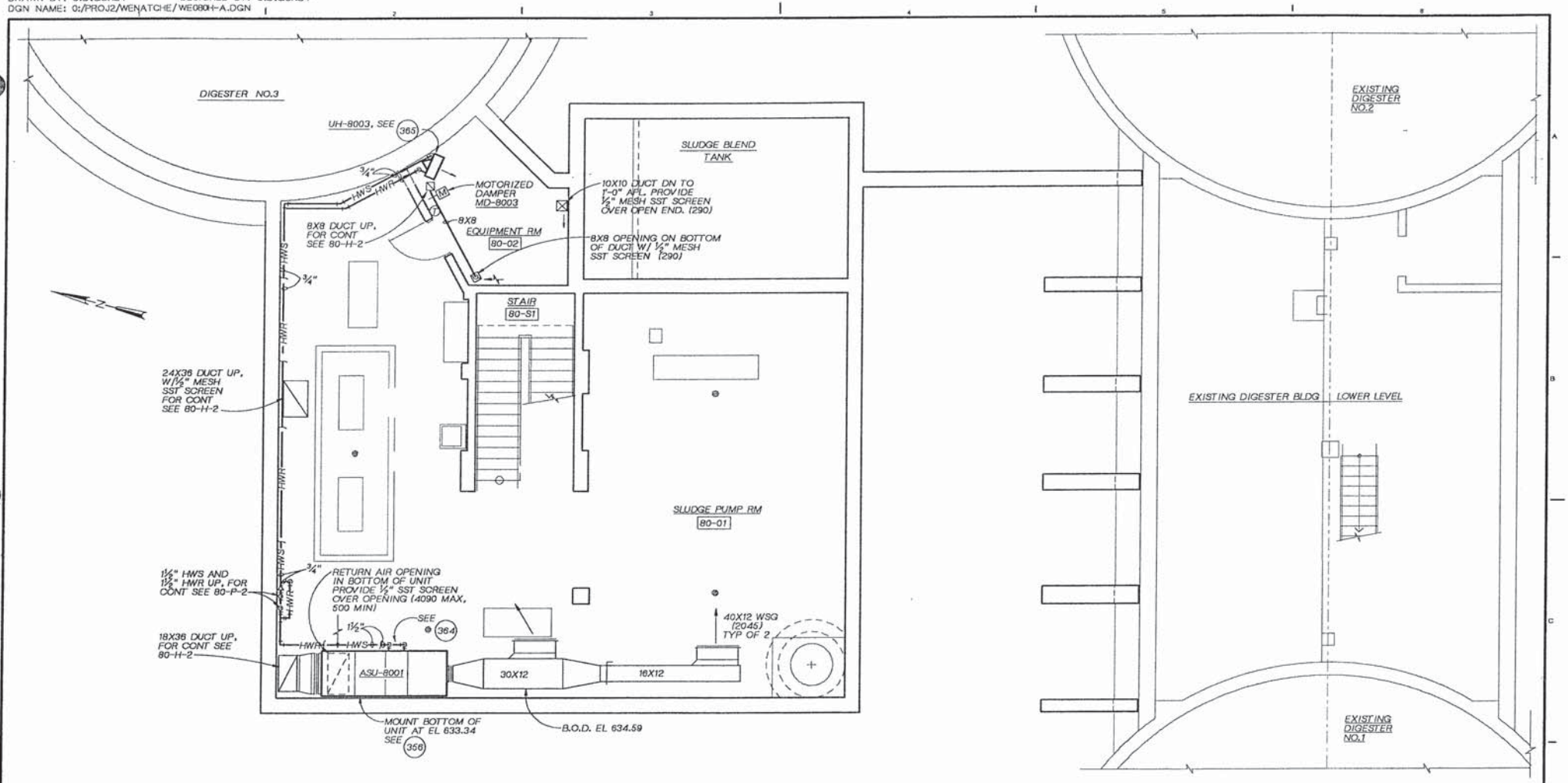

LOWER LEVEL FLOOR PLAN

1/4" =1'- 0"

DSGN	G.SAKAGAWA				
DR	S.D.GUNDY				
CHK	J.SEIMENS				
APVD	K HOOD	NO.	DATE	REVISION	BY	APVD

CH2M HILL

REUSE OF DOCUMENTS
THIS DOCUMENT, AND THE IDEAS AND DESIGNS INCORPORATED HEREIN, AS AN INSTRUMENT OF PROFESSIONAL SERVICE, IS THE PROPERTY OF CH2M HILL AND IS NOT TO BE USED, IN WHOLE OR IN PART, FOR ANY OTHER PROJECT WITHOUT THE WRITTEN AUTHORIZATION OF CH2M HILL.
©CH2M HILL

BAR IS ONE INCH ON ORIGINAL DRAWING. 0 1"
IF NOT ONE INCH ON THIS SHEET, ADJUST SCALES ACCORDINGLY.

CITY OF WENATCHEE, WASHINGTON
WASTEWATER TREATMENT PLANT IMPROVEMENTS

SOLIDS HANDLING FACILITY
LOWER LEVEL
HVAC PLAN

DWG NO. 80-H-1
DATE NOV. 1990
PROJ NO. SEA24579.N1

DATE: 11/5/90
DRAWN BY: S.D.GUNDY DESIGNED BY: S.D.GUNDY
DGN NAME: O:/PROJ2/WENATCHE/WE080H-8.DGN

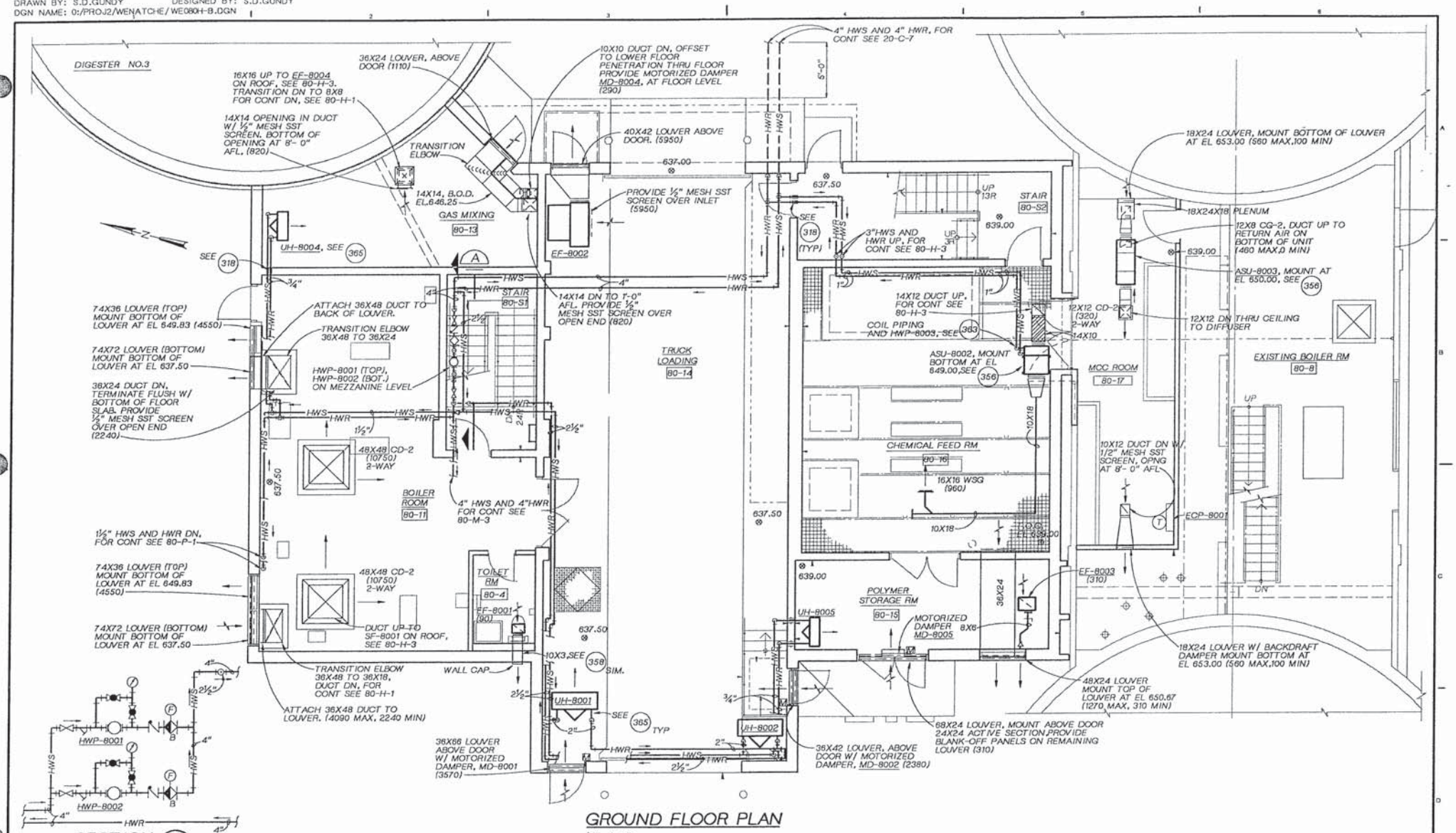

DSGN G.SAKAGAWA					
DR S.D.GUNDY					
CHK J.SIEMENS					
APVD K HOOD	NO.	DATE	REVISION	BY	APVD

CH2M HILL

REUSE OF DOCUMENTS
THIS DOCUMENT, AND THE IDEAS AND DESIGNS INCORPORATED HEREIN, AS AN INSTRUMENT OF PROFESSIONAL SERVICE, IS THE PROPERTY OF CH2M HILL AND IS NOT TO BE USED, IN WHOLE OR IN PART, FOR ANY OTHER PROJECT WITHOUT THE WRITTEN AUTHORIZATION OF CH2M HILL.
©CH2M HILL

BAR IS ONE INCH ON ORIGINAL DRAWING.
0 1"
IF NOT ONE INCH ON THIS SHEET, ADJUST SCALES ACCORDINGLY.

CITY OF WENATCHEE, WASHINGTON
WASTEWATER TREATMENT PLANT IMPROVEMENTS

SOLIDS HANDLING FACILITY
GROUND LEVEL
HVAC PLAN

DWG NO. 80-H-2
DATE NOV. 1990
PROJ NO. SEA24579.N1

DATE: 11/2/90 DM
DRAWN BY: S.D.GUNDY DESIGNED BY: S.D.GUNDY
DGN NAME: O:/PROJ2/WENATCHE/WE080H-C.DGN

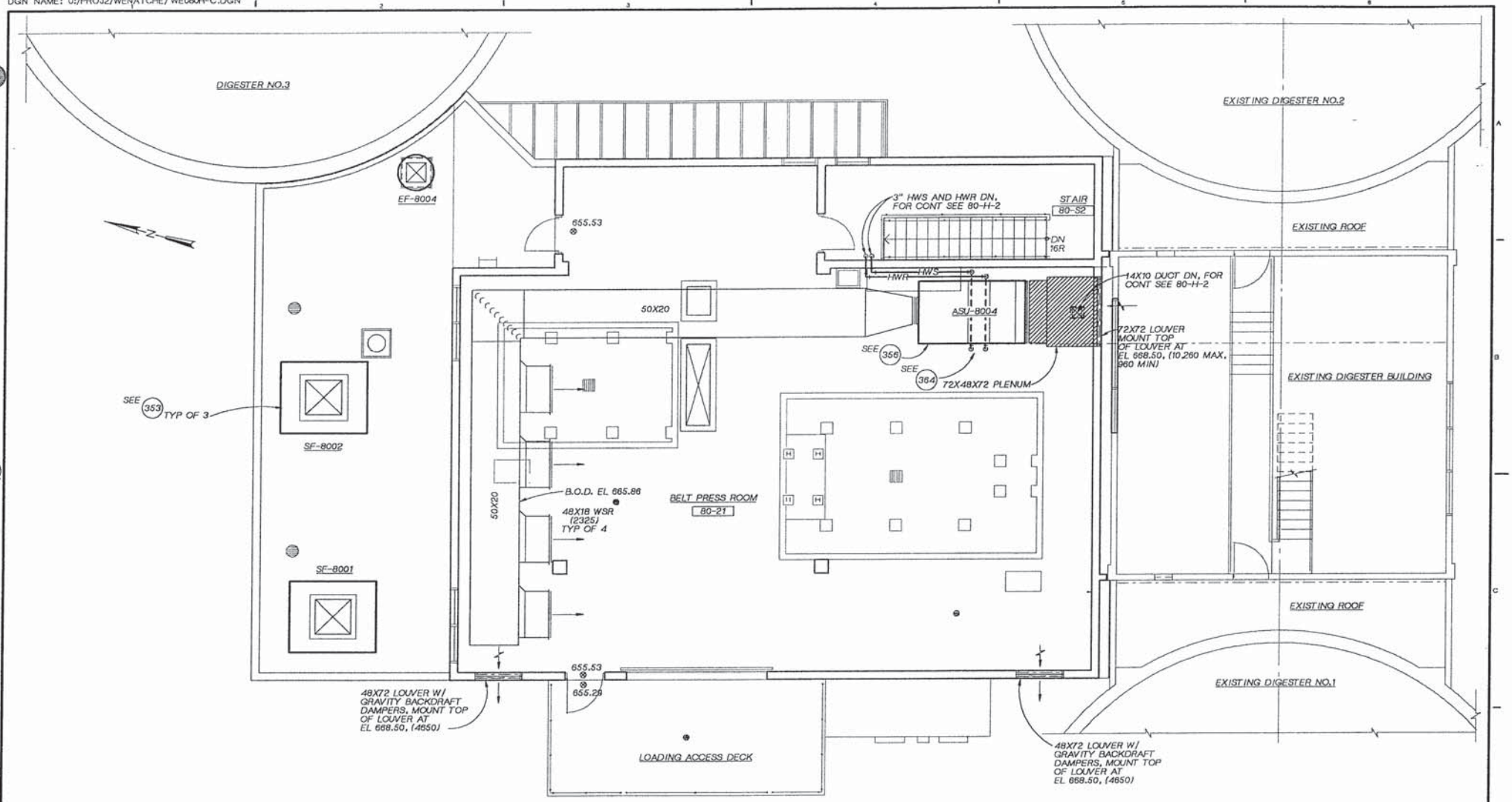

UPPER FLOOR PLAN

1/4"=1'-0"

CH2M HILL	DSGN G.SAKAGAWA					
	DR S.D.GUNDY					
	CHK J.SEIMENS					
	APVD K HOOD	NO.	DATE	REVISION	BY	APVD

REUSE OF DOCUMENTS
THIS DOCUMENT, AND THE IDEAS AND DESIGNS INCORPORATED HEREIN, AS AN INSTRUMENT OF PROFESSIONAL SERVICE, IS THE PROPERTY OF CH2M HILL AND IS NOT TO BE USED, IN WHOLE OR IN PART, FOR ANY OTHER PROJECT WITHOUT THE WRITTEN AUTHORIZATION OF CH2M HILL.
©CH2M HILL

BAR IS ONE INCH ON ORIGINAL DRAWING.
0 1"
IF NOT ONE INCH ON THIS SHEET, ADJUST SCALES ACCORDINGLY.

CITY OF WENATCHEE, WASHINGTON
WASTEWATER TREATMENT PLANT IMPROVEMENTS

SOLIDS HANDLING FACILITY
UPPER LEVEL
HVAC PLAN

DWG NO. 80-H-3
DATE NOV. 1990
PROJ. NO. SEA24579.N1

DATE: 11-05-90
DRAWN BY: TW MCINTYRE DESIGNED BY: JO HANSEN
DGN NAME: 0:/PROJ2/WENATCHE/WE090A-A.DGN

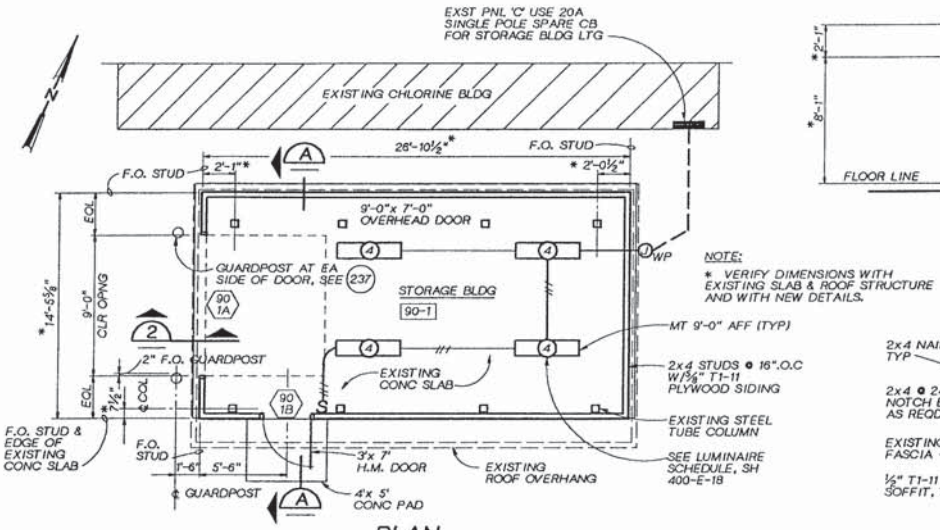

NOTE:
* VERIFY DIMENSIONS WITH EXISTING SLAB & ROOF STRUCTURE AND WITH NEW DETAILS.

PLAN
¼"=1'-0"

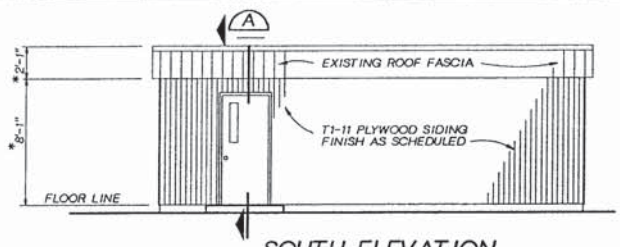

SOUTH ELEVATION
¼"=1'-0"

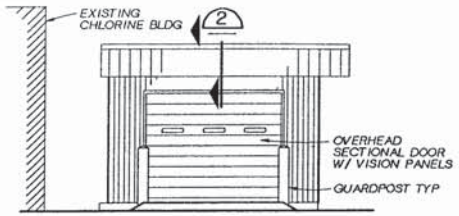

WEST ELEVATION
¼"=1'-0"

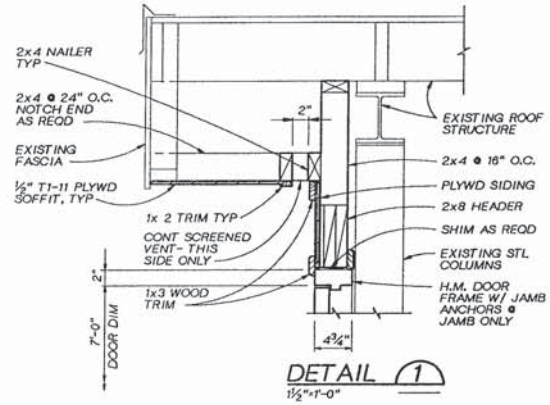

DETAIL 1
1½"=1'-0"

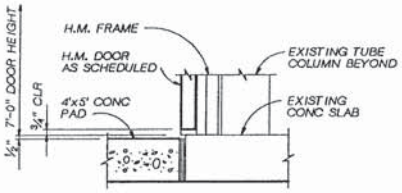

DETAIL 3
1½"=1'-0"

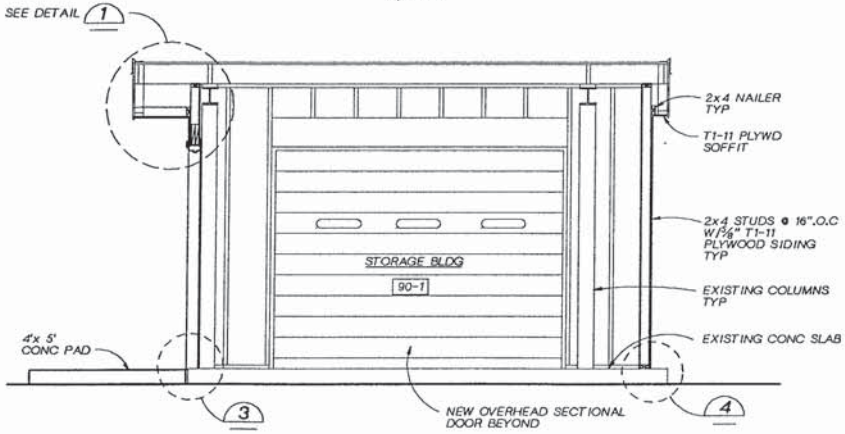

SECTION A
½"=1'-0"

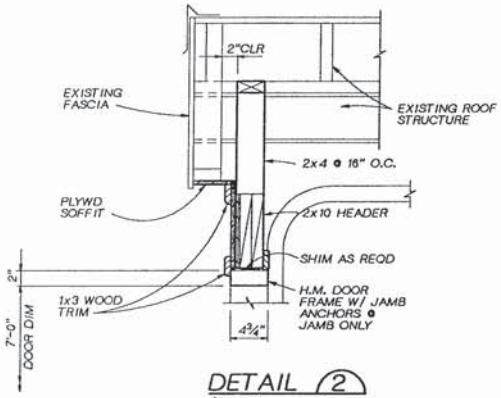

DETAIL 2
1½"=1'-0"

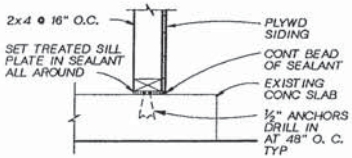

DETAIL 4
1½"=1'-0"

REGISTERED ARCHITECT 3946 JOHN O. HANSEN STATE OF WASHINGTON

CH2M HILL

DSGN	JO HANSEN
DR	TW MCINTYRE
CHK	C FILANOWICZ
APVD	K HOOD

NO.	DATE	REVISION	BY	APVD

REUSE OF DOCUMENTS
THIS DOCUMENT, AND THE IDEAS AND DESIGNS INCORPORATED HEREIN, AS AN INSTRUMENT OF PROFESSIONAL SERVICE, IS THE PROPERTY OF CH2M HILL AND IS NOT TO BE USED, IN WHOLE OR IN PART, FOR ANY OTHER PROJECT WITHOUT THE WRITTEN AUTHORIZATION OF CH2M HILL.
©CH2M HILL

BAR IS ONE INCH ON ORIGINAL DRAWING.
0 1"
IF NOT ONE INCH ON THIS SHEET, ADJUST SCALES ACCORDINGLY.

CITY OF WENATCHEE, WASHINGTON
WASTEWATER TREATMENT PLANT IMPROVEMENTS

COVERED STORAGE BUILDING - MODIFICATIONS
ARCHITECTURAL
PLAN, SECTION, AND DETAILS

DWG NO. 90-A-1
DATE NOV. 1990
PROJ NO. SEA24579.N1

DATE: 11-6-90
DRAWN BY: O A FRIAL DESIGNED BY: J O HANSEN
DGN NAME: O:/PROJ2/WENATCHE/WE100A-A.DGN

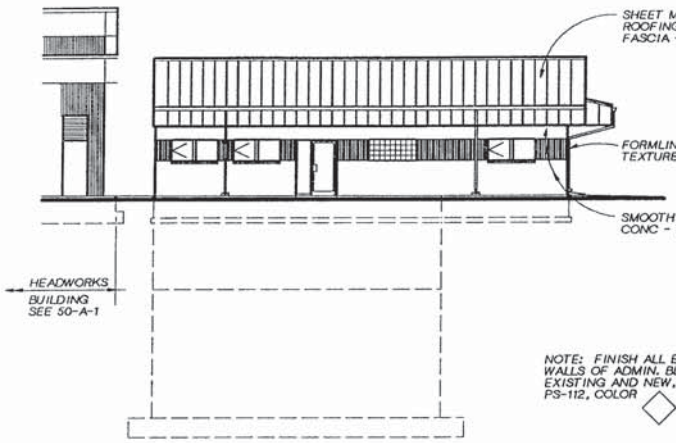

WEST ELEVATION

1/8"= 1'-0"

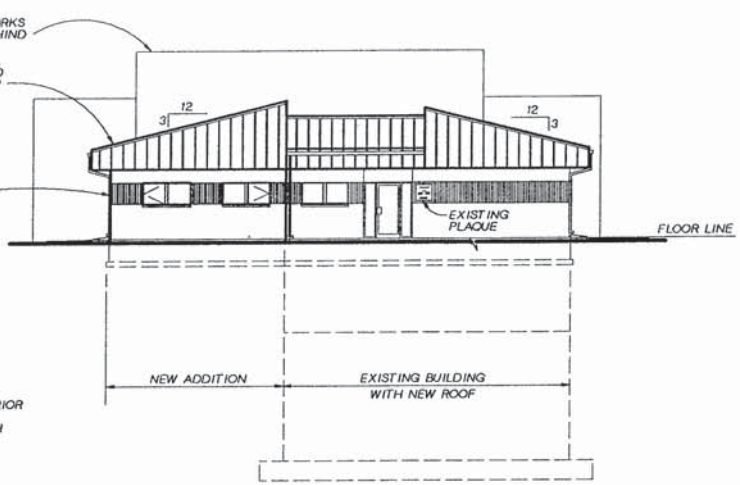

SOUTH ELEVATION

1/8"= 1'-0"

NOTE: FINISH ALL EXTERIOR WALLS OF ADMIN. BLDG., EXISTING AND NEW, WITH PS-112, COLOR ◇

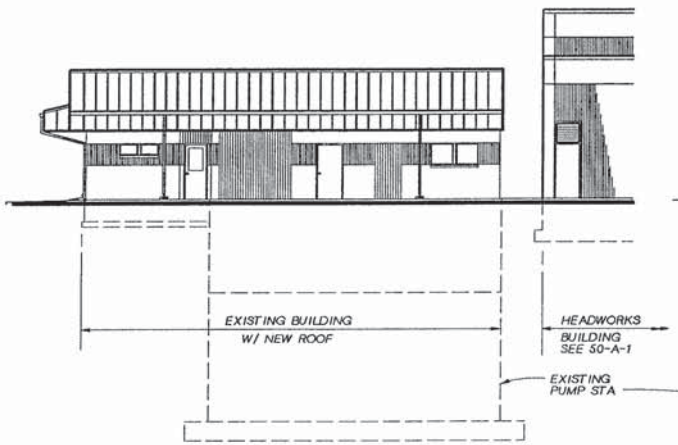

EAST ELEVATION

1/8"= 1'-0"

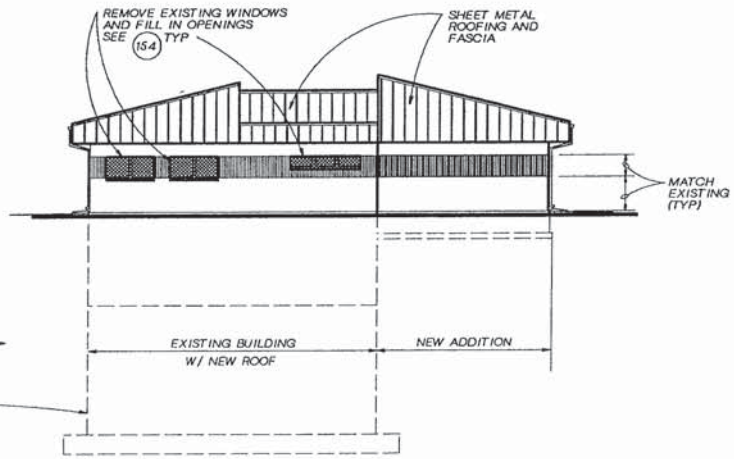

NORTH ELEVATION

1/8"= 1'-0"

WALL TYPES

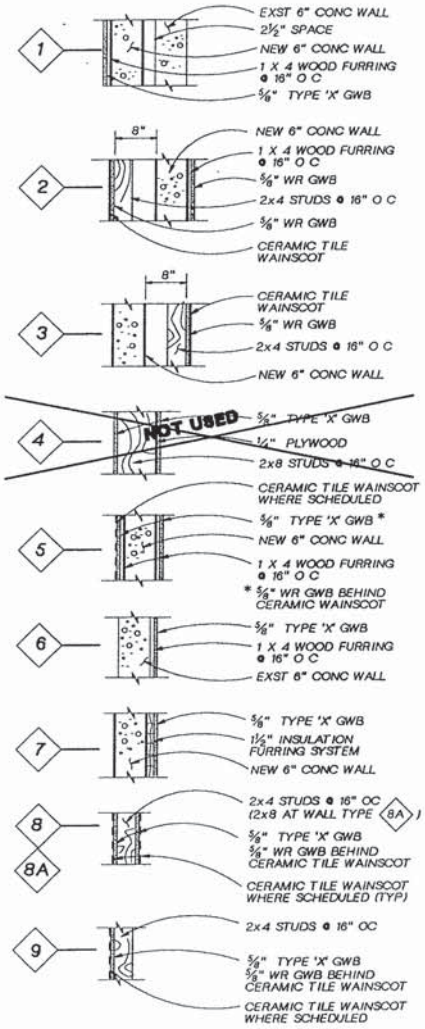

3946 REGISTERED ARCHITECT
JOHN O. HANSEN
STATE OF WASHINGTON

CH2M HILL

DSGN	JO HANSEN
DR	OA FRIAL
CHK	C FILANOWICZ
APVD	K HOOD

NO.	DATE	REVISION	BY	APVD

REUSE OF DOCUMENTS
THIS DOCUMENT, AND THE IDEAS AND DESIGNS INCORPORATED HEREIN, AS AN INSTRUMENT OF PROFESSIONAL SERVICE, IS THE PROPERTY OF CH2M HILL AND IS NOT TO BE USED, IN WHOLE OR IN PART, FOR ANY OTHER PROJECT WITHOUT THE WRITTEN AUTHORIZATION OF CH2M HILL.
©CH2M HILL

BAR IS ONE INCH ON ORIGINAL DRAWING.
0 1"
IF NOT ONE INCH ON THIS SHEET, ADJUST SCALES ACCORDINGLY.

CITY OF WENATCHEE, WASHINGTON
WASTEWATER TREATMENT PLANT IMPROVEMENTS

ADMINISTRATION BUILDING
ARCHITECTURAL ELEVATIONS

DWG NO. 100-A-1
DATE NOV. 1990
PROJ. NO. SEA24579.N1

DATE: 11-6-90
DRAWN BY: O A FRIAL DESIGNED BY: J O HANSEN
DGN NAME: O:/PROJ2/WENATCHE/WE100A-B.DGN

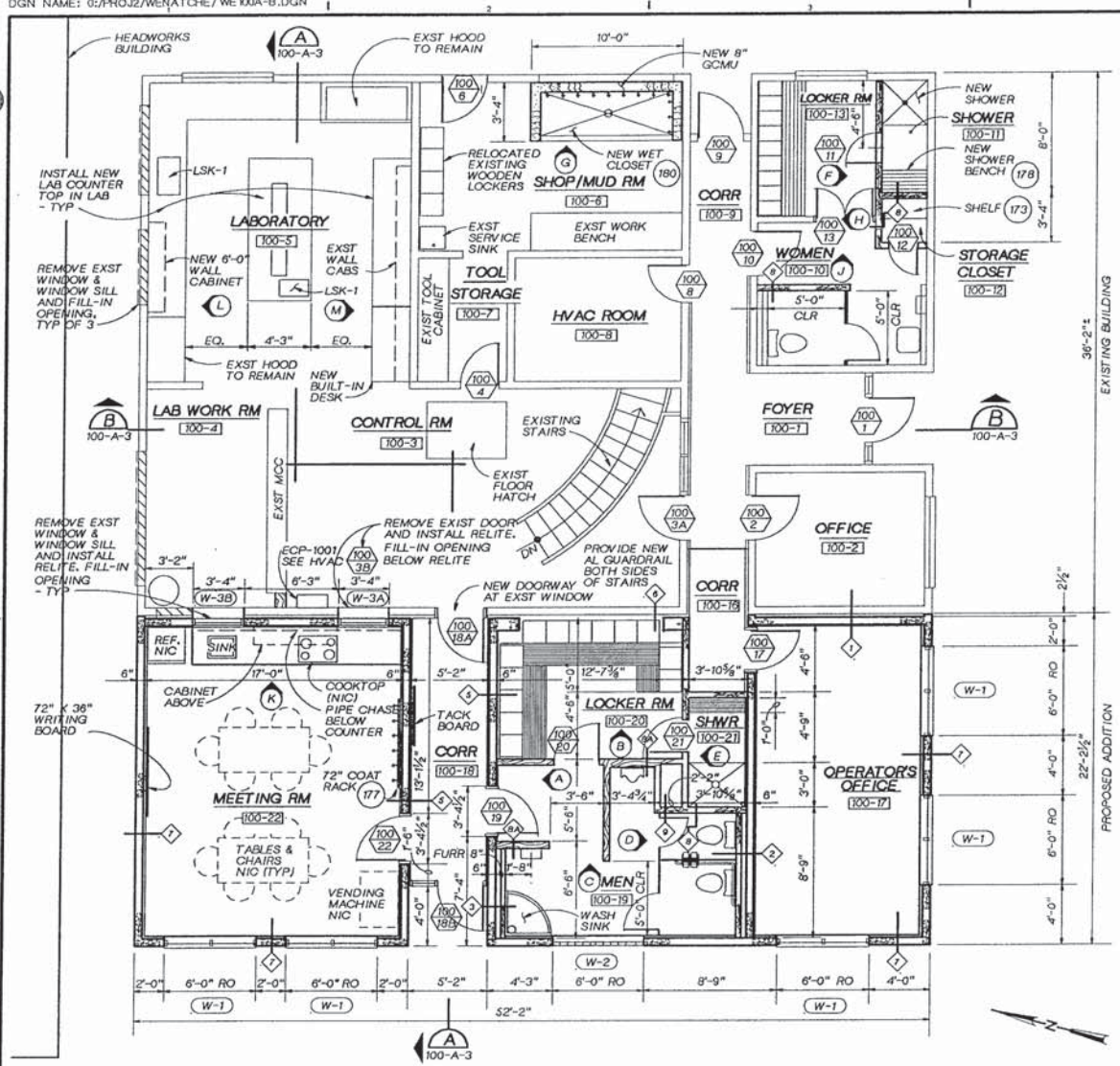

GROUND FLOOR PLAN

¼"=1'-0"

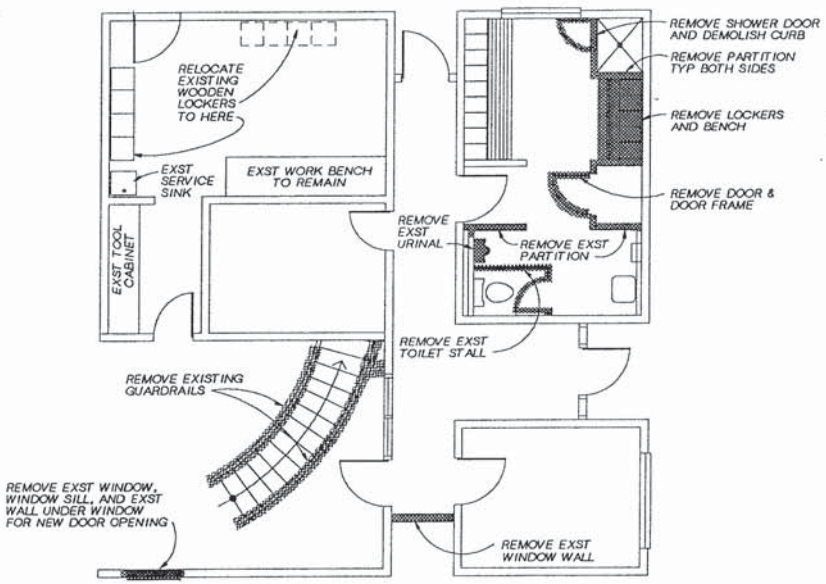

DEMOLITION PLAN (PARTIAL)

¼"=1'-0"

GENERAL NOTES

1. UNLESS OTHERWISE NOTED, PLAN DIMENSIONS ARE TO NOMINAL FACE OF MASONRY, FACE OF STUDS, AND FACE OF CONCRETE.
2. FLOOR LINE REFERS TO TOP OF CONCRETE SLABS AT THE HIGH POINT. FINISH FLOORING IS INSTALLED ABOVE THE FLOOR LINE. FOR DEPRESSED FLOORS, CURBS AND FLOOR SLOPES, SEE STRUCTURAL DRAWINGS.
3. FIGURE DIMENSIONS TAKE PRECEDENCE OVER SCALE DRAWINGS.
4. WHERE DOOR IS LOCATED NEAR CORNER OF ROOM AND IS NOT LOCATED BY DIMENSION, IT SHALL BE 6" FROM FACE OF WALL TO DOOR OPENING.
5. REFER TO STRUCTURAL, MECHANICAL, ELECTRICAL AND OTHER CATEGORIES OF DRAWINGS FOR ADDITIONAL NOTES.
6. WALL TYPES ARE SHOWN ON DWG 100-A-1.
7. INTERIOR ELEVATIONS ARE SHOWN ON DWG 100-A-6.
8. INTERIOR PARTITION HEIGHTS ARE INDICATED ON REFLECTED CEILING PLAN, DWG 100-A-5.
9. FOR DOOR AND HARDWARE SCHEDULE, SEE SECTION 08000 OF THE SPECIFICATIONS.
10. FOR INTERIOR FINISH SCHEDULE AND COLOR LIST, SEE SECTION 09000 OF THE SPECIFICATIONS.
11. FOR ABBREVIATIONS, SEE DWG 10-G-3.
12. FOR MATERIALS LEGEND, SEE DWG 10-G-8.
13. FOR PAINT SYSTEMS (PS-), SEE SPECIFICATIONS SECTION 09900.
14. FOR LOUVER & VENT SCHEDULE AND WINDOW SCHEDULE SEE DWG 250-D-3.

BUILDING CODE NOTES (1988 UBC)

1. TYPE OF OCCUPANCY: B-2
2. TYPE OF CONSTRUCTION: V-N
3. NUMBER OF STORIES: ONE
4. FLOOR AREA:
   - o ALLOWABLE: 11,700
   - o ACTUAL: 3,070
5. NORTH WALL 1-HOUR RATED WITH NO OPENINGS

2946 REGISTERED ARCHITECT JOHN O. HANSEN STATE OF WASHINGTON

CH2M HILL

DSGN	JO HANSEN
DR	OA FRIAL
CHK	C FILANOWICZ
APVD	K HOOD

NO.	DATE	REVISION	BY	APVD

REUSE OF DOCUMENTS
THIS DOCUMENT, AND THE IDEAS AND DESIGNS INCORPORATED HEREIN, AS AN INSTRUMENT OF PROFESSIONAL SERVICE, IS THE PROPERTY OF CH2M HILL AND IS NOT TO BE USED, IN WHOLE OR IN PART, FOR ANY OTHER PROJECT WITHOUT THE WRITTEN AUTHORIZATION OF CH2M HILL.
©CH2M HILL

BAR IS ONE INCH ON ORIGINAL DRAWING. 0 1" IF NOT ONE INCH ON THIS SHEET, ADJUST SCALES ACCORDINGLY.

CITY OF WENATCHEE, WASHINGTON
WASTEWATER TREATMENT PLANT IMPROVEMENTS

ADMINISTRATION BUILDING
ARCHITECTURAL
FLOOR PLAN AND DETAILS

DWG NO. 100-A-2
DATE NOV. 1990
PROJ. NO. SEA24579.N1

DATE: 11-05-90 DLC
DRAWN BY: O A FRIAL DESIGNED BY: J.O. HANSEN
DGN NAME: O:/PROJ2/WENATCHE/WE100A-C.DGN

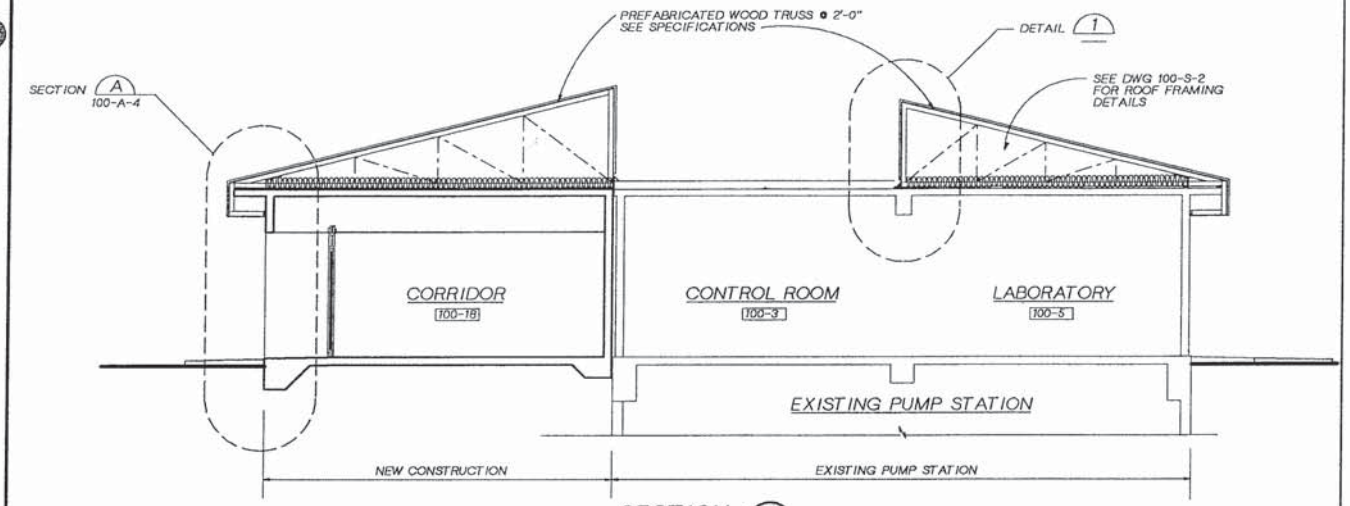

SECTION A
1/4" = 1'-0" 100-A-2

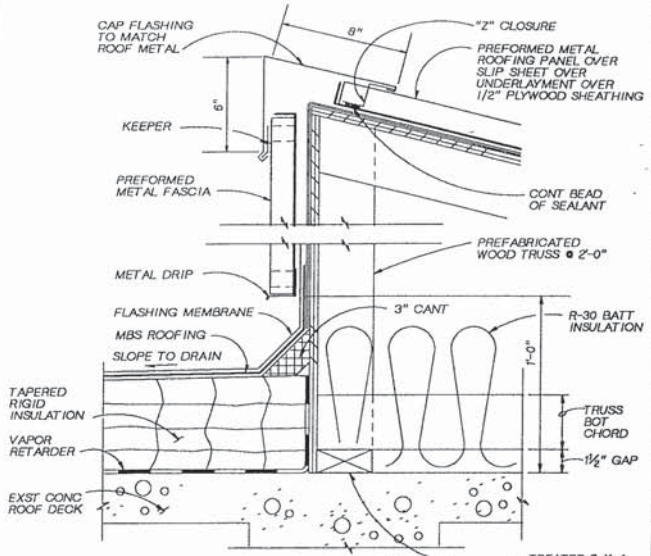

DETAIL 1
3" = 1'-0"

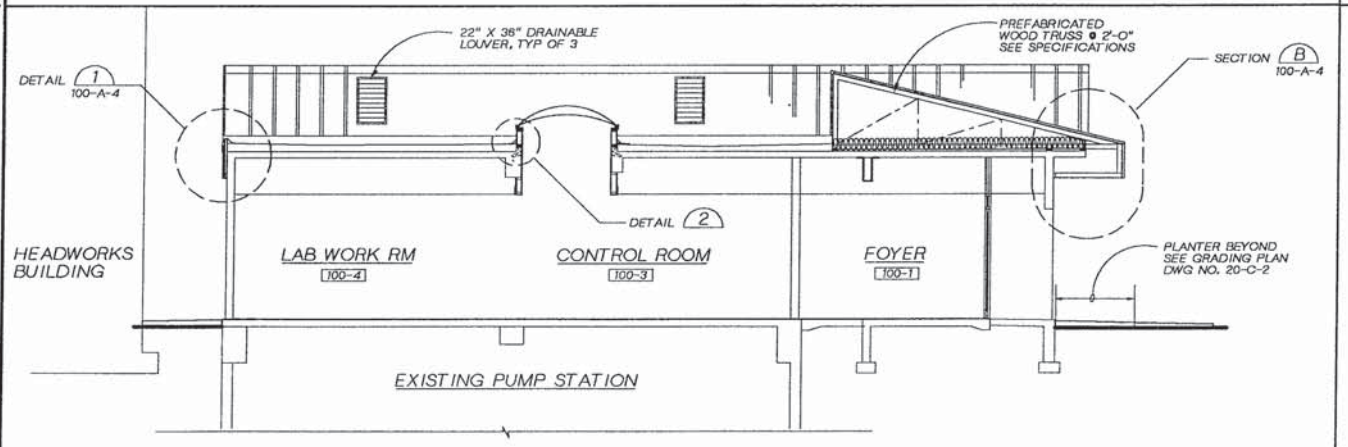

SECTION B
1/4" = 1'-0" 100-A-2

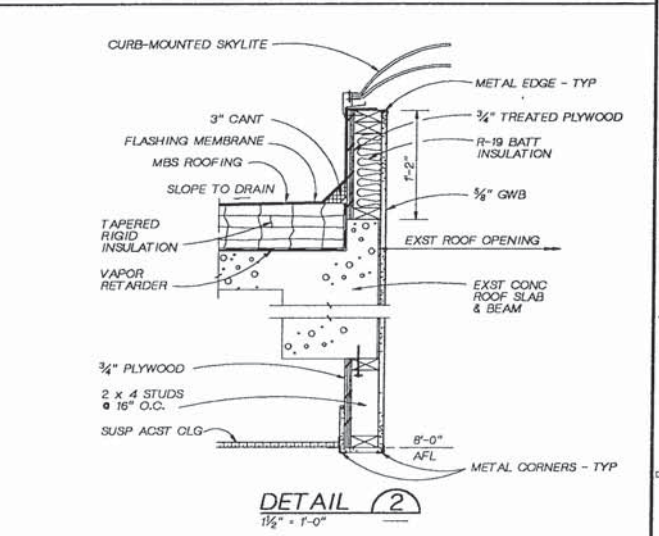

DETAIL 2
1 1/2" = 1'-0"

REGISTERED ARCHITECT 3946 JOHN O. HANSEN STATE OF WASHINGTON

CH2M HILL

DSGN	J.O. HANSEN
DR	O.A.FRIAL
CHK	C.FILANOWICZ
APVD	K HOOD

NO.	DATE	REVISION	BY	APVD

REUSE OF DOCUMENTS
THIS DOCUMENT, AND THE IDEAS AND DESIGNS INCORPORATED HEREIN, AS AN INSTRUMENT OF PROFESSIONAL SERVICE, IS THE PROPERTY OF CH2M HILL AND IS NOT TO BE USED, IN WHOLE OR IN PART, FOR ANY OTHER PROJECT WITHOUT THE WRITTEN AUTHORIZATION OF CH2M HILL.
©CH2M HILL

BAR IS ONE INCH ON ORIGINAL DRAWING. 0 1 INCH 1"
IF NOT ONE INCH ON THIS SHEET, ADJUST SCALES ACCORDINGLY.

CITY OF WENATCHEE, WASHINGTON
WASTEWATER TREATMENT PLANT IMPROVEMENTS

ADMINISTRATION BUILDING MODIFICATIONS
ARCHITECTURAL
SECTIONS AND DETAILS

DWG NO. 100-A-3
DATE NOV. 1990
PROJ. NO. SEA24579.N1

DATE: 11-06-90 DLC
DRAWN BY: O A FRIAL DESIGNED BY:
DGN NAME: 0:/PROJ2/WENATCHE/WE100A-D.DGN

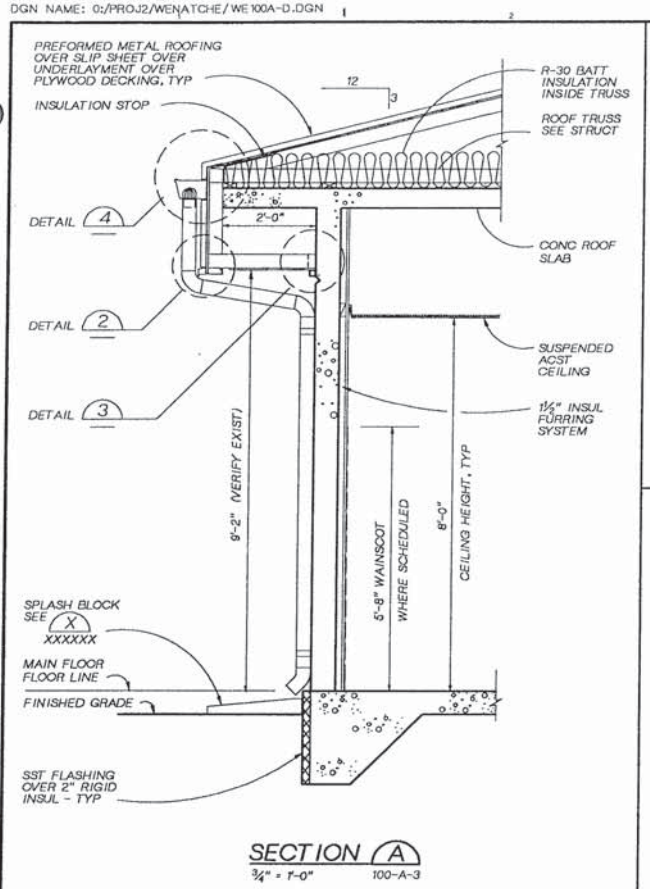

SECTION A
¾" = 1'-0" 100-A-3

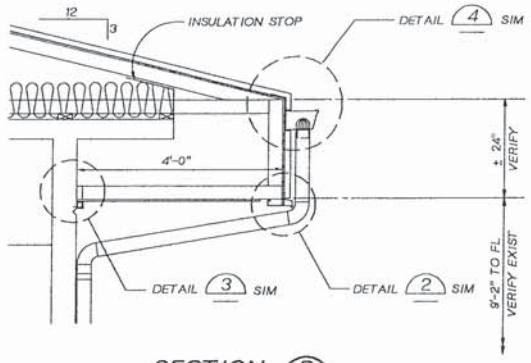

SECTION B
¾" = 1'-0" 100-A-3

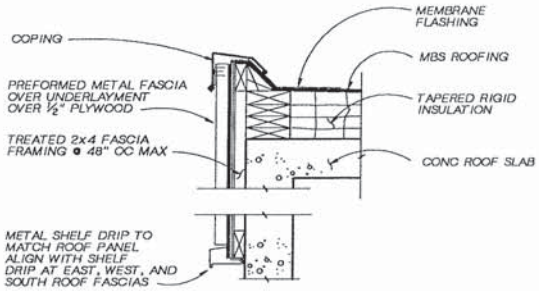

DETAIL 1
1½" = 1'-0" 100-A-3

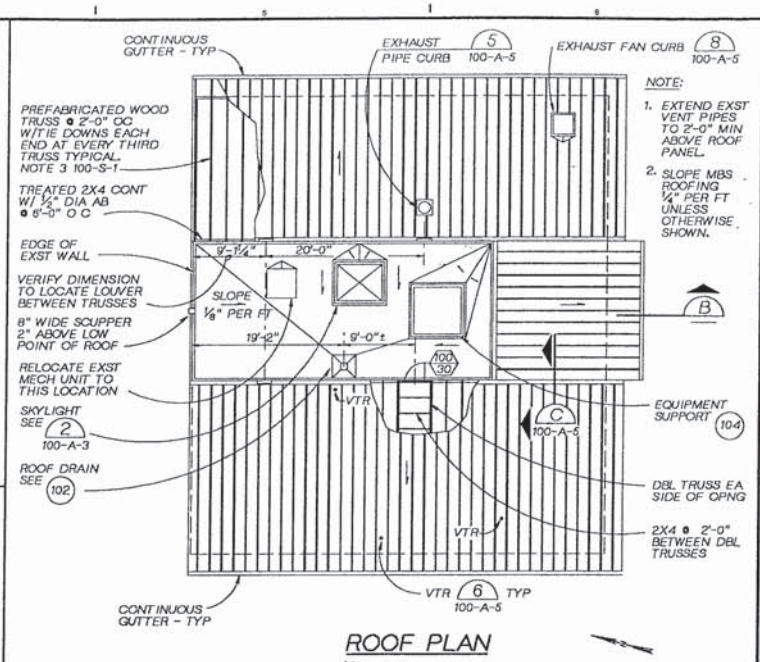

NOTE:
1. EXTEND EXST VENT PIPES TO 2'-0" MIN ABOVE ROOF PANEL.
2. SLOPE MBS ROOFING ¼" PER FT UNLESS OTHERWISE SHOWN.

ROOF PLAN
⅛" = 1'-0"

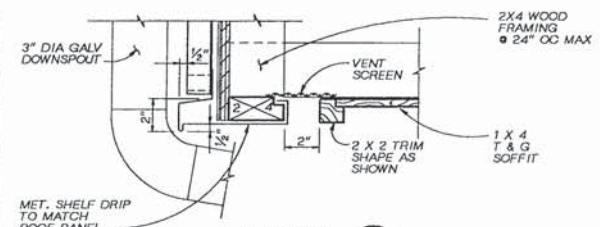

DETAIL 2
3" = 1'-0"

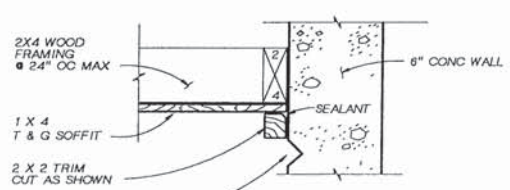

DETAIL 3
3" = 1'-0"

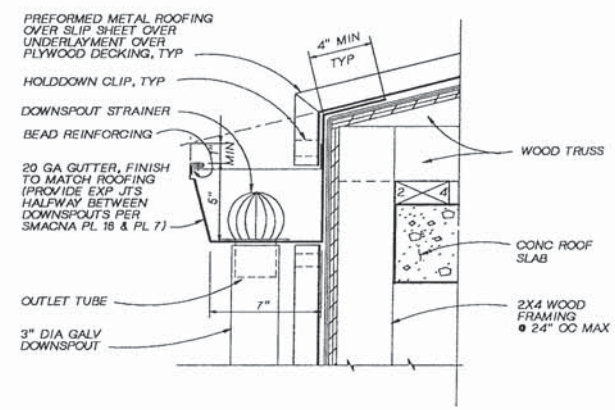

DETAIL 4
3" = 1'-0"

REGISTERED ARCHITECT 3946 JOHN O. HANSEN STATE OF WASHINGTON

CH2M HILL

DSGN	JO HANSEN
DR	OA FRIAL
CHK	C FILANOWICZ
APVD	K HOOD

NO.	DATE	REVISION	BY	APVD

REUSE OF DOCUMENTS
THIS DOCUMENT, AND THE IDEAS AND DESIGNS INCORPORATED HEREIN, AS AN INSTRUMENT OF PROFESSIONAL SERVICE, IS THE PROPERTY OF CH2M HILL AND IS NOT TO BE USED, IN WHOLE OR IN PART, FOR ANY OTHER PROJECT WITHOUT THE WRITTEN AUTHORIZATION OF CH2M HILL.
©CH2M HILL

BAR IS ONE INCH ON ORIGINAL DRAWING.
0 1"
IF NOT ONE INCH ON THIS SHEET, ADJUST SCALES ACCORDINGLY.

CITY OF WENATCHEE, WASHINGTON
WASTEWATER TREATMENT PLANT IMPROVEMENTS

ADMINISTRATION BUILDING
ARCHITECTURAL
ROOF PLAN AND SECTIONS

DWG NO. 100-A-4
DATE NOV. 1990
PROJ. NO. SEA24579.N1

DATE: 11-6-90
DRAWN BY: O A FRIAL DESIGNED BY: O A FRIAL
DGN NAME: O:/PROJ2/WENATCHE/WE100A-E.DGN

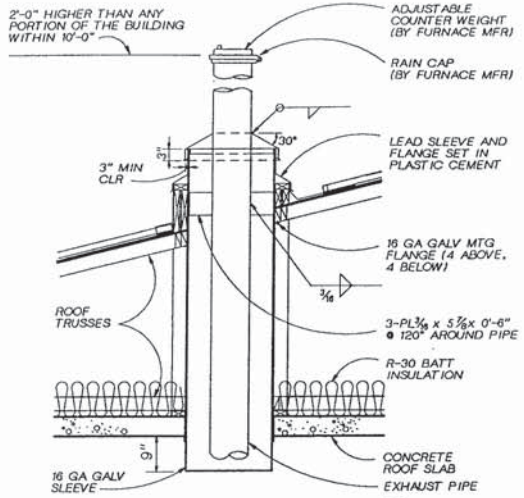

EXHAUST PIPE DETAIL (5)

3/4" = 1'-0" 100-A-4

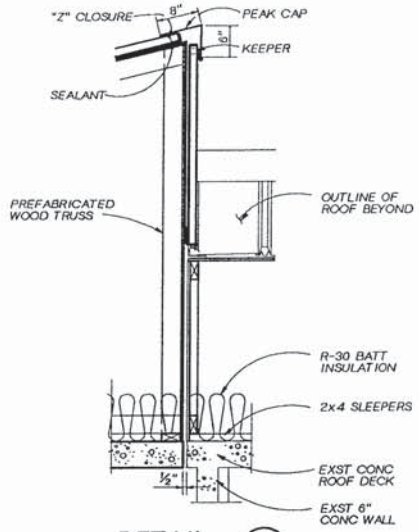

DETAIL (7)

1" = 1'-0" 100-A-4

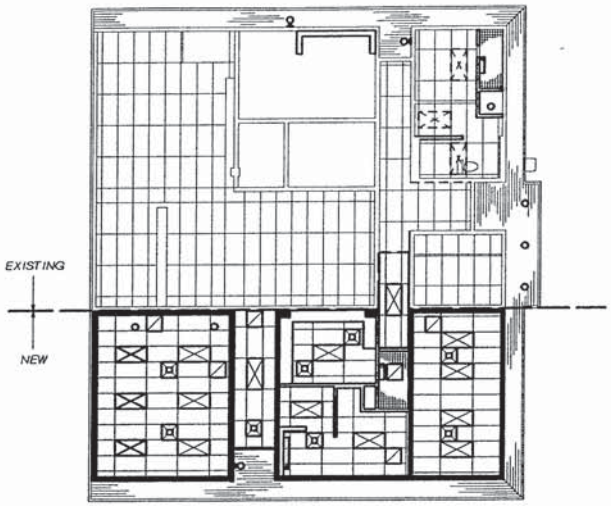

REFLECTED CEILING PLAN

1/8" = 1'-0"

LEGEND

- STRUCTURE AND WALLS UP TO ROOF STRUCTURE
- EXISTING WALLS TO REMAIN
- PARTITION AND FURRING UP TO 6" ABOVE SUSPENDED CEILING
- LAY-IN FLUORESCENT FIXTURE
- WALL MOUNTED FLUORESCENT FIXTURE
- RECESSED INCANDESCENT FIXTURE
- WALL BRACKET DOWNLIGHT FIXTURE
- EXISTING LAY-IN FLUORESCENT FIXTURE
- SUPPLY AIR DIFFUSER
- RETURN AIR GRILLE

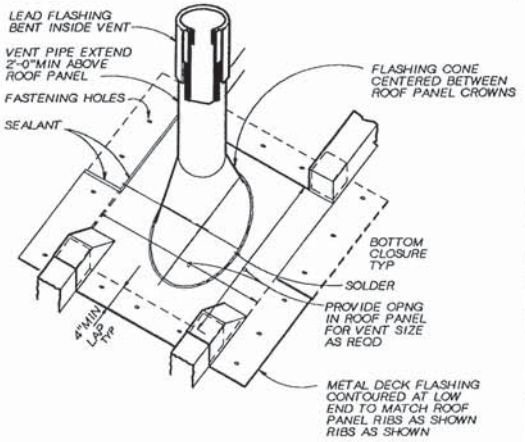

VENT THRU ROOF DETAIL (6)

NTS 100-A-4

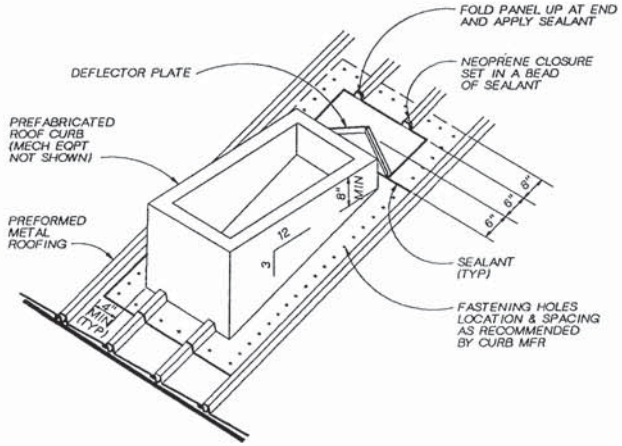

EQUIPMENT CURB DETAIL (8)

NTS 100-A-4

REGISTERED ARCHITECT 1996 JOHN O. HANSEN STATE OF WASHINGTON

CH2M HILL

DSGN	JO HANSEN				
DR	OA FRIAL				
CHKC	FILANOWICZ				
APVD	K HOOD	NO.	DATE	REVISION	BY	APVD

REUSE OF DOCUMENTS
THIS DOCUMENT, AND THE IDEAS AND DESIGNS INCORPORATED HEREIN, AS AN INSTRUMENT OF PROFESSIONAL SERVICE, IS THE PROPERTY OF CH2M HILL AND IS NOT TO BE USED, IN WHOLE OR IN PART, FOR ANY OTHER PROJECT WITHOUT THE WRITTEN AUTHORIZATION OF CH2M HILL.
©CH2M HILL

BAR IS ONE INCH ON ORIGINAL DRAWING. 0 1"
IF NOT ONE INCH ON THIS SHEET, ADJUST SCALES ACCORDINGLY.

CITY OF WENATCHEE, WASHINGTON
WASTEWATER TREATMENT PLANT IMPROVEMENTS

ADMINISTRATION BUILDING
ARCHITECTURAL DETAILS

DWG NO. 100-A-5
DATE NOV. 1990
PROJ NO. SEA24579.N1

DATE: 11-6-90
DRAWN BY: O A FRIAL DESIGNED BY: O A FRIAL
DGN NAME: 0:/PROJ2/WENATCHE/WE100A-F.DGN

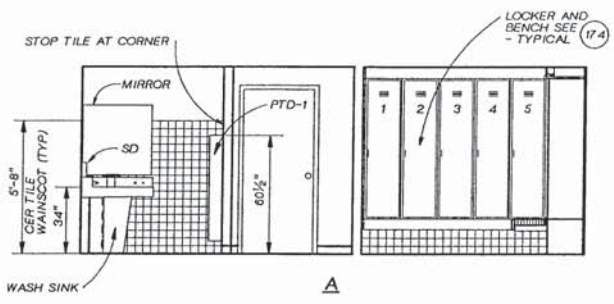

A

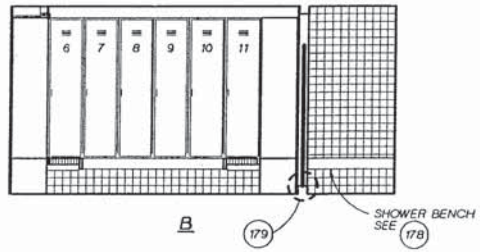

B

MEN 100-19 / LOCKER RM 100-20

3/8" = 1'-0"

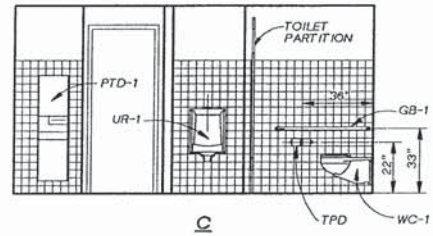

C

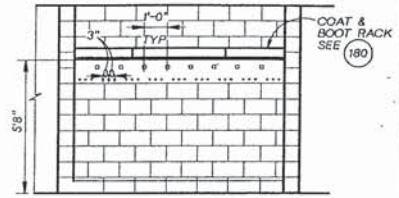

G

MUD ROOM 100-6

3/8" = 1'-0"

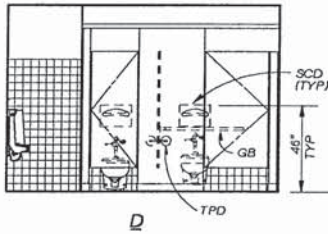

D

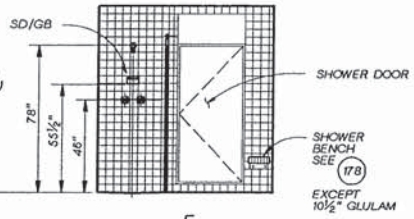

E

MEN 100-19 / SHOWER 100-21

3/8" = 1'-0"

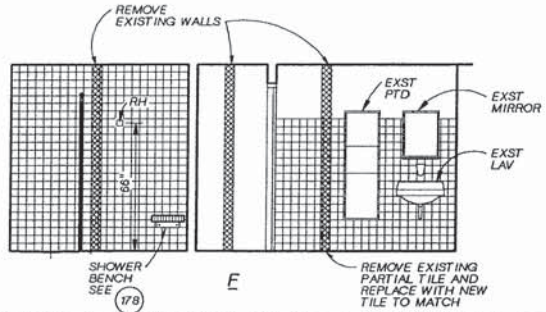

F

SHOWER 100-11 / STOR CLO 100-17 / WOMEN 100-10

3/8" = 1'-0"

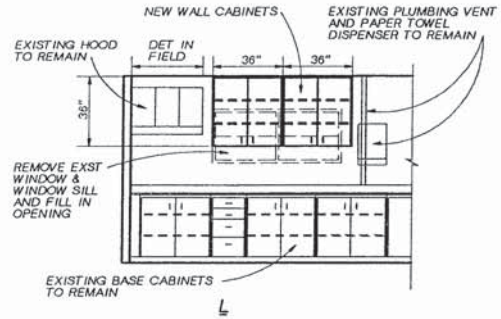

L

LABORATORY 100-5

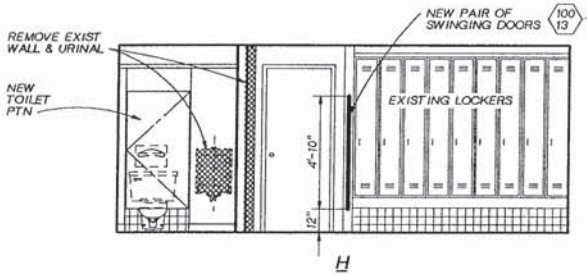

H

WOMEN 100-10 / LOCKER RM 100-13

3/8" = 1'-0"

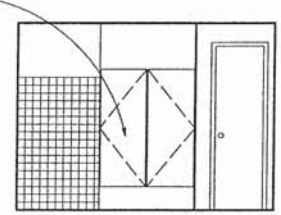

J

WOMEN 100-10

3/8" = 1'-0"

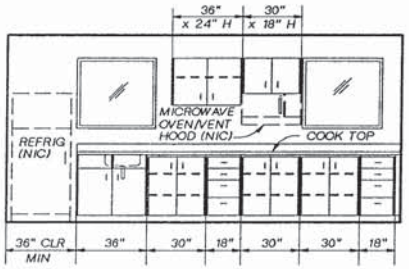

K

MEETING ROOM 100-22

3/8" = 1'-0"

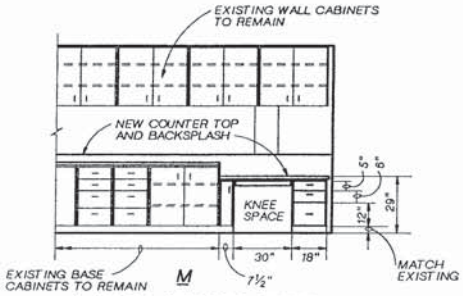

M

LABORATORY 100-5

REGISTERED ARCHITECT 2946 JOHN O. HANSEN STATE OF WASHINGTON

CH2M HILL

DSGN	JO HANSEN
DR	OA FRIAL
CHK	C FILANOWICZ
APVD	K HOOD

NO.	DATE	REVISION	BY	APVD

REUSE OF DOCUMENTS
THIS DOCUMENT, AND THE IDEAS AND DESIGNS INCORPORATED HEREIN, AS AN INSTRUMENT OF PROFESSIONAL SERVICE, IS THE PROPERTY OF CH2M HILL AND IS NOT TO BE USED, IN WHOLE OR IN PART, FOR ANY OTHER PROJECT WITHOUT THE WRITTEN AUTHORIZATION OF CH2M HILL.
©CH2M HILL

BAR IS ONE INCH ON ORIGINAL DRAWING.
0 1"
IF NOT ONE INCH ON THIS SHEET, ADJUST SCALES ACCORDINGLY.

CITY OF WENATCHEE, WASHINGTON
WASTEWATER TREATMENT PLANT IMPROVEMENTS

ADMINISTRATION BUILDING
ARCHITECTURAL INTERIOR ELEVATIONS

DWG NO. 100-A-6
DATE NOV. 1990
PROJ NO. SEA24579.N1

DATE: 11-05-90 DLC
DRAWN BY: M. SPARLING DESIGNED BY: M. HOYRUP
DGN NAME: O:/PROJ2/WENATCHE/WE100S-A.DGN

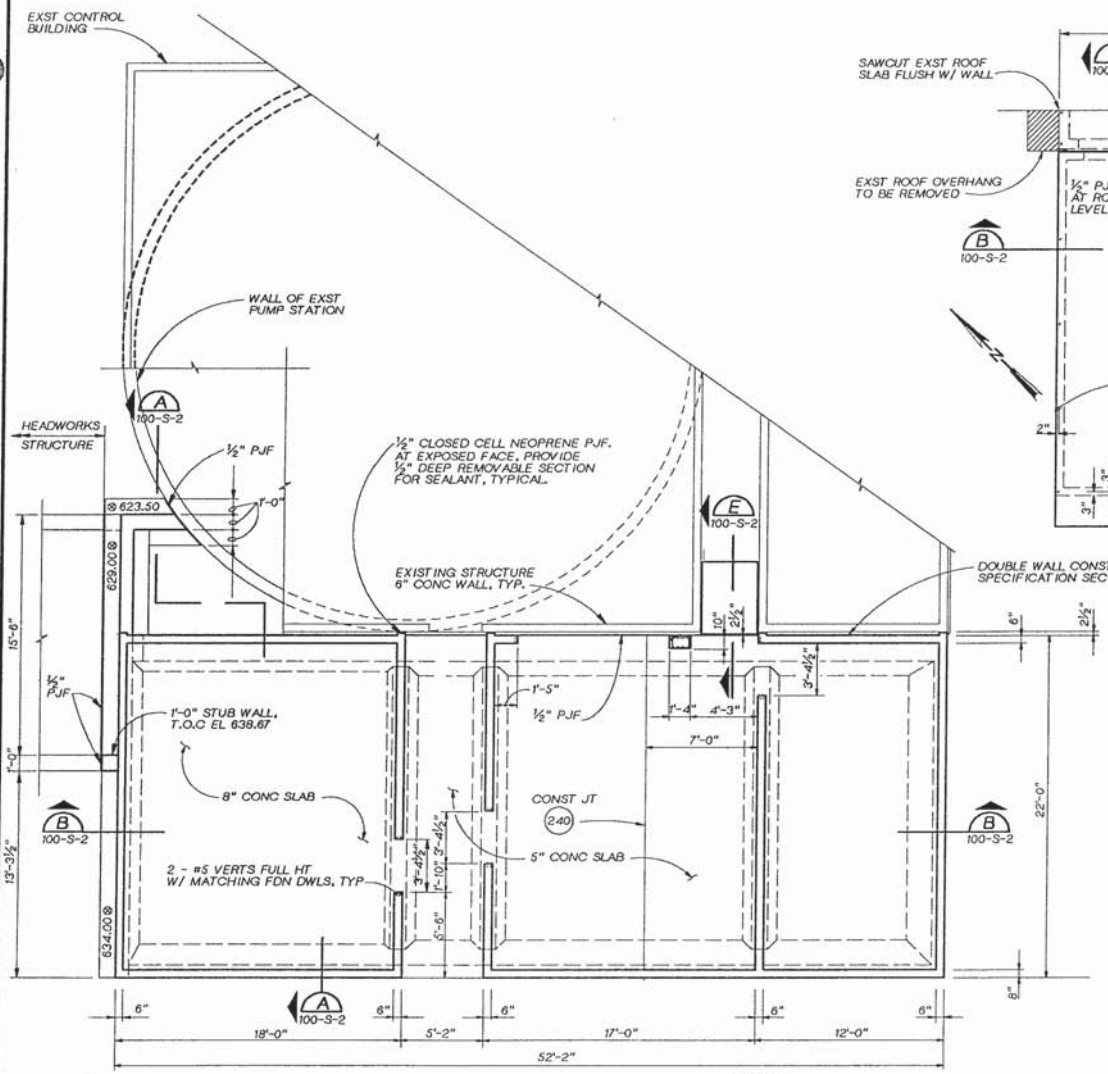

FLOOR AND FOUNDATION PLAN

¼" = 1'-0"

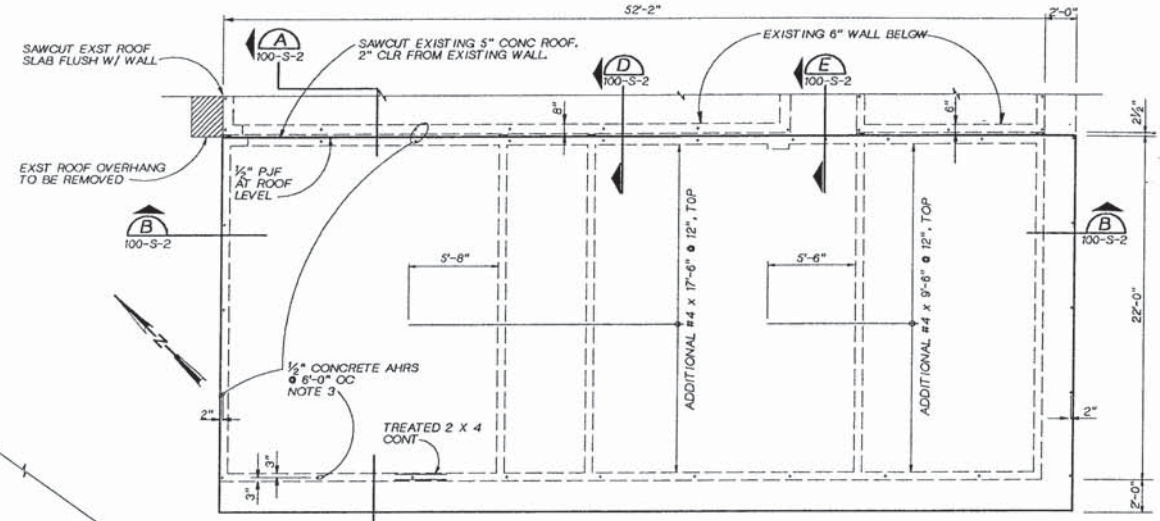

ROOF SLAB PLAN

¼" = 1'-0"

NOTES:

1. PREFABRICATED WOOD TRUSSES (NOT SHOWN) SEE SECTIONS. SNOW LOAD = 30 PSF.
2. CONCRETE ROOF SLAB: LIVE LOAD = 40 PSF.
3. TRUSSES SHALL BEAR ON TREATED 2 X 4 WITH ½" CONCRETE ANCHORS 6'-0" OC 2" FROM EDGE OF CONCRETE U.N.O. USE ½" X 16" ANCHOR BOLTS OR ½" EPOXY ANCHORS W/THREAD PROJECTION TO ACCOMODATE SIMPSON LTT20 TENSION TIE (D) 100-S-2.

ADDITIONAL AHR REQUIRED 6" FROM ENDS OF TREATED 2 X 4. TYPICAL NEW AND EXISITNG ROOF.

NOTES:

1. SEE GENERAL STRUCTURAL NOTES
2. PROVIDE ADDITIONAL REINFORCING AT OPENINGS (INCLUDING DOORS AND WINDOWS).

MONS L. HOYRUP — STATE OF WASHINGTON — PROFESSIONAL ENGINEER

CH2M HILL

DSGN	M. HOYRUP
DR	M. SPARLING
CHK	L. ARAGON
APVD	K. HOOD

NO.	DATE	REVISION	BY	APVD

REUSE OF DOCUMENTS
THIS DOCUMENT, AND THE IDEAS AND DESIGNS INCORPORATED HEREIN, AS AN INSTRUMENT OF PROFESSIONAL SERVICE, IS THE PROPERTY OF CH2M HILL AND IS NOT TO BE USED, IN WHOLE OR IN PART, FOR ANY OTHER PROJECT WITHOUT THE WRITTEN AUTHORIZATION OF CH2M HILL.
© CH2M HILL

BAR IS ONE INCH ON ORIGINAL DRAWING. 0 1" IF NOT ONE INCH ON THIS SHEET, ADJUST SCALES ACCORDINGLY.

CITY OF WENATCHEE, WASHINGTON
WASTEWATER TREATMENT PLANT IMPROVEMENTS

ADMINISTRATION BUILDING MODIFICATIONS
STRUCTURAL
FOUNDATION PLAN AND ROOF PLAN

DWG NO. 100-S-1
DATE NOV. 1990
PROJ. NO. SEA24579.N1

DATE: 11-05-90 DLC
DRAWN BY: M. SPARLING DESIGNED BY: M. HOYRUP
DGN NAME: 0:/PROJ2/WENATCHE/WE100S-B.DGN

NOTE: WOOD TRUSSES NOT SHOWN THIS SECTION.

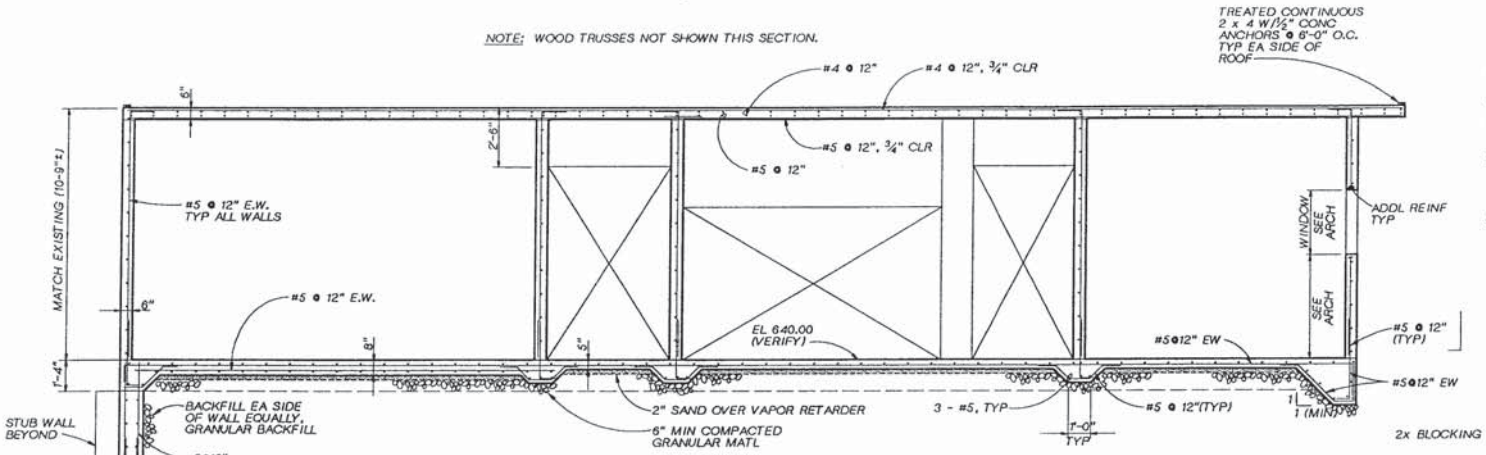

SECTION B
3/8" = 1'-0" 100-S-1

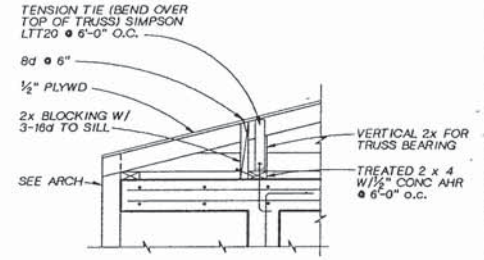

DETAIL 1
1" = 1'-0"

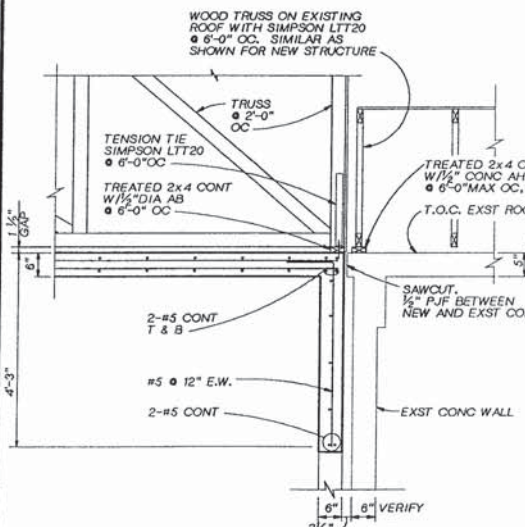

SECTION D
3/4" = 1'-0" 100-S-1, S-2

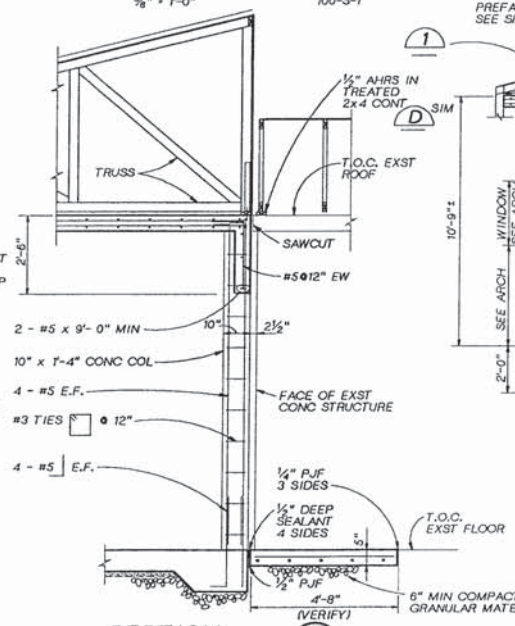

SECTION E
1/2" = 1'-0" 100-S-1

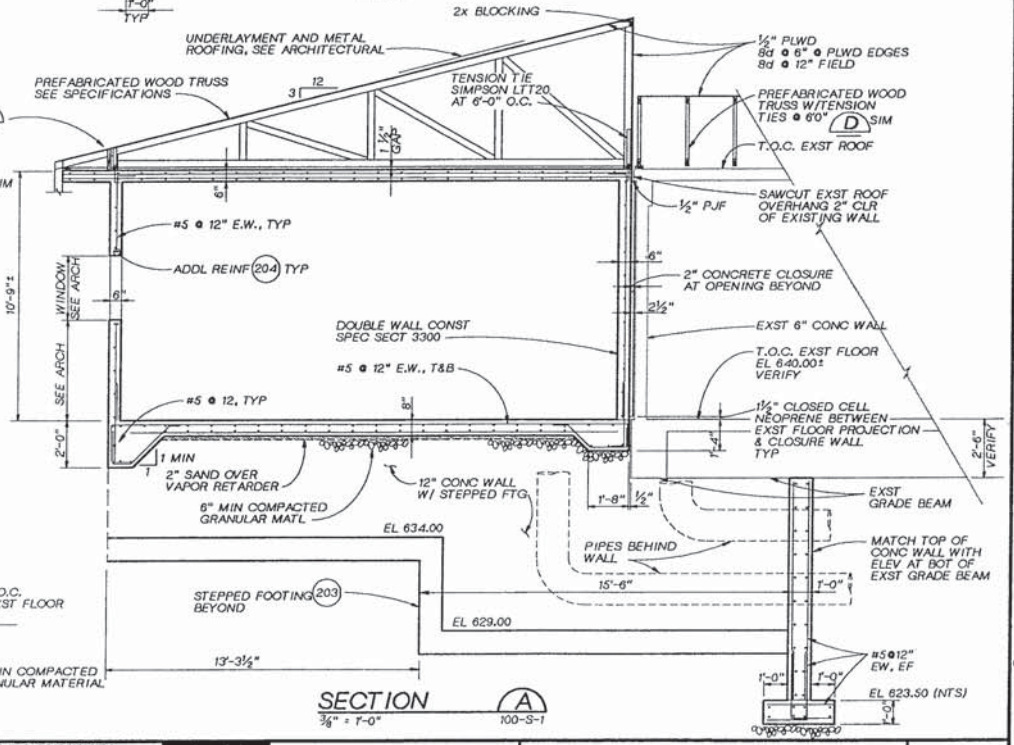

SECTION A
3/8" = 1'-0" 100-S-1

DSGN	M. HOYRUP					
DR	M. SPARLING					
CHK	L. ARAGON					
APVD	K HOOD	NO.	DATE	REVISION	BY	APVD

CKMHILL

REUSE OF DOCUMENTS
THIS DOCUMENT, AND THE IDEAS AND DESIGNS INCORPORATED HEREIN, AS AN INSTRUMENT OF PROFESSIONAL SERVICE, IS THE PROPERTY OF CH2M HILL AND IS NOT TO BE USED, IN WHOLE OR IN PART, FOR ANY OTHER PROJECT WITHOUT THE WRITTEN AUTHORIZATION OF CH2M HILL.
©CH2M HILL

BAR IS ONE INCH ON ORIGINAL DRAWING. 0 1"
IF NOT ONE INCH ON THIS SHEET, ADJUST SCALES ACCORDINGLY.

CITY OF WENATCHEE, WASHINGTON
WASTEWATER TREATMENT PLANT IMPROVEMENTS

ADMINISTRATION BUILDING MODIFICATIONS
SECTIONS AND DETAILS

DWG NO. 100-S-2
DATE NOV. 1990
PROJ. NO. SEA24579.N1

DATE: 11/2/90
DRAWN BY: SD GUNDY DESIGNED BY: SD GUNDY
DGN NAME: O:/PROJ2/WENATCHE/WE100P-A.DGN

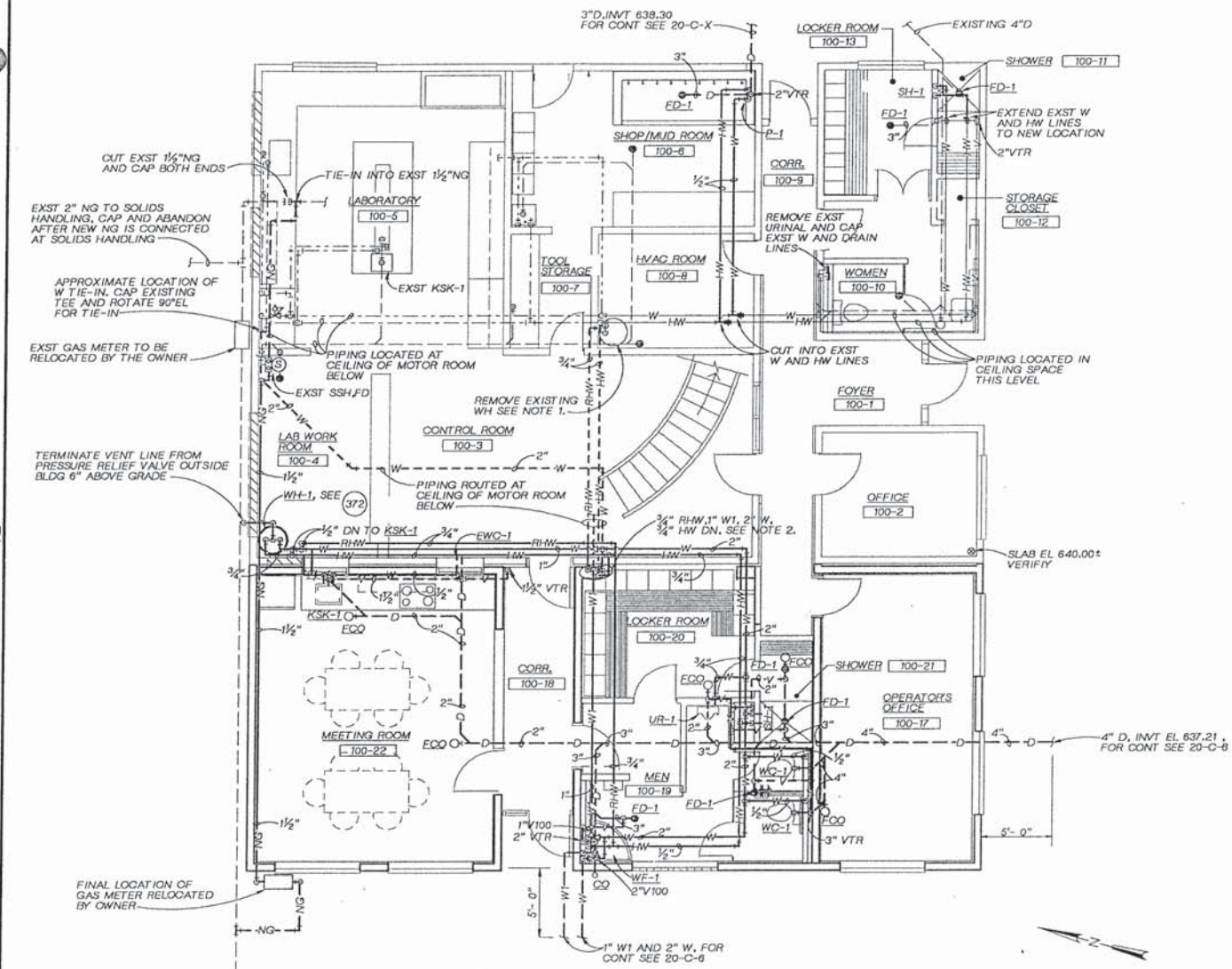

GROUND FLOOR PLAN

¼"=1'-0"

NOTES:

1. TO REMOVE EXISTING WATER HEATER IN FURNACE ROOM, REMOVE EXISTING DUCTWORK AND CAP EXISTING W LINE. TIE-IN NEW HW FROM ADDITION. REINSTALL EXISTING DUCTWORK TO ORIGINAL CONDITION OR BETTER.
2. ROUTE W, HW, RHW AND W1 WATER LINES AS REQUIRED TO TIE IN TO EXISTING PIPING ON MOTOR ROOM FLOOR (BELOW CONTROL ROOM). FIELD VERIFY LOCATION OF TIE IN TO PIPING IN EXISTING BLDG.
3. W1 TO TIE-IN TO EXISTING SEAL WATER SYSTEM ON MOTOR FLOOR (BELOW). FIELD VERIFY LOCATION OF EXST CW PIPING.

CH2M HILL	DSGN S.D.GUNDY				
	DR S.D.GUNDY				
	CHK J.W.REGER				
	APVD K HOOD	NO.	DATE	REVISION	BY / APVD

REUSE OF DOCUMENTS
THIS DOCUMENT, AND THE IDEAS AND DESIGNS INCORPORATED HEREIN, AS AN INSTRUMENT OF PROFESSIONAL SERVICE, IS THE PROPERTY OF CH2M HILL AND IS NOT TO BE USED, IN WHOLE OR IN PART, FOR ANY OTHER PROJECT WITHOUT THE WRITTEN AUTHORIZATION OF CH2M HILL.
©CH2M HILL

BAR IS ONE INCH ON ORIGINAL DRAWING. 0 1" IF NOT ONE INCH ON THIS SHEET, ADJUST SCALES ACCORDINGLY.

CITY OF WENATCHEE, WASHINGTON
WASTEWATER TREATMENT PLANT IMPROVEMENTS

ADMINISTRATION BUILDING MODIFICATIONS
PLUMBING PLAN AND DETAILS

DWG NO. 100-P-1
DATE NOV. 1990
PROJ NO. SEA24579.N1

DATE: 11/5/90
DRAWN BY: S.D.GUNDY DESIGNED BY: S.D.GUNDY
DGN NAME: 0:/PROJ2/WENATCHE/WE100H-A.DGN

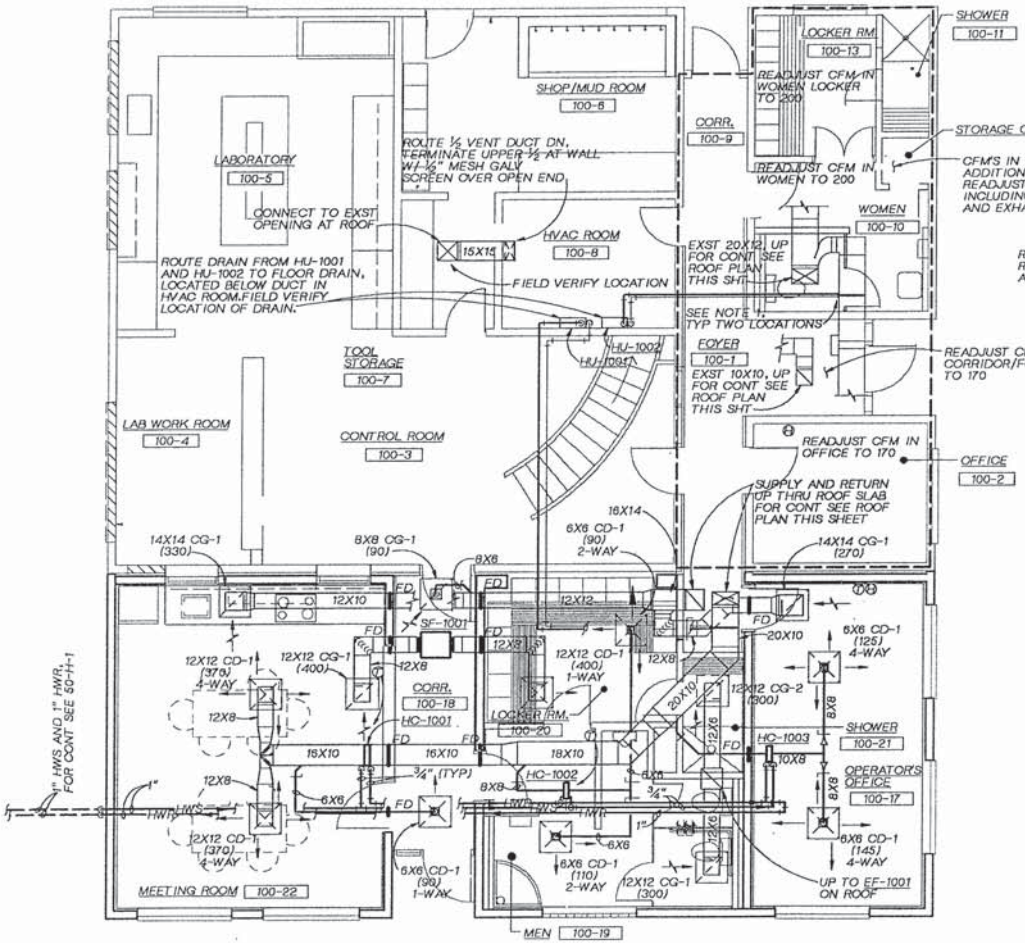

FLOOR PLAN

1/4"=1'- 0"

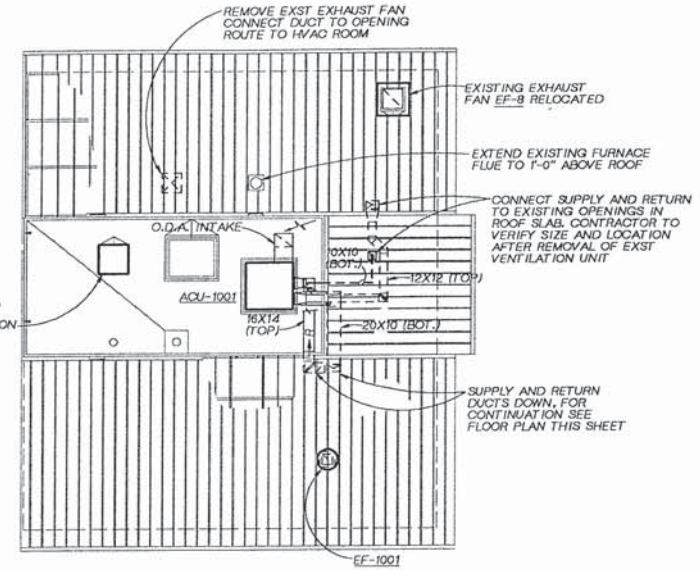

ROOF PLAN

1/8"=1'- 0"

NOTES:

1. DRAIN FROM DISTRIBUTER TUBE SHOULD BE CONNECTED TO CONDENSATE RETURN DRAIN FROM HOSE

DSGN	S.D.GUNDY				
DR	S.D.GUNDY				
CHK	J.SEIMENS				
APVD	K HOOD	NO.	DATE	REVISION	BY / APVD

CH2M HILL

REUSE OF DOCUMENTS
THIS DOCUMENT, AND THE IDEAS AND DESIGNS INCORPORATED HEREIN, AS AN INSTRUMENT OF PROFESSIONAL SERVICE, IS THE PROPERTY OF CH2M HILL AND IS NOT TO BE USED, IN WHOLE OR IN PART, FOR ANY OTHER PROJECT WITHOUT THE WRITTEN AUTHORIZATION OF CH2M HILL.
© CH2M HILL

BAR IS ONE INCH ON ORIGINAL DRAWING. 0 1 2 INCHES
IF NOT ONE INCH ON THIS SHEET, ADJUST SCALES ACCORDINGLY.

CITY OF WENATCHEE, WASHINGTON
WASTEWATER TREATMENT PLANT IMPROVEMENTS

ADMINISTRATION BUILDING MODIFICATIONS
HVAC
PLAN AND DETAILS

DWG NO. 100-H-1
DATE NOV. 1990
PROJ NO. SEA24579.N1

DATE: 11-6-90
DRAWN BY: BB LAZARO DESIGNED BY: J. HANSEN
DGN NAME: O:/PROJ2/WENATCHE/WE2500-A.DGN

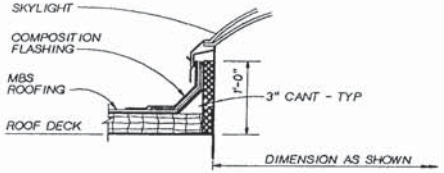

SKYLIGHT CURB (101)
NTS

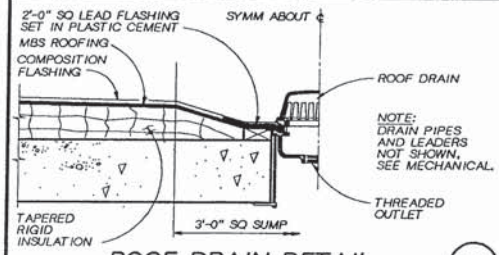

ROOF DRAIN DETAIL (102)
NTS

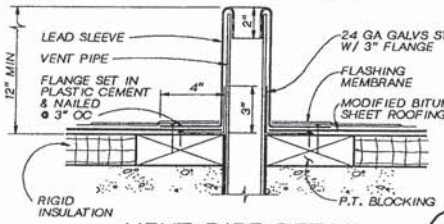

VENT PIPE DETAIL (103)
3"=1'-0"

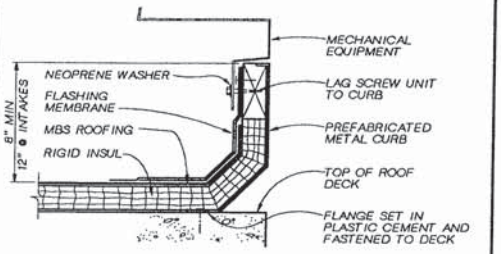

MECH. EQPT CURB DETAIL (104)
3"=1'-0"

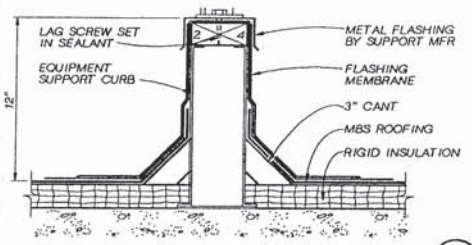

EQUIPMENT SUPPORT DETAIL (105)
3"=1'-0"

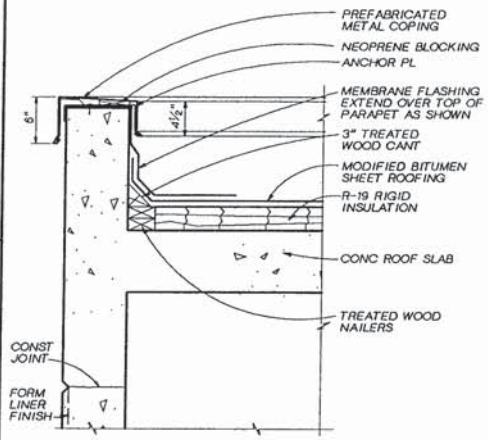

COPING DETAIL (106)
1½" = 1'-0"

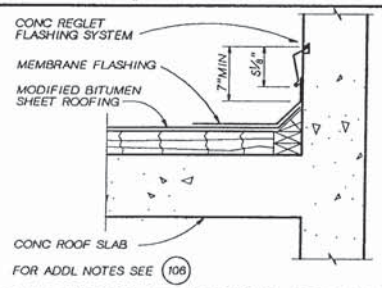

RAKE WALL FLASHING DETAIL (107)
1½" = 1'-0"

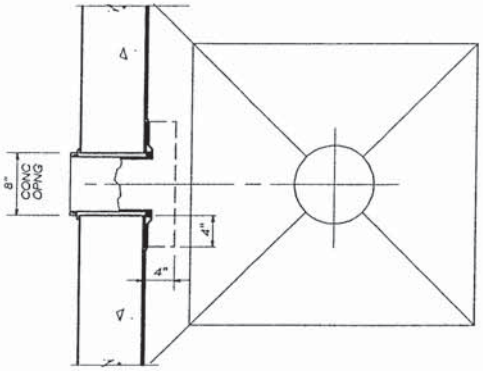

PLAN

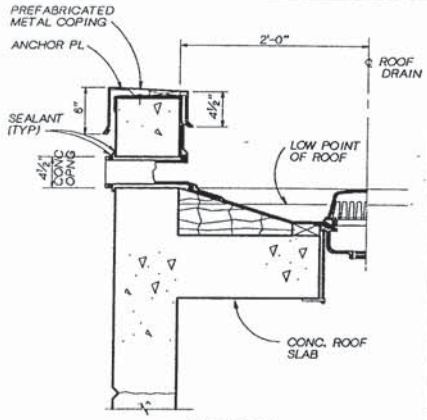

SECTION

SCUPPER DETAIL (108)
1½" = 1'-0"

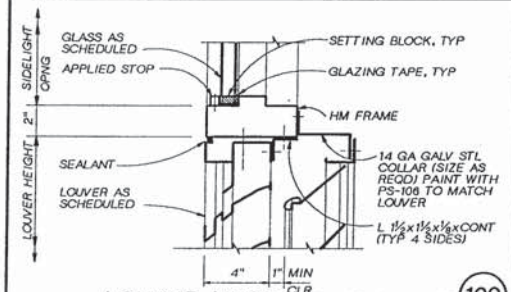

LOUVER HEAD (JAMB SIMILAR) (109)
3" = 1'-0"

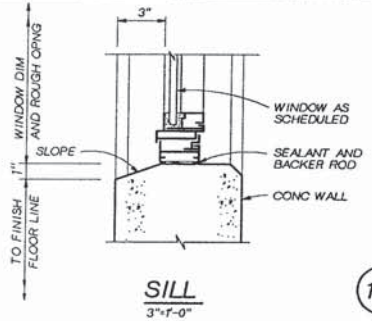

SILL (111)
3"=1'-0"

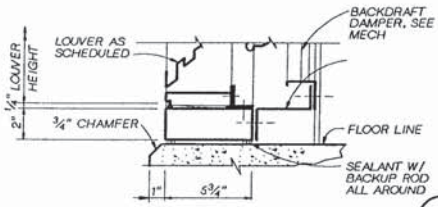

LOUVER DETAIL (110)
3" = 1'-0"

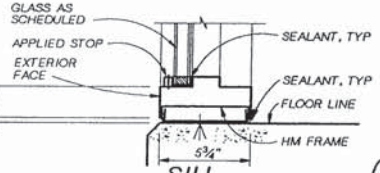

SILL (112)
3"=1'-0"

KAREN A. HOOD — REGISTERED PROFESSIONAL ENGINEER

CH2M HILL

DSGN	JO HANSEN
DR	BB LAZARO
CHK	C FILANOWICZ
APVD	K HOOD

NO.	DATE	REVISION	BY	APVD

REUSE OF DOCUMENTS
THIS DOCUMENT, AND THE IDEAS AND DESIGNS INCORPORATED HEREIN, AS AN INSTRUMENT OF PROFESSIONAL SERVICE, IS THE PROPERTY OF CH2M HILL AND IS NOT TO BE USED, IN WHOLE OR IN PART, FOR ANY OTHER PROJECT WITHOUT THE WRITTEN AUTHORIZATION OF CH2M HILL.
©CH2M HILL

BAR IS ONE INCH ON ORIGINAL DRAWING. 0 1" IF NOT ONE INCH ON THIS SHEET, ADJUST SCALES ACCORDINGLY.

CITY OF WENATCHEE, WASHINGTON
WASTEWATER TREATMENT PLANT IMPROVEMENTS

STANDARD DETAILS
ARCHITECTURAL STANDARD DETAILS

DWG NO. 250-D-1
DATE NOV. 1990
PROJ NO. SEA24579.N1

DATE: 11-6-90
DRAWN BY: BB LAZARO DESIGNED BY: J. HANSEN
DGN NAME: O:/PROJ2/WENATCHE/WE2500-B.DGN

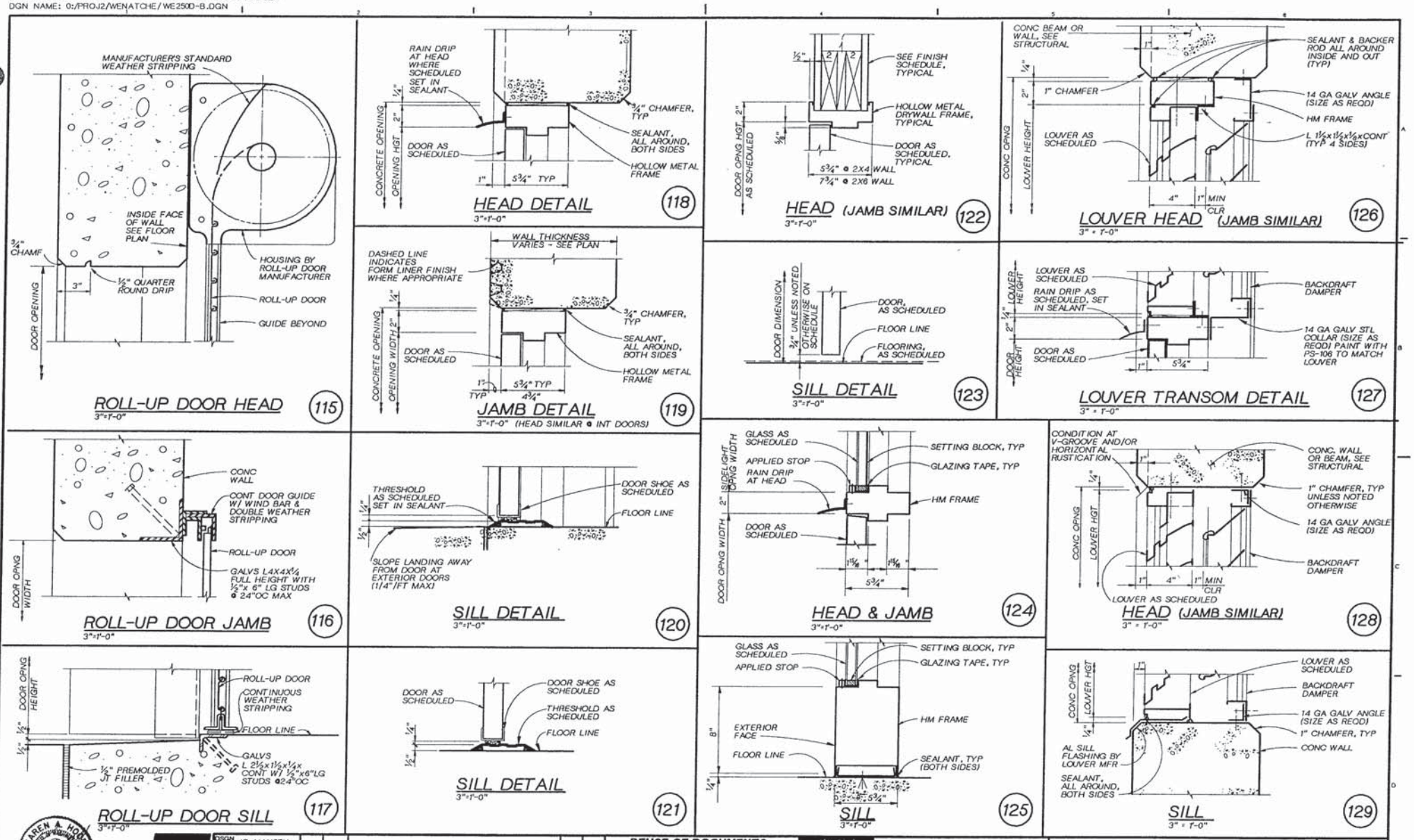

KAREN A. HOOD
REGISTERED PROFESSIONAL ENGINEER

CH2M HILL

DSGN	JO HANSEN
DR	BB LAZARO
CHK	C FILANOWICZ
APVD	K HOOD

NO.	DATE	REVISION	BY	APVD

REUSE OF DOCUMENTS
THIS DOCUMENT, AND THE IDEAS AND DESIGNS INCORPORATED HEREIN, AS AN INSTRUMENT OF PROFESSIONAL SERVICE, IS THE PROPERTY OF CH2M HILL AND IS NOT TO BE USED, IN WHOLE OR IN PART, FOR ANY OTHER PROJECT WITHOUT THE WRITTEN AUTHORIZATION OF CH2M HILL.
©CH2M HILL

BAR IS ONE INCH ON ORIGINAL DRAWING.
0 1"
IF NOT ONE INCH ON THIS SHEET, ADJUST SCALES ACCORDINGLY.

CITY OF WENATCHEE, WASHINGTON
WASTEWATER TREATMENT PLANT IMPROVEMENTS

STANDARD DETAILS
ARCHITECTURAL STANDARD DETAILS

DWG NO. 250-D-2
DATE NOV. 1990
PROJ NO. SEA24579.N1

DATE: 11-6-90
DRAWN BY: TW MCINTYRE DESIGNED BY: J. HANSEN
DGN NAME: 0:/PROJ2/WENATCHE/WE2500-D.DGN 250-D-3

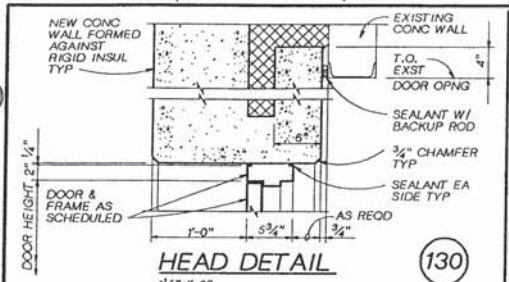

HEAD DETAIL (130)

1 1/2"=1'-0"

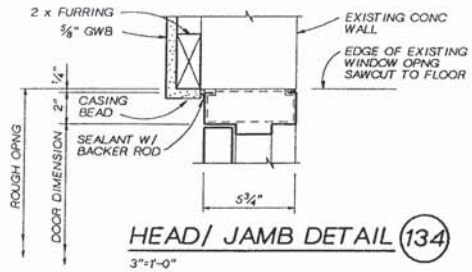

HEAD/ JAMB DETAIL (134)

3"=1'-0"

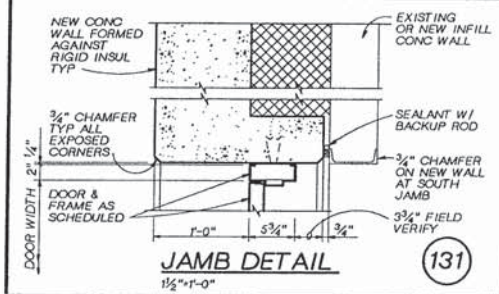

JAMB DETAIL (131)

1 1/2"=1'-0"

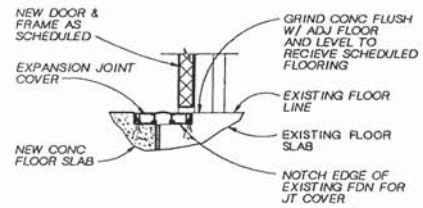

EXPANSION JOINT DETAIL (135)

1 1/2"=1'-0"

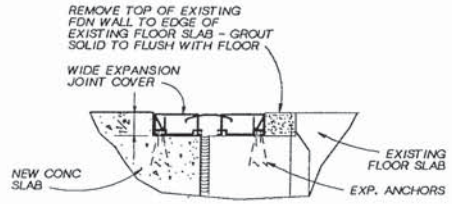

EXPANSION JOINT DETAIL (136)

3" = 1'-0"

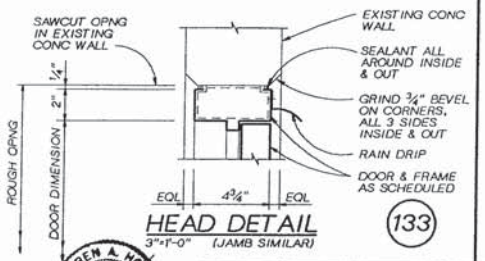

HEAD DETAIL (133)

3"=1'-0" (JAMB SIMILAR)

WINDOW AND RELITE SCHEDULE

MARK NO.	OPENING SIZE WIDTH	OPENING SIZE HEIGHT	WINDOW TYPE	WINDOW GLASS	WINDOW COL	FRAME MAT'L	FRAME FNSH	FRAME COL	DETAILS HEAD	DETAILS JAMB	DETAILS SILL	LOCATION
W-1	6'-0"	2'-9"	C&F	T.I.G.-T	GREY	AL	ANOD	CLEAR	150	150	151	ADMINISTRATION BLDG
W-2	6'-0"	2'-9"	GB	AS SPECD	CLEAR	STL	107	P2	152	SIM 153	153	ADMINISTRATION BLDG
W-3A	3'-0"	2'-9"	FIX	F.G.	CLEAR	HM	107	P2	148	148	148	ADMINISTRATION BLDG
W-3B	3'-4"	2'-9"	FIX	F.G.	CLEAR	HM	107	P2	148	148	148	ADMINISTRATION BLDG
W-4	3'-0"	4'-8"	P	I.G.-T	GREY	HM	107	P2	126/124	SIM 148	SIM 112	SOLIDS HANDLING BLDG
W-5	6'-6"	9'-0"	F&P	I.G.-T	GREY	AL	ANOD	CLEAR	149	SIM 149	111	SOLIDS HANDLING BLDG
W-6	3'-0"	9'-0"	F&P	I.G.-T	GREY	AL	ANOD	CLEAR	149	SIM 149	111	SOLIDS HANDLING BLDG

WINDOW TYPES

AWNING (A) AWNING
CSMT (C) CASEMENT
FIX (F) FIXED
PROJ (P) PROJECTED
GB GLASS BLOCK

LOUVER AND VENT SCHEDULE

MARK NO.	OPENING WIDTH HEIGHT	LOUVER TYPE	LOUVER MAT'L	LOUVER FNSH	LOUVER COL	DETAILS HEAD	DETAILS JAMB	DETAILS SILL	LOCATION
L-50/1	36" x 30"	DB	AL	ANOD	CLEAR	128	128	129	HEADWORKS
L-50/2	96" x 48"	DB	AL	ANOD	CLEAR	128	128	129	HEADWORKS
L-50/3	36" x 60"	DB	AL	ANOD	CLEAR	128	128	129	HEADWORKS
L-50/4	36" x 24"	DB	AL	ANOD	CLEAR	126	126	127	HEADWORKS
L-50/5	36" x 36"	DB	AL	ANOD	CLEAR	126	126	127	HEADWORKS
L-50/6	"NOT USED"	DB							
L-80/1	12" x 24"	DB	AL	ANOD	CLEAR	128	128	129	SOLIDS HANDLING BLDG
L-80/2	72" x 72"	DB	AL	ANOD	CLEAR	128	128	129	SOLIDS HANDLING BLDG
L-80/3	48" x 24"	DB	AL	ANOD	CLEAR	128	128	129	SOLIDS HANDLING BLDG
L-80/4	68" x 30"	DB	AL	ANOD	CLEAR	126	126	127	SOLIDS HANDLING BLDG
L-80/5	36" x 42"	DB	AL	ANOD	CLEAR	126	126	127	SOLIDS HANDLING BLDG
L-80/6	36" x 60"	DB	AL	ANOD	CLEAR	126	126	127	SOLIDS HANDLING BLDG
L-80/7	36" x 48"	DB	AL	ANOD	CLEAR	126	126	127	SOLIDS HANDLING BLDG
L-80/8	74" x 36"	DB	AL	ANOD	CLEAR	126	126	127	SOLIDS HANDLING BLDG
L-80/9	48" x 72"	DB	AL	ANOD	CLEAR	128	128	129	SOLIDS HANDLING BLDG
L-80/10	40" x 42"	DB	AL	ANOD	CLEAR	128	128	129	SOLIDS HANDLING BLDG
L-80/11	36" x 24"	DB	AL	ANOD	CLEAR	126	126	127	SOLIDS HANDLING BLDG
L-100/1	22" x 36"	DB	AL	ANOD	CLEAR	155	156	157	ADMINISTRATION BLDG

LOUVER TYPE

DB DRAINABLE BLADE

KAREN A. HOOD STATE OF WASHINGTON PROFESSIONAL ENGINEER

CH2M HILL

DSGN JO HANSEN
DR TW MCINTYRE
CHK C FILANOWICZ
APVD K HOOD

NO.	DATE	REVISION	BY	APVD

REUSE OF DOCUMENTS
THIS DOCUMENT, AND THE IDEAS AND DESIGNS INCORPORATED HEREIN, AS AN INSTRUMENT OF PROFESSIONAL SERVICE, IS THE PROPERTY OF CH2M HILL AND IS NOT TO BE USED, IN WHOLE OR IN PART, FOR ANY OTHER PROJECT WITHOUT THE WRITTEN AUTHORIZATION OF CH2M HILL.
©CH2M HILL

BAR IS ONE INCH ON ORIGINAL DRAWING.
0 1"
IF NOT ONE INCH ON THIS SHEET, ADJUST SCALES ACCORDINGLY.

CITY OF WENATCHEE, WASHINGTON
WASTEWATER TREATMENT PLANT IMPROVEMENTS

STANDARD DETAILS
ARCHITECTURAL STANDARD DETAILS

DWG NO. 250-D-3
DATE NOV. 1990
PROJ NO. SEA24579.N1

DATE: 11-06-90
DRAWN BY: BB LAZARO DESIGNED BY: J. HANSEN
DGN NAME: 0:/PROJ2/WENATCHE/WE250D-C.DGN 250-D-4

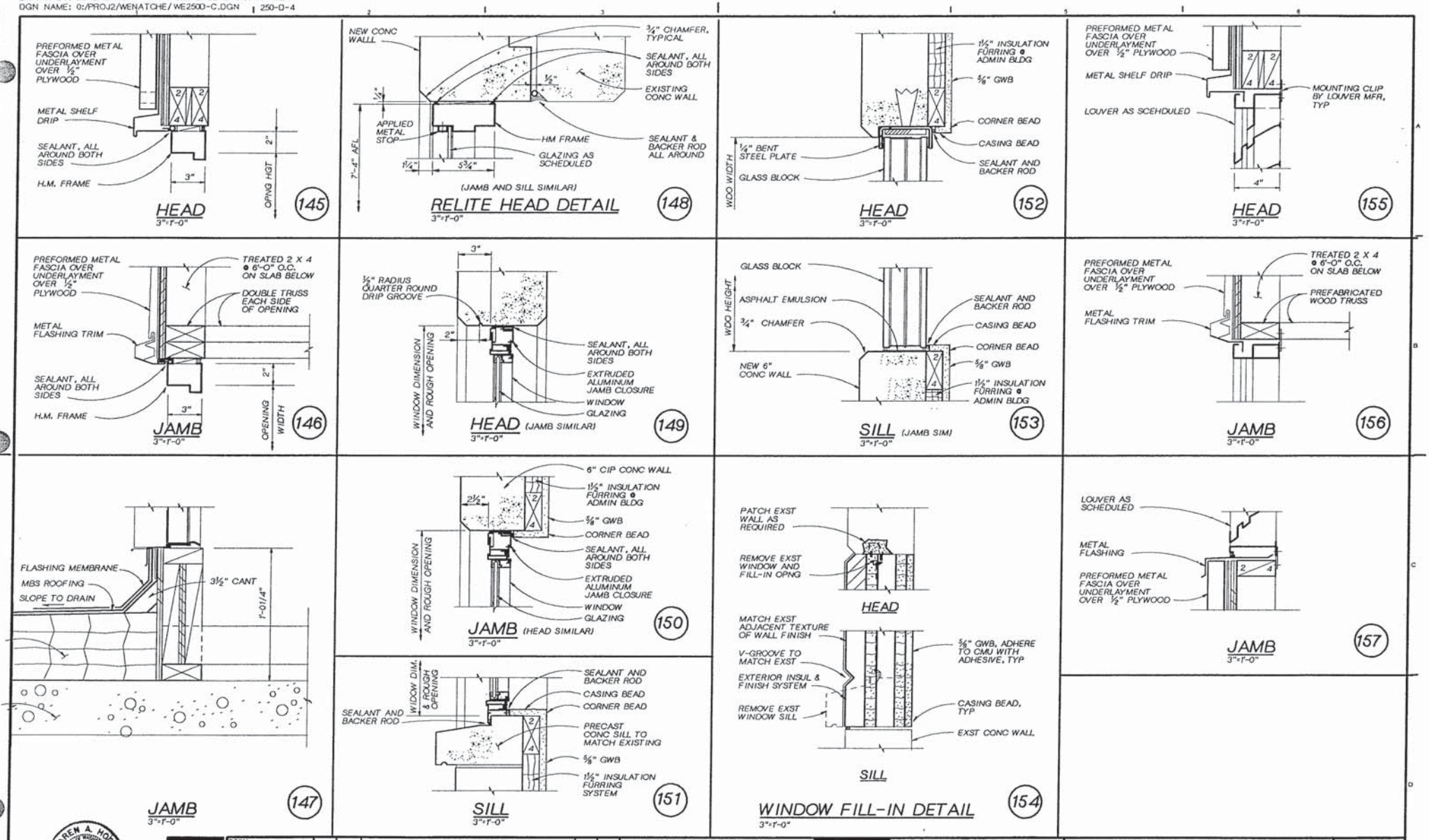

KAREN A. HOOD — STATE OF WASHINGTON — PROFESSIONAL ENGINEER

CH2M HILL

DSGN	JO HANSEN
DR	BB LAZARO
CHK	C FILANOWICZ
APVD	K HOOD

NO.	DATE	REVISION	BY	APVD

REUSE OF DOCUMENTS
THIS DOCUMENT, AND THE IDEAS AND DESIGNS INCORPORATED HEREIN, AS AN INSTRUMENT OF PROFESSIONAL SERVICE, IS THE PROPERTY OF CH2M HILL AND IS NOT TO BE USED, IN WHOLE OR IN PART, FOR ANY OTHER PROJECT WITHOUT THE WRITTEN AUTHORIZATION OF CH2M HILL.
©CH2M HILL

BAR IS ONE INCH ON ORIGINAL DRAWING. 0 1"
IF NOT ONE INCH ON THIS SHEET, ADJUST SCALES ACCORDINGLY.

CITY OF WENATCHEE, WASHINGTON
WASTEWATER TREATMENT PLANT IMPROVEMENTS

STANDARD DETAILS
ARCHITECTURAL STANDARD DETAILS

DWG NO. 250-D-4
DATE NOV. 1990
PROJ. NO. SEA24579.N1

DATE: 11-06-90
DRAWN BY: O A FRIAL DESIGNED BY: J. HANSEN
DGN NAME: 0:/PROJ2/WENATCHE/ WE250D-E.DGN

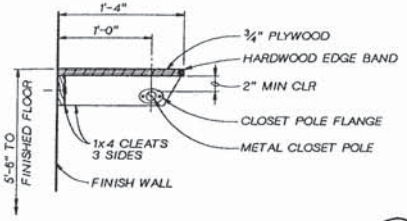

CLOSET SHELF SECTION (173)
1½" = 1'-0"

NOT USED (176)

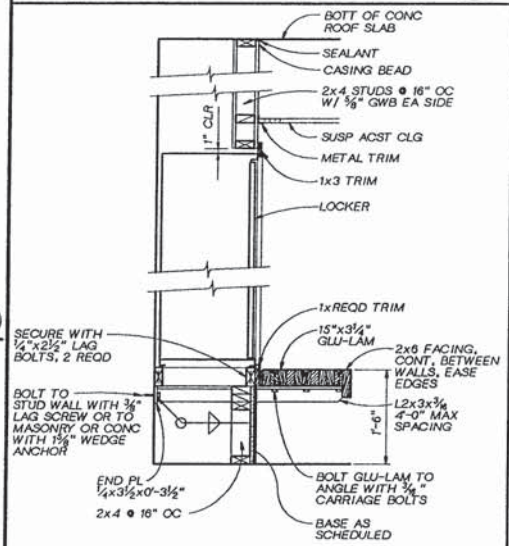

LOCKER AND BENCH SECTION (174)
1" = 1'-0"

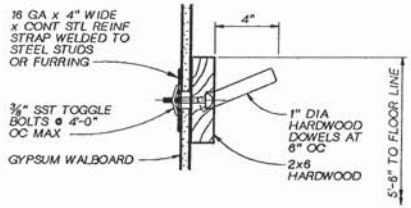

COAT PEG DETAIL (177)
3" = 1'-0"

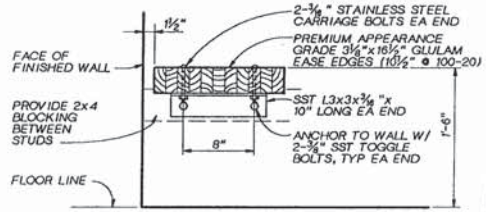

SHOWER BENCH DETAIL (178)
1½" = 1'-0"

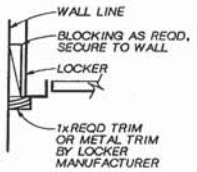

DETAIL AT LOCKERS (175)
NTS

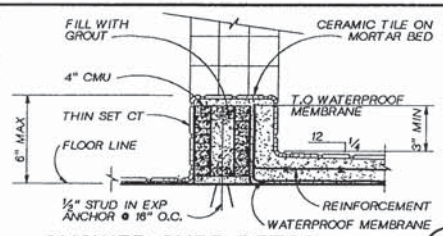

SHOWER CURB DETAIL (179)
3" = 1'-0"

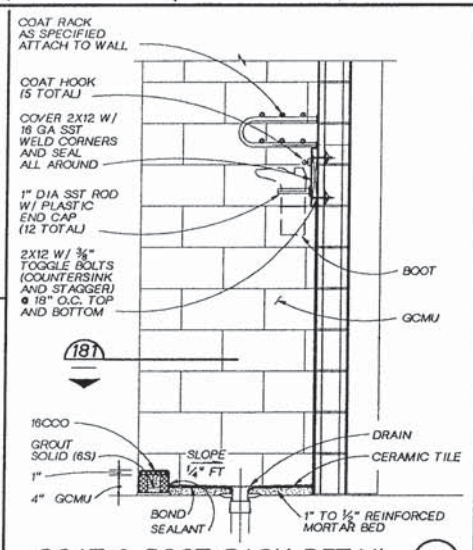

COAT & BOOT RACK DETAIL (180)
1" = 1'-0"

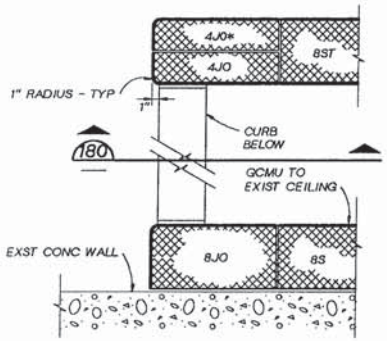

* GCMU NUMBERS FROM SPECTRA-GLAZE II CATALOG (TYP)

WET CLOSET PLAN SECTION (181)
1½" = 1'-0"

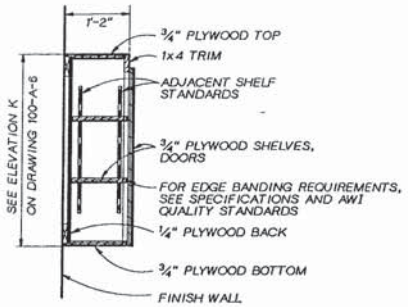

WALL CABINET SECTION (182)
NTS

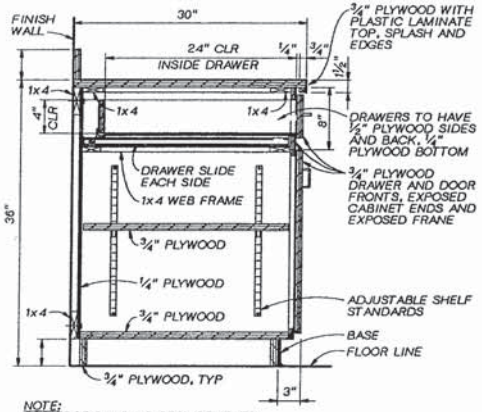

NOTE:
FOR EDGE BANDING REQUIREMENTS, SEE SPECIFICATIONS AND AWI.

BASE CABINET SECTION (183)
NTS

DSGN J.O.HANSEN					
DR O.A.FRIAL					
CHK C.FILANOWICZ					
APVD K HOOD	NO.	DATE	REVISION	BY	APVD

CH2M HILL

REUSE OF DOCUMENTS
THIS DOCUMENT, AND THE IDEAS AND DESIGNS INCORPORATED HEREIN, AS AN INSTRUMENT OF PROFESSIONAL SERVICE, IS THE PROPERTY OF CH2M HILL AND IS NOT TO BE USED, IN WHOLE OR IN PART, FOR ANY OTHER PROJECT WITHOUT THE WRITTEN AUTHORIZATION OF CH2M HILL.
©CH2M HILL

BAR IS ONE INCH ON ORIGINAL DRAWING. 0 1"
IF NOT ONE INCH ON THIS SHEET, ADJUST SCALES ACCORDINGLY.

CITY OF WENATCHEE, WASHINGTON
WASTEWATER TREATMENT PLANT IMPROVEMENTS

STANDARD DETAILS
ARCHITECTURAL STANDARD DETAILS

DWG NO. 250-D-5
DATE NOV. 1990
PROJ NO. SEA24579.N1

DATE: 11-06-90 DLC
DRAWN BY: R. FRIBERG DESIGNED BY: R. FRIBERG
DGN NAME: O:/PROJ2/WENATCHE/WE250D-F.DGN

GENERAL STRUCTURAL NOTES

REINFORCING DETAILS

1. THE MINIMUM REINFORCING FOR ALL CONCRETE WALLS AND SLABS SHALL BE AS FOLLOWS:

WALL THICKNESS	REINF EACH WAY	LOCATION
6"	#4@12"	CENTERED
8"	#5@12"	CENTERED
10"	#4@12"	EACH FACE
12"	#5@12"	EACH FACE

PROVIDE LARGER SIZES AND MORE REINFORCING IN ALL SECTIONS OF CONCRETE WHERE REQUIRED BY THE DETAILS ON THE DRAWINGS OR BY THE SPECIFICATIONS.

2. CLEARANCE FOR REINFORCEMENT BARS, UNLESS SHOWN OTHERWISE, SHALL BE:
   - WHEN PLACED ON GROUND: —— 3"
   - ALL OTHER CONCRETE SURFACES:
     - #5 BAR OR SMALLER —— 1½"
     - #6 BAR OR LARGER —— 2"
3. REFER TO WALL CORNER AND WALL INTERSECTION REINFORCING DETAIL. IN GENERAL, THE WALL CORNER REINFORCING SIZES AND SPACINGS SHALL BE CALLED OUT ON THE PLANS AND REFERENCED TO THESE DETAILS AND THE TYPICAL HORIZONTAL WALL REINFORCING SHALL LAP WITH THE HORIZONTAL REINFORCING.
4. ALL BENDS, UNLESS OTHERWISE SHOWN, SHALL BE A 90 DEGREE STANDARD HOOK AS DEFINED IN LATEST EDITION OF ACI 318.
5. ALL WALL CORNER AND WALL INTERSECTION REINFORCEMENT BARS SHALL BE CONTINUOUS AROUND CORNERS AND THROUGH COLUMNS OR PILASTERS. REINFORCEMENT SHALL BE EXTENDED INTO CONNECTING WALLS AND LAPPED ON THE OPPOSITE FACE OF THE CONNECTING WALLS, AS INDICATED ELSEWHERE ON THIS SHEET.
6. VERTICAL WALL BARS SHALL BE LAPPED WITH DOWELS FROM BASE SLABS AND EXTENDED INTO THE TOP FACE OF ROOF SLABS AND LAPPED WITH TOP SLAB REINFORCEMENT. PROVIDE A MINIMUM OF TWO FULL HEIGHT VERTICAL BARS WITH MATCHING DOWELS AT WALL ENDS, CORNERS AND INTERSECTIONS WITH SIZE TO MATCH TYPICAL VERTICAL REINFORCING STEEL SHOWN OR REQUIRED BY NOTES ABOVE.
7. UNLESS INDICATED OTHERWISE, CONTRACTOR MAY SPLICE CONTINUOUS SLAB OR LONGITUDINAL BEAM BARS AT LOCATIONS OF HIS CHOOSING, EXCEPT THAT TOP BAR SPLICES SHALL BE LOCATED AT MIDSPAN AND BOTTOM BAR SPLICES SHALL BE LOCATED AT SUPPORTS. ALL REINFORCEMENT BENDS AND LAPS, UNLESS OTHERWISE NOTED, SHALL SATISFY THE FOLLOWING MINIMUM REQUIREMENT:

DETAIL OF REINFORCEMENT - LAP LENGTHS

BAR SIZE		#6 OR SMALLER	#7	#8	#9	#10	#11
CONC DESIGN STRENGTH		3000 PSI					
GR 40	TOP BAR*	34 DIA, MIN 1'-6"	3'-0"	3'-9"	4'-8"	6'-0"	7'-3"
	OTHER BAR	24 DIA, MIN 1'-0"	2'-0"	2'-8"	3'-4"	4'-4"	5'-2"
GR 60	TOP BAR*	49 DIA, MIN 2'-0"	4'-2"	5'-6"	7'-0"	8'-8"	10'-10"
	OTHER BAR	35 DIA, MIN 1'-6"	3'-0"	4'-0"	5'-0"	6'-6"	7'-9"
CONC DESIGN STRENGTH		3500 PSI					
GR 40	TOP BAR*	33 DIA, MIN 1'-6"	2'-9"	3'-6"	4'-4"	5'-6"	6'-8"
	OTHER BAR	24 DIA, MIN 1'-0"	1'-10"	2'-6"	3'-2"	4'-0"	4'-10"
GR 60	TOP BAR*	47 DIA, MIN 2'-0"	3'-10"	5'-2"	6'-6"	8'-2"	10'-0"
	OTHER BAR	34 DIA, MIN 1'-6"	2'-10"	3'-9"	4'-8"	6'-0"	7'-3"
CONC DESIGN STRENGTH		4000 PSI					
GR 40	TOP BAR*	32 DIA, MIN 1'-6"	2'-6"	3'-3"	4'-0"	5'-0"	6'-4"
	OTHER BAR	22 DIA, MIN 1'-0"	1'-9"	2'-4"	3'-0"	3'-8"	4'-6"
GR 60	TOP BAR*	45 DIA, MIN 2'-0"	3'-8"	4'-9"	6'-0"	7'-8"	9'-6"
	OTHER BAR	32 DIA, MIN 1'-6"	2'-8"	3'-6"	4'-4"	5'-6"	6'-9"

* TOP BARS SHALL BE DEFINED AS ANY HORIZONTAL BARS PLACED SUCH THAT MORE THAN 12" OF FRESH CONCRETE IS CAST IN THE MEMBER BELOW THE BAR, IN ANY SINGLE POUR. HORIZONTAL WALL BARS ARE CONSIDERED TOP BARS.

8. CONTINUOUS GALVANIZED STEEL WATERSTOP AS SPECIFIED, SHALL BE INSTALLED IN ALL CONSTRUCTION JOINTS IN WALLS OF WATER HOLDING BASINS AND CHANNELS, EXCEPT WHERE INDICATED OTHERWISE.
9. PROVIDE AND INSTALL SELECT GRANULAR MATERIAL AS SPECIFIED UNDER ALL SLABS AND FOOTINGS TO UNDISTURBED EARTH WITH MINIMUM THICKNESS, EQUAL TO 6", UNLESS OTHERWISE NOTED.
10. INCREASE LAP LENGTHS SHOWN ABOVE BY 25% WHERE BARS ARE SPACED CLOSER THAN 6" O.C. OR LESS THAN 3" FROM FACE OF MEMBER TO EDGE BAR MEASURED IN DIRECTION OF SPACING.

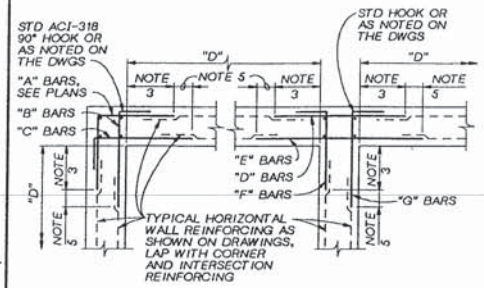

TYPICAL DOUBLE MAT CORNER AND INTERSECTION REINFORCING

NTS (SEE PLANS FOR SIZE AND SPACING)

GENERAL STRUCTURAL NOTES

CORNER AND INTERSECTION REINFORCING DETAILS

1. TYPICAL HORIZONTAL WALL CORNER AND INTERSECTION REINFORCING LAYOUT IS SHOWN TO AVOID CONGESTION AND PERMIT PROPER PLACEMENT, FOR SIZE AND SPACING SEE PLANS. ALL HORIZONTAL REINFORCING AT CORNERS AND INTERSECTIONS SHALL BE FABRICATED AND INSTALLED WITH SPLICES LOCATED WHERE SHOWN REGARDLESS OF BAR SIZE AND SPACING.
2. WHERE THE CORNER OR INTERSECTION REINFORCING SIZE AND SPACING IS NOT SHOWN, NOTED OR TABULATED ON THE PLANS, THE SIZE AND SPACING SHALL BE THE SAME AS THE WALL HORIZONTAL REINFORCING SHOWN ON THE WALL SECTIONS OR AS NOTED FOR THE REINFORCING BETWEEN THE CORNERS OR INTERSECTIONS.
3. EXCEPT WHERE OTHERWISE SHOWN ON THE DRAWINGS, THE LENGTH INDICATED AS "NOTE 3" SHALL BE THE LESSER OF D/4, 10 FEET, OR 1.0 TIMES THE HEIGHT OF THE WALL, EXCEPT THAT IN NO CASE SHALL IT BE LESS THAN 2.0 FEET.
4. D = LENGTH OF WALL PARALLEL TO THE BAR LENGTH IN QUESTION.
5. EXCEPT WHERE OTHERWISE SHOWN ON THE DRAWINGS, THE LENGTH INDICATED AS "NOTE 5" SHALL BE EQUAL TO ONE "LAP LENGTH" AS REQUIRED BY THE GENERAL STRUCTURAL NOTES. USE THE LAP LENGTH AS REQUIRED FOR THE SMALLER OF THE TWO REINFORCING BARS BEING SPLICED.
6. UNLESS OTHERWISE NOTED, "B" AND "C" BARS ARE THE SAME SIZE AND SPACING AND, "E" AND "G" BARS ARE THE SAME SIZE AND SPACING.

202

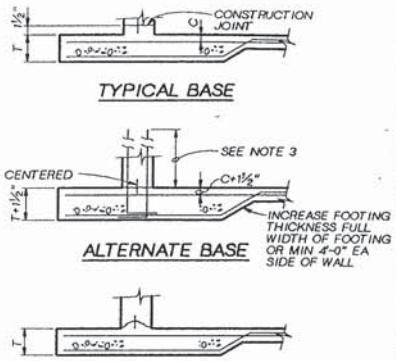

NOTES:
1. C-MIN CLR FOR REINF BARS, SEE GENERAL STRUCTURAL NOTES.
2. T-FOOTING THICKNESS AS DETAILED.
3. WHEN USING ALTERNATE BASE INCREASE DOWEL BARS TO PROVIDE SAME LAP LENGTH AS TYPICAL BASE.

WALL BASE CONSTRUCTION JOINT

NTS

205

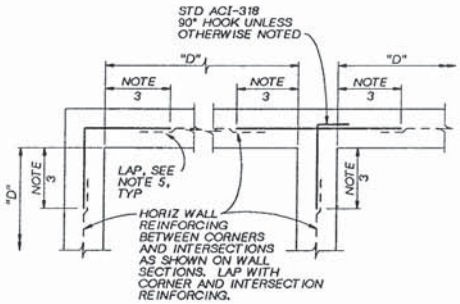

TYPICAL SINGLE MAT CORNER AND INTERSECTION REINFORCING

NTS

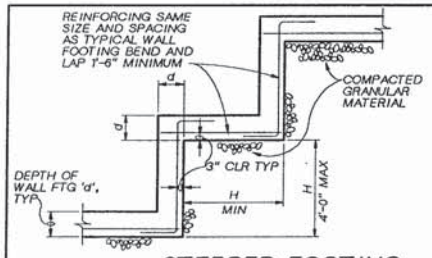

STEPPED FOOTING

NTS

203

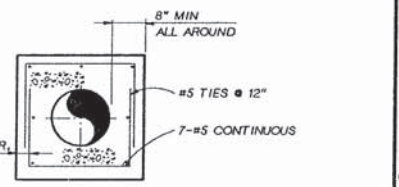

PIPE ENCASEMENT

NTS

206

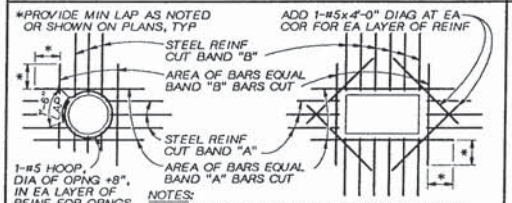

NOTES:
1. TYPICAL FOR ALL OPENINGS IN CONCRETE WALLS AND SLABS UNLESS INDICATED OTHERWISE ON PLANS.
2. DO NOT WELD REINFORCEMENT TO PIPE SLEEVES AND INSERTS.

OPENING REINFORCING

NTS

204

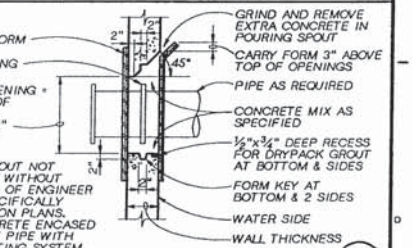

NOTES:
1. PIPE BLOCKOUT NOT TO BE USED WITHOUT PERMISSION OF ENGINEER UNLESS SPECIFICALLY INDICATED ON PLANS.
2. COAT CONCRETE ENCASED PORTION OF PIPE WITH SPECD COATING SYSTEM.

PIPE BLOCKOUT

NTS

207

201

KAREN A. HOOD, STATE OF WASHINGTON, REGISTERED PROFESSIONAL ENGINEER

CH2M HILL

DSGN	R FRIBERG
DR	R FRIBERG
CHK	L ARAGON
APVD	K HOOD

NO.	DATE	REVISION	BY	APVD

REUSE OF DOCUMENTS
THIS DOCUMENT, AND THE IDEAS AND DESIGNS INCORPORATED HEREIN, AS AN INSTRUMENT OF PROFESSIONAL SERVICE, IS THE PROPERTY OF CH2M HILL AND IS NOT TO BE USED, IN WHOLE OR IN PART, FOR ANY OTHER PROJECT WITHOUT THE WRITTEN AUTHORIZATION OF CH2M HILL.
©CH2M HILL

BAR IS ONE INCH ON ORIGINAL DRAWING. 0 1" IF NOT ONE INCH ON THIS SHEET, ADJUST SCALES ACCORDINGLY.

CITY OF WENATCHEE, WASHINGTON
WASTEWATER TREATMENT PLANT IMPROVEMENTS

STANDARD DETAILS
STRUCTURAL STANDARD DETAILS

DWG NO. 250-D-6
DATE NOV. 1990
PROJ NO. SEA24579.N1

DATE: 11-06-90
DRAWN BY: R. FRIBERG DESIGNED BY: R. FRIBERG
DGN NAME: O:/PROJ2/WENATCHE/WE2500-G.DGN

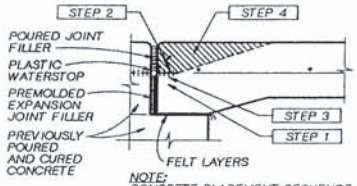

NOTE:
CONCRETE PLACEMENT SEQUENCE IS THE SAME ON BASE SLAB EXPANSION JOINT.

STEP 1
PLACE CONCRETE BELOW WATERSTOP FIRST. REMOVE ALL AIR VOIDS BY VIBRATING THOROUGHLY.

STEP 2
TO CONFIRM THERE ARE NO AIR VOIDS, LIFT WATERSTOP. A CONTINUOUS IMPRESSION OF THE WATERSTOP, INCLUDING EDGE OF BULB, SHOULD BE VISIBLE IN THE FRESH CONCRETE. CONTINUE THIS PROCEDURE ALONG THE ENTIRE POURED JOINT, END TO END. IF A CONTINUOUS IMPRESSION IS CONFIRMED, PROCEED WITH STEP 4. IF A VOID LARGER THAN ¼ INCH IN DIAMETER IS PRESENT ANYWHERE IN THE WATERSTOP IMPRESSION, PROCEED WITH STEP 3.

STEP 3
IF A VOID LARGER THAN ¼ INCH IN DIAMETER IS PRESENT IN THE WATERSTOP IMPRESSION, ADDITIONAL CONCRETE SHALL BE PLACED UNDER THE WATERSTOP, VIBRATED, AND STEP 2 REPEATED.

STEP 4
FINISH PLACING CONCRETE ABOVE THE WATERSTOP TO TOP OF SLAB.

CONCRETE PLACEMENT SEQUENCE AT EXPANSION JOINT (208)
NTS (SEE EXPANSION JOINT DETAILS FOR SPECIFIC MATERIALS)

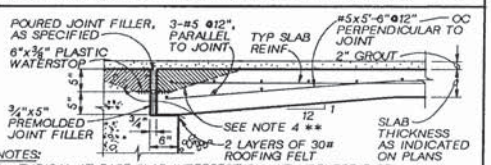

NOTES:
1. TYPICAL AT BASE SLAB INTERSECTION WITH CENTER PIER.
2. JOINT AT BASE SLAB TO WALL FOOTING, SHALL BE SIMILAR, SEE TYPICAL WALL SECTION.
3. SLAB SLOPE MAY VARY FROM THAT SHOWN SEE STRUCTURAL PLAN.
4. PLACE CONCRETE AROUND WATERSTOP AS SHOWN ON "CONCRETE PLACEMENT SEQUENCE AT EXPANSION JOINT" DETAIL.
5. DEFLECT W.S. IN PERPENDICULAR BASE SLAB JT TO MEET W.S. SHOWN.

CLARIFIER CENTER PIER EXPANSION JOINT (209)
NTS

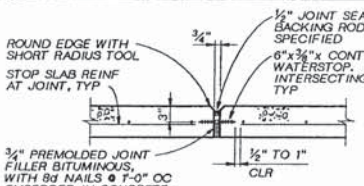

ELEVATED SLAB EXP JOINT (210)
NTS

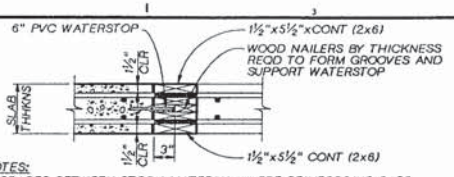

NOTES:
1. SPACES BETWEEN STOCK MATERIAL WHERE REINFORCING BARS DO NOT PENETRATE BULKHEAD SHALL BE FILLED WITH STYROFOAM CUT TO FIT. THICKNESS OF REINFORCING BARS.
2. REINFORCING BARS AT CONSTRUCTION JOINTS SHALL NOT BE SPLICED, CUT, WELDED OR OTHERWISE ALTERED FROM THAT SHOWN ON THE PLANS.
3. STRIP WOOD FORMS ONE DAY FOLLOWING CASTING AND ROUGHEN CONCRETE WITH WIRE BRUSH TO INCREASE BOND CAPACITY OF CONCRETE.

SLAB CONSTRUCTION JOINT (211)
NTS

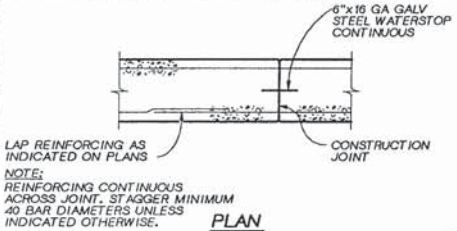

NOTE:
REINFORCING CONTINUOUS ACROSS JOINT. STAGGER MINIMUM 40 BAR DIAMETERS UNLESS INDICATED OTHERWISE.

PLAN

VERTICAL CONSTRUCTION JOINT (212)
NTS

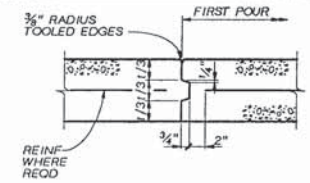

SLAB ON GRADE KEYED CONSTRUCTION JOINT (213)
NTS

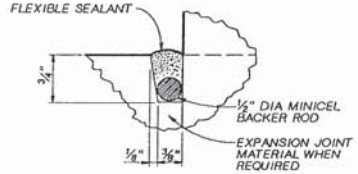

JOINT SEALANT (214)
NTS

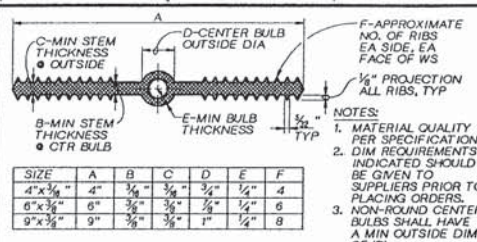

SIZE	A	B	C	D	E	F
4"x3/8"	4"	3/8"	3/8"	3/4"	1/4"	4
6"x3/8"	6"	3/8"	3/8"	7/8"	1/4"	6
9"x3/8"	9"	3/8"	3/8"	1"	1/4"	8

NOTES:
1. MATERIAL QUALITY PER SPECIFICATIONS.
2. DIM REQUIREMENTS INDICATED SHOULD BE GIVEN TO SUPPLIERS PRIOR TO PLACING ORDERS.
3. NON-ROUND CENTER BULBS SHALL HAVE A MIN OUTSIDE DIM OF "D".

PLASTIC WATERSTOP (215)
NTS

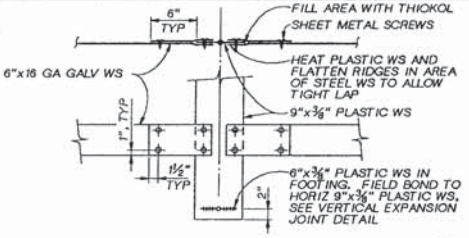

STEEL-PLASTIC WS SPLICE (216)
NTS

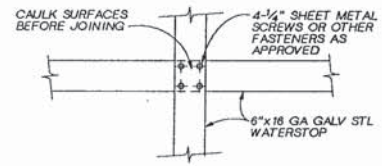

STEEL-STEEL WS SPLICE (217)
NTS

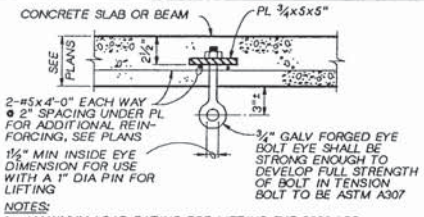

NOTES:
1. MAXIMUM LOAD RATING FOR LIFTING EYE 2000 LBS.
2. SUBMIT DATA ON EYE BOLT WITH SHOP DRAWINGS.

LIFTING EYE - 1 (218)
NTS

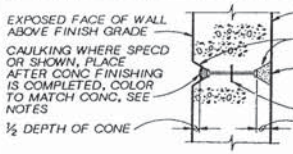

NOTES:
1. FOR FORM TIE HOLES ON OUTSIDE FACE OF WALL BELOW GRADE, FILL WITH NONSHRINK GROUT, (DRY PACK)
2. THE SPACING OF FORM TIES ON EXPOSED PORTIONS OF WALLS SHALL BE APPROXIMATELY EQUAL HORIZONTALLY AND VERTICALLY AND SHALL BE UNIFORM IN EACH DIRECTION.
3. WHERE CAULKING IS NOT SPECIFIED OR SHOWN, DRY PACK EXTERIOR TIE HOLES WITH NONSHRINK GROUT WITH COLOR OF GROUT TO MATCH COLOR OF CONCRETE AS CLOSE AS POSSIBLE.
4. DRY PACK METHOD SHALL BE AS SPECIFIED USING STEEL TOOLS.

FORM SNAP-TIE HOLE (219)
NTS

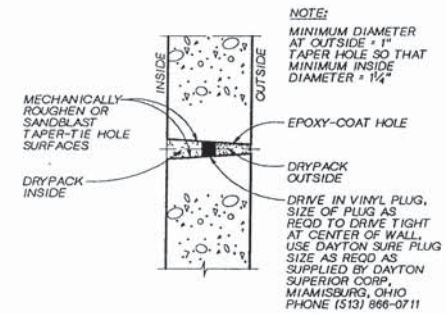

NOTE:
MINIMUM DIAMETER AT OUTSIDE = 1" TAPER HOLE SO THAT MINIMUM INSIDE DIAMETER = 1¼"

CONSTRUCTION STEPS:
1. SANDBLAST OR MECHANICALLY ROUGHEN WITH ELECTRIC EQUIPMENT.
2. DRIVE IN VINYL PLUG.
3. EPOXY COAT INSIDE AND WHILE EPOXY IS TACKY DRYPACK INSIDE.
4. EPOXY COAT OUTSIDE AND WHILE EPOXY IS TACKY DRYPACK OUTSIDE. USE NONMETALIC, NONSHRINK GROUT AS SPECIFIED.

ALTERNATE FORM TIE-THROUGH BOLT (220)
NTS

KAREN A. HOOD, STATE OF WASHINGTON, REGISTERED PROFESSIONAL ENGINEER

CH2M HILL

DSGN	R FRIBERG
DR	R FRIBERG
CHK	L ARAGON
APVD	K HOOD

NO.	DATE	REVISION	BY	APVD

REUSE OF DOCUMENTS
THIS DOCUMENT, AND THE IDEAS AND DESIGNS INCORPORATED HEREIN, AS AN INSTRUMENT OF PROFESSIONAL SERVICE, IS THE PROPERTY OF CH2M HILL AND IS NOT TO BE USED, IN WHOLE OR IN PART, FOR ANY OTHER PROJECT WITHOUT THE WRITTEN AUTHORIZATION OF CH2M HILL.
© CH2M HILL

BAR IS ONE INCH ON ORIGINAL DRAWING. 0 1" IF NOT ONE INCH ON THIS SHEET, ADJUST SCALES ACCORDINGLY.

CITY OF WENATCHEE, WASHINGTON
WASTEWATER TREATMENT PLANT IMPROVEMENTS

STANDARD DETAILS
STRUCTURAL STANDARD DETAILS

DWG NO. 250-D-7
DATE NOV. 1990
PROJ NO. SEA24579.N1

DATE: 11-06-90
DRAWN BY: R. FRIBERG DESIGNED BY: R. FRIBERG
DGN NAME: O:/PROJ2/WENATCHE/WE2500-H.DGN

EQUIPMENT BASE NOTES

1. PAD SIZE SHALL BE MINIMUM INDICATED OR AS SHOWN ON THE PLANS OR AS INDICATED BY THE MANUFACTURER AND APPROVED BY THE ENGINEER.
2. THE SIZE, NUMBER, TYPE, LOCATION, AND THREAD PROJECTION OF THE ANCHOR BOLTS SHALL BE DETERMINED BY THE EQUIPMENT MANUFACTURER, AND SHALL BE AS APPROVED BY THE ENGINEER. ANCHOR BOLTS SHALL BE HELD IN POSITION WITH A ONE PIECE TEMPLATE, MATCHING THE BASE PLATE, WHILE PAD IS BEING POURED.
3. ANCHOR BOLT SLEEVES SHALL BE USED TO PROVIDE THE ANCHOR BOLT A MINIMUM MOVEMENT OF ½" IN ALL DIRECTIONS. THE MINIMUM SLEEVE LENGTH SHALL BE 8 TIMES THE BOLT DIAMETER. SLEEVES SHALL BE FILLED WITH NON-SHRINK GROUT.
4. ANCHOR BOLT SLEEVES SHALL HAVE A MINIMUM INTERNAL DIAMETER 1" GREATER THAN BOLT DIAMETER AND A MAXIMUM INTERNAL DIAMETER 3" GREATER THAN ANCHOR BOLT DIAMETER. SLEEVES SHALL BE FILLED WITH NON-SHRINK GROUT.
5. EQUIPMENT BASES SHALL BE INSTALLED LEVEL UNLESS SPECIFIED OTHERWISE.
6. TYPE "D" DETAIL SHALL BE USED ONLY FOR SLABS ON GRADE AND AT GRADE. THE SURROUNDING FLOOR SLAB SHALL NOT BE PLACED UNTIL THE EXACT SIZE AND LOCATION OF THE PAD IS KNOWN.
7. WEDGES OR SHIMS SHALL BE USED TO SUPPORT THE BASE WHILE THE NON-SHRINK GROUT IS PLACED. TEMPORARY LEVELING NUTS SHALL BE BACKED OFF. IF LEFT IN, THE WEDGES OR SHIMS SHALL NOT BE EXPOSED TO VIEW.
8. HEIGHT OF PADS SHALL BE MINIMUM REQUIRED FOR ANCHOR BOLT CLEARANCE TO KEEP ANCHOR BOLT OUT OF SLAB (SEE TABLE BELOW). WHERE EQUIPMENT OR PIPING ELEVATION REQUIRE A PAD HEIGHT LESS THAN THE MINIMUM SHOWN, USE TYPE B WITH BLOCKOUT.

AB DIA (IN.)	½	⅝	¾	⅞	1	1¼	1⅜	1½	1¾	2
MIN PAD HT (IN.)	7	8½	10	11	12½	15	16½	18	21	24

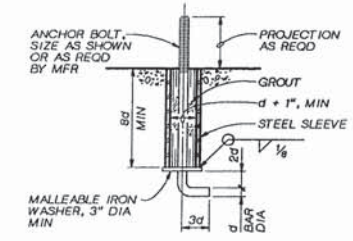

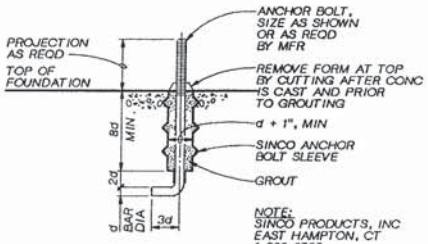

NOTE:
SINCO PRODUCTS, INC
EAST HAMPTON, CT
1-800-6753

ALTERNATE MACHINERY ANCHOR BOLT

NTS

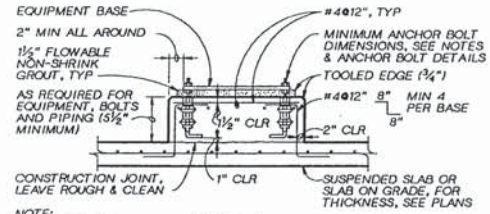

NOTE:
SEE EQUIPMENT BASE NOTES.

TYPE A

EQUIPMENT PAD

NTS

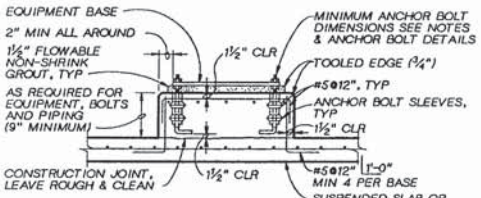

NOTE:
SEE EQUIPMENT BASE NOTES.

TYPE B

EQUIPMENT PAD

NTS

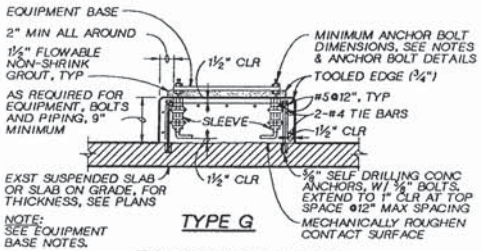

NOTE:
SEE EQUIPMENT BASE NOTES.

TYPE G

EQUIPMENT PAD

NTS

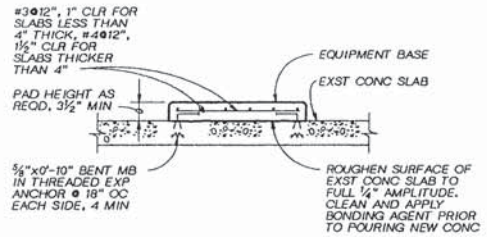

TYPE H

EQUIPMENT PAD

NTS

NOTES:
1. CONCRETE SHALL HAVE A MINIMUM 28 DAYS COMPRESSIVE STRENGTH OF 3000 PSI.
2. REINFORCING STEEL SHALL CONFORM TO ASTM 615, GRADE 40.
3. BONDING AGENT-TYPE AS RECOMMENDED FOR THIS APPLICATION, AS MANUFACTURED BY W.R. GRACE CO., SIKA CHEMICAL CORPORATION OR ADHESIVE ENGINEERING COMPANY.
4. EXPANSION ANCHORS-SELF DRILLING, SNAP-OFF OR FLUSH TYPE AS MANUFACTURED BY I.T.T. PHILLIPS DRILL DIVISION, OR HILTI HDI DROP-IN ANCHORS, OR EQUAL.
5. EQUIPMENT BASE SHALL BE INSTALLED LEVEL.
6. PAD SIZE SHALL BE AS INDICATED OR SHOWN ON THE PLANS. WHERE SIZE IS NOT INDICATED OR SHOWN, PAD SIZE SHALL BE DETERMINED BY THE EQUIPMENT SUPPLIER.

221

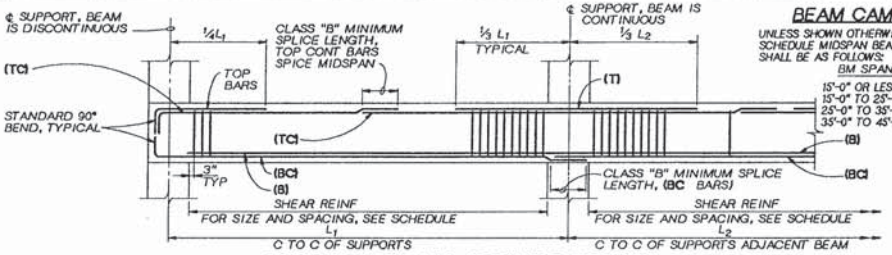

BEAM CAMBER

UNLESS SHOWN OTHERWISE IN SCHEDULE MIDSPAN BEAM CAMBER SHALL BE AS FOLLOWS:

BM SPAN	CAMBER
15'-0" OR LESS	NONE
15'-0" TO 25'-0"	½"
25'-0" TO 35'-0"	1"
35'-0" TO 45'-0"	1½"

TYPICAL BEAM REINFORCING

NTS

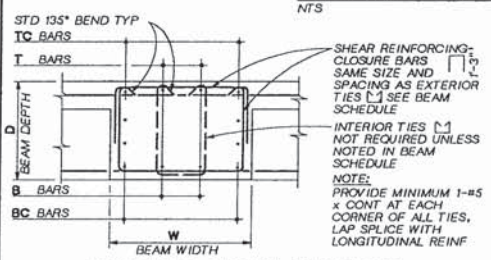

*TOP REINF. MAY BE CALLED-OUT TWICE IN SCHEDULE. (I.E. "TOP REINF. AT RIGHT SUPPORT" OF BEAM THAT IS CONTINUOUS OVER THE RIGHT SUPPORT IS CALLED-OUT AS "TOP REINF. AT LEFT SUPPORT" OF ADJACENT BEAM.)

LEFT SUPPORT IS DESIGNATED AS THE SUPPORT CLOSEST THE LEFT SIDE OR BOTTOM OF SHEET ON WHICH FRAMING PLAN IS DRAWN, UNLESS NOTED OTHERWISE ON PLAN.

TYPICAL BEAM SECTION

NTS

BEAM SCHEDULE

BEAM NO. (SEE PLANS)	SIZE		TOP REINF AT LEFT SUPPORT		BOTTOM REINF		* TOP REINF AT RIGHT SUPPORT		SHEAR REINF		REMARKS
	W	D	T	TC	B	BC	T	TC	NO. SIZE	SPACING FROM LEFT SUPPORT	

CONCRETE BEAM

NTS

222

DSGN R FRIBERG
DR R FRIBERG
CHK L ARAGON
APVD K HOOD

CH2M HILL

NO.	DATE	REVISION	BY	APVD

REUSE OF DOCUMENTS
THIS DOCUMENT, AND THE IDEAS AND DESIGNS INCORPORATED HEREIN, AS AN INSTRUMENT OF PROFESSIONAL SERVICE, IS THE PROPERTY OF CH2M HILL AND IS NOT TO BE USED, IN WHOLE OR IN PART, FOR ANY OTHER PROJECT WITHOUT THE WRITTEN AUTHORIZATION OF CH2M HILL.
©CH2M HILL

BAR IS ONE INCH ON ORIGINAL DRAWING.
0 1"
IF NOT ONE INCH ON THIS SHEET, ADJUST SCALES ACCORDINGLY.

CITY OF WENATCHEE, WASHINGTON
WASTEWATER TREATMENT PLANT IMPROVEMENTS

STRUCTURAL STANDARD DETAILS

DWG NO. 250-D-8
DATE NOV. 1990
PROJ NO. SEA24579.N1

DATE: 11-06-90 DLC
DRAWN BY: R. FRIBERG DESIGNED BY: R. FRIBERG
DGN NAME: O:/PROJ2/WENATCHE/ WE250D-1.DGN

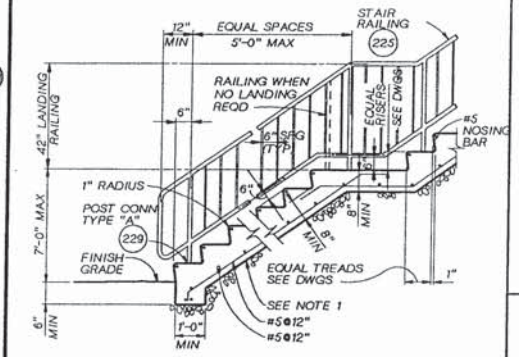

NOTES:

1. PLACE STEPS AND LANDING AGAINST FIRM UNDISTURBED MATERIAL OR APPROVED FILL.
2. WIDTH OF STEPS AND LANDING SHALL BE 3'-6", WITH A CROSS SLOPE OF ¼" PER FOOT, UNLESS NOTED.
3. SUPPORT WALL REQUIRED ALL AROUND LANDING OR STEPS, EXCEPT AT SIDES THAT ABUT A STRUCTURE. SEE (226) AND (227)
4. FOR TYPE OF HANDRAIL, SEE HANDRAIL DETAILS.

STEPS TO LANDING (223)
NTS

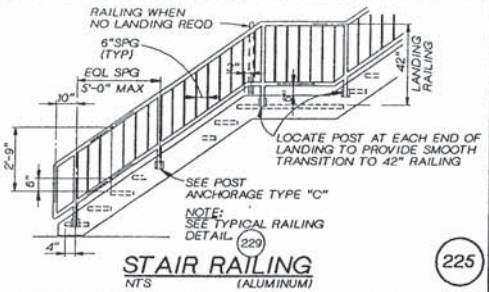

STAIR RAILING (225)
NTS (ALUMINUM)

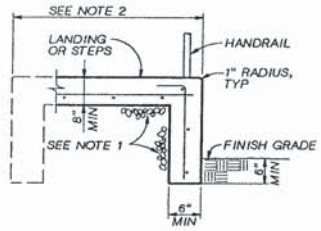

SUPPORT WALL (226)
NTS

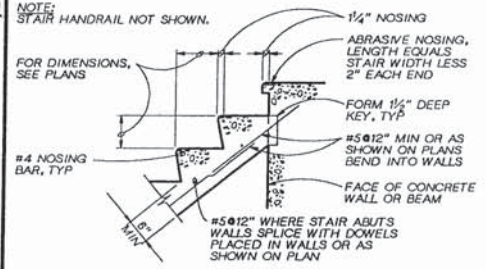

TOP CONN

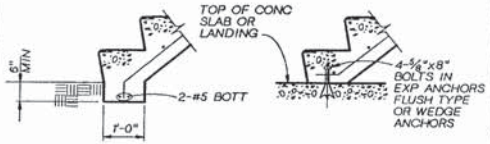

ALTERNATE CONN BOTTOM CONN

CONCRETE STAIR (224)
NTS

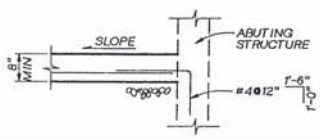

CONNECTION TO STRUCTURE (227)
NTS

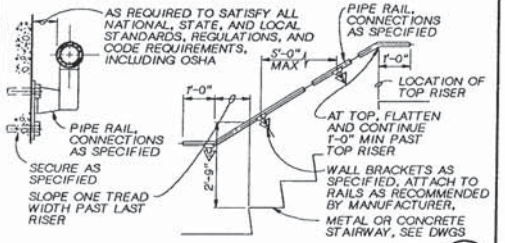

WALL HANDRAIL (228)
NTS (ALUMINUM)

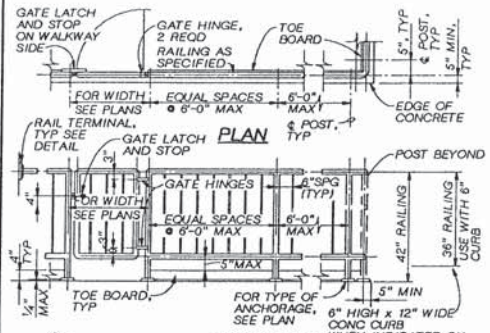

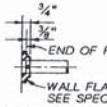

RAIL TERMINAL

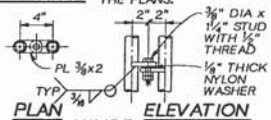

PLAN ELEVATION

HINGE

NOTES:

1. FASTEN RAIL TO WALL FLANGE PER MANUFACTURERS RECOMMENDATIONS.
2. WALL FLANGE TO BE MOUNTED TO WALL WITH 2 - ⅜" DIA SST WEDGE ANCHORS.

NOTE: AT CONTRACTOR'S OPTION FABRICATE HINGES OR PROVIDE OTHER HINGES AS SPECIFIED. ANODIZE AFTER ALL WELDING AS SPECIFIED.

RAILING
NTS

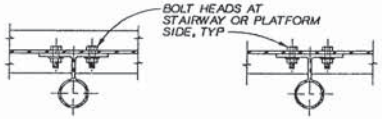

PLAN

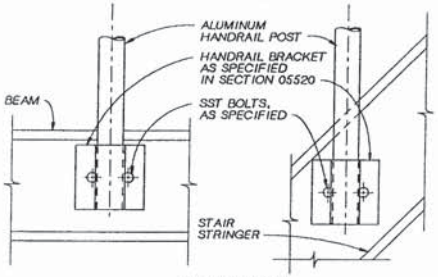

ELEVATION

NOTE:
PROVIDE PROTECTION FOR DISSIMILAR METALS AND CONCRETE PER SPECIFICATIONS.

POST ANCHORAGE TYPE "C"
(ALUMINUM)

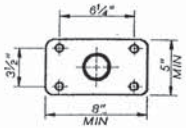

PLAN

NOTE:
PROVIDE PROTECTION FOR DISSIMILAR METALS AND CONCRETE PER SPECIFICATIONS.

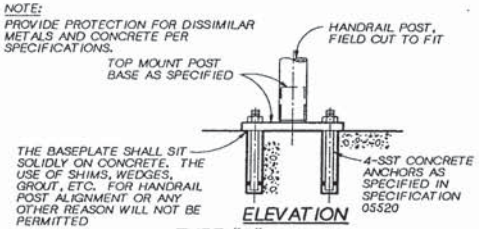

ELEVATION

TYPE "A"

HANDRAIL POST ANCHORAGE
NTS

COVER PLATE

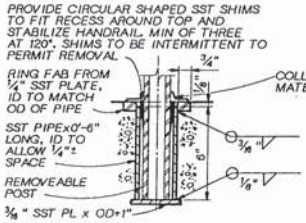

NOTE:
PROVIDE COVER PLATE FOR EACH ANCHORAGE SLEEVE.

TYPE "B"

HANDRAIL POST ANCHORAGE (229)
NTS

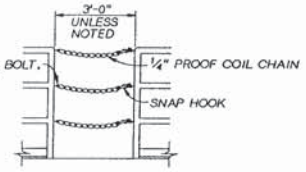

SAFETY CHAIN (230)
NTS (GALVANIZED & STAINLESS STEEL)

KAREN A. HOOD — REGISTERED PROFESSIONAL ENGINEER

CH2M HILL

DSGN	R FRIBERG		
DR	R FRIBERG		
CHK	L ARAGON		
APVD	K HOOD	NO.	DATE

REVISION | BY | APVD

REUSE OF DOCUMENTS
THIS DOCUMENT, AND THE IDEAS AND DESIGNS INCORPORATED HEREIN, AS AN INSTRUMENT OF PROFESSIONAL SERVICE, IS THE PROPERTY OF CH2M HILL AND IS NOT TO BE USED, IN WHOLE OR IN PART, FOR ANY OTHER PROJECT WITHOUT THE WRITTEN AUTHORIZATION OF CH2M HILL.
©CH2M HILL

BAR IS ONE INCH ON ORIGINAL DRAWING. 0 1"
IF NOT ONE INCH ON THIS SHEET, ADJUST SCALES ACCORDINGLY.

CITY OF WENATCHEE, WASHINGTON
WASTEWATER TREATMENT PLANT IMPROVEMENTS

STANDARD DETAILS
STRUCTURAL STANDARD DETAILS

DWG NO. 250-D-9
DATE NOV. 1990
PROJ. NO. SEA24579.N1

DATE: 11-06-90
DRAWN BY: R. FRIBERG DESIGNED BY: R. FRIBERG
DGN NAME: O:/PROJ2/WENATCHE/WE2500-J.DGN

1. FOR MATERIALS USED FOR STAIRWAY, SEE PLANS AND OR SPECS. USE C10x15.3 FOR STEEL STRINGERS AND C12x7.41 FOR ALUMINUM STRINGERS.
2. STAIR HANDRAIL NOT SHOWN.

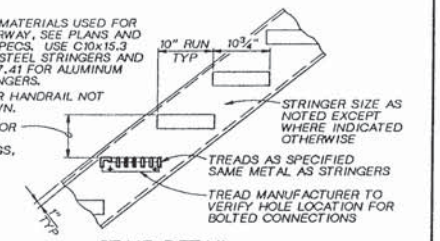

STAIR DETAIL

STAIRWAY WIDTH	BEARING BARS	
	ALUMINUM TREAD	STEEL TREAD
2'-3" OR LESS	1"x3/16"	3/4"x3/16"
2'-9" OR LESS	1¼"x3/16"	1"x3/16"
3'-3" OR LESS	1½"x3/16"	1¼"x3/16"
4'-7" OR LESS	1¾"x3/16"	1½"x3/16"

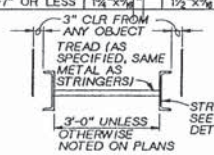

STAIR TREADS

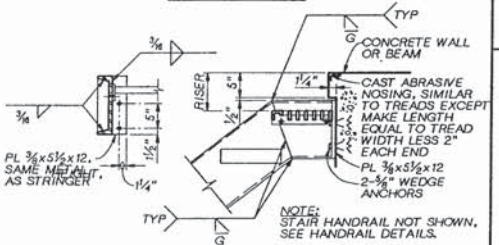

NOTE: STAIR HANDRAIL NOT SHOWN, SEE HANDRAIL DETAILS.

STAIR TOP CONNECTION

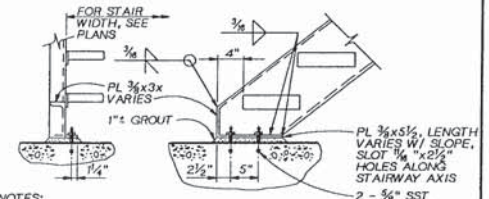

NOTES:
1. USE BASE PL OF SAME METAL AS STRINGER.
2. PROVIDE PROTECTION FOR DISSIMILAR METALS AND CONCRETE AS SPECIFIED.
3. STAIR HANDRAIL NOT SHOWN.

STAIR BOTTOM CONN

METAL STAIR DETAILS

NTS

231

GRATING NOTES

1. EXTEND GRATING CONTINUOUSLY OVER GATE GUIDES AND GATES.
2. NOTCH GRATING SUPPORTS AT GATES AS REQUIRED.
3. GRATING SPAN ⟷ SEE PLAN.
4. WIDTH OF GRATING SECTIONS SHALL NOT EXCEED 3'-0".
5. SHOP DRAWINGS BASED ON FIELD DIMENSIONS SHALL BE SUBMITTED TO THE ENGINEER PRIOR TO FABRICATION.
6. MATERIAL FOR SUPPORTS OF STEEL AND ALUMINUM GRATING TO BE SAME AS GRATING, EXCEPT METAL SUPPORTS THAT ARE TO BE EMBEDDED IN CONCRETE SHALL BE TYPE 316 STAINLESS STEEL.
7. UNLESS NOTED OTHERWISE ON PLANS, GRATING THICKNESS SHALL BE AS TABULATED IN "GRATING THICKNESS TABLE" FOR APPLICABLE TRAFFIC.
8. BEARING BAR THICKNESS FOR GRATING TO BE 3/16" MINIMUM.
9. BAND ALL EDGES WITH 3/16 x DEPTH OF BEARING BAR.
10. PROVIDE MISCELLANEOUS GRATING FASTENERS AS REQUIRED.
11. TYPE OF MATERIAL USED SHALL BE AS SHOWN ON PLANS OR AS SPECIFIED. THIS STANDARD DETAIL INCLUDES 3 TYPES, ALTHOUGH ALL 3 MAY NOT BE INCLUDED IN PROJECT.
12. THE HORIZONTAL CLEARANCE BETWEEN THE GRATING AND GRATING SUPPORTS SHALL NOT BE LESS THAN ¼" NOR GREATER THAN ½" AND AS SPECIFIED.
13. ALL GRATING SECTIONS, WHEN IN PLACE, SHALL ALWAYS BE FIRMLY ANCHORED TO THEIR SUPPORTS AS SPECIFIED.

FOOT TRAFFIC

GRATING THICKNESS TABLE

MAXIMUM SPAN	ALUMINUM (IN.)	STEEL (IN.)	FIBERGLASS (IN.)
3'-6"	1¼"	1"	1½"
4'-0"	1½"	1"	1½"
4'-6"	1¾"	1"	1½"
5'-0"	1¾"	1¼"	MAXIMUM ALLOWABLE SPAN IS 4'-6" LIMIT DEFLECTION TO ¼" MAX
5'-6"	2"	1¼"	
6'-0"	2¼"	1½"	
6'-6"	2¼"	1½"	
7'-0"	2½"	1¾"	

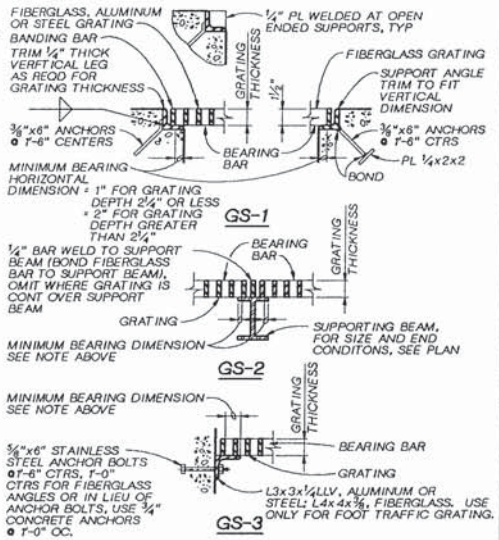

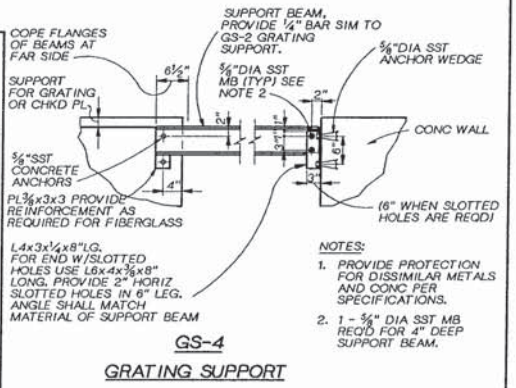

NOTES:
1. PROVIDE PROTECTION FOR DISSIMILAR METALS AND CONC PER SPECIFICATIONS.
2. 1 - 5/8" DIA SST MB REQD FOR 4" DEEP SUPPORT BEAM.

GS-4

GRATING SUPPORT

GRATING SUPPORT

NTS

233

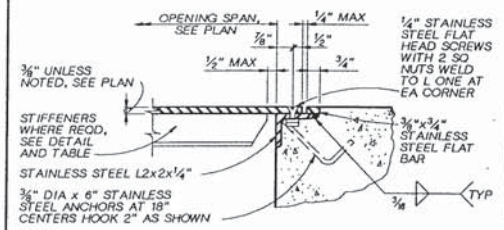

NOTE:
THIS DETAIL APPLIES AT OPENINGS WHOSE LARGER SIDE IS LARGER THAN 2'-6" AND AIR TIGHTNESS IS NOT REQUIRED.

TYPE "B"

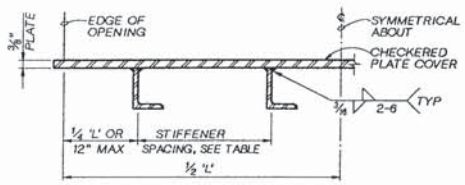

NOTES:
1. STIFFENERS TO BE PLACED LONG LEG VERTICAL.
2. STIFFENER TO BE PARALLEL TO THE SHORT EDGE OF OPENING.
3. MAXIMUM ALLOWABLE UNIFORM DESIGN LOAD = 300psf

TABLE		
SHORT SPANS	STIFFENER SIZES	MAXIMUM SPACING
3'-0"	L2x1½x¼	1'-6"
3'-6"	L2x1½x¼	1'-6"
4'-0"	L2x1½x¼	1'-3"
4'-6"	L2½x1½x¼	1'-6"
5'-0"	L2½x1½x¼	1'-3"

COVER STIFFENERS

NOTES:
1. COVER PLATE TYPES 'A', 'B', AND 'C' AND STIFFENERS ARE ALUMINUM PLATES AND ANGLES.
2. ALL COVER PLATES TO HAVE APPLICABLE LIFTING EYES AS SHOWN IN LIFTING EYE DETAILS.

SLAB OPENING COVER & SUPPORTS

NTS

234

KAREN A. HOOD, STATE OF WASHINGTON, REGISTERED PROFESSIONAL ENGINEER

CH2M HILL

DSGN	R FRIBERG
DR	R FRIBERG
CHK	L ARAGON
APVD	K HOOD

NO.	DATE	REVISION	BY	APVD

REUSE OF DOCUMENTS
THIS DOCUMENT, AND THE IDEAS AND DESIGNS INCORPORATED HEREIN, AS AN INSTRUMENT OF PROFESSIONAL SERVICE, IS THE PROPERTY OF CH2M HILL AND IS NOT TO BE USED, IN WHOLE OR IN PART, FOR ANY OTHER PROJECT WITHOUT THE WRITTEN AUTHORIZATION OF CH2M HILL.
©CH2M HILL

BAR IS ONE INCH ON ORIGINAL DRAWING.
0 1"
IF NOT ONE INCH ON THIS SHEET, ADJUST SCALES ACCORDINGLY.

CITY OF WENATCHEE, WASHINGTON
WASTEWATER TREATMENT PLANT IMPROVEMENTS

STANDARD DETAILS
STRUCTURAL STANDARD DETAILS

DWG NO. 250-D-10
DATE NOV. 1990
PROJ NO. SEA24579.N1

DATE: 11-06-90 DLC
DRAWN BY: R. FRIBERG DESIGNED BY: R. FRIBERG
DGN NAME: O:/PROJ2/WENATCHE/WE2500-K.DGN

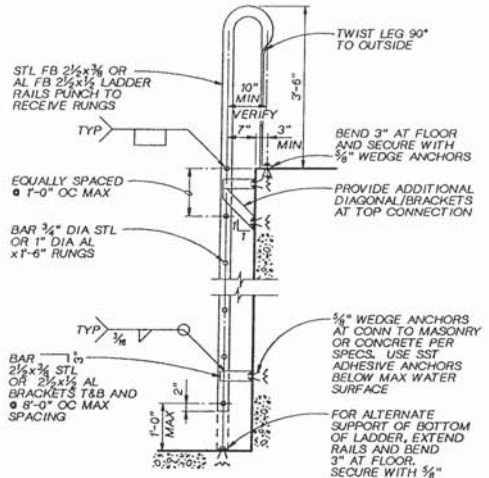

NOTES:
PROVIDE PROTECTION FOR DISSIMILAR METALS AND CONCRETE PER SPECIFICATIONS.

LADDER (235)
NTS

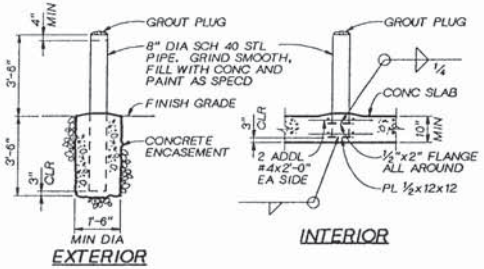

GUARD POST (237)
NTS

NOMINAL BEAM DEPTH, INCHES	ROWS OF BOLTS	LENGTH [3] OF ANGLE
36	7	1'-8½"
30-33	6	1'-5½"
24-27	5	1'-2½"
16-21	4	11½"
12-15	3	8½"
8-10	2	5½"
6	1	3"

NOTES:
1. NUMBER OF ROWS IS EQUAL TO NUMBER OF BOLTS TO ENCLOSED WEB.
2. ALL FRAMING CONNECTIONS SHALL CONFORM TO SCHEDULE UNLESS DETAILED OTHERWISE ON FRAMING PLANS.
3. ADD 1½" TO ANGLE LENGTH FOR STAGGERED BOLT CONNECTIONS.

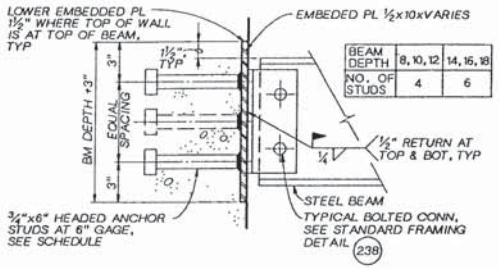

BEAM DEPTH	8, 10, 12	14, 16, 18
NO. OF STUDS	4	6

EMBEDDED CONNECTION (239)
NTS

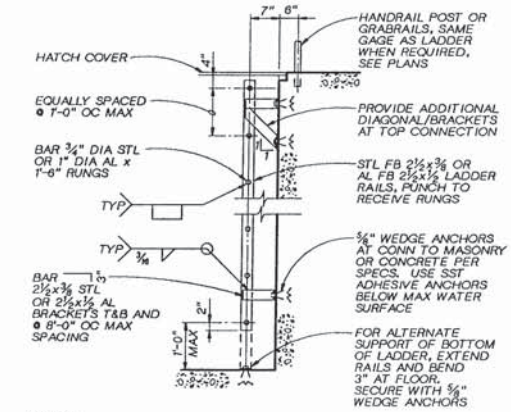

NOTES:
PROVIDE PROTECTION FOR DISSIMILAR METALS AND CONCRETE PER SPECIFICATIONS.

LADDER (236)

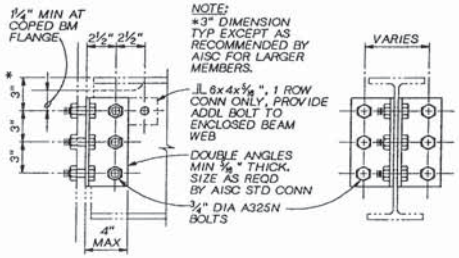

TYPICAL FRAMING CONNECTION (238)
NTS

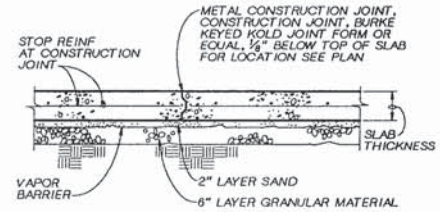

SLAB ON GRADE (240)
NTS

DSGN	R FRIBERG				
DR	R FRIBERG				
CK	L ARAGON				
APVD	K HOOD	NO.	DATE	REVISION	BY	APVD

CH2M HILL

REUSE OF DOCUMENTS
THIS DOCUMENT, AND THE IDEAS AND DESIGNS INCORPORATED HEREIN, AS AN INSTRUMENT OF PROFESSIONAL SERVICE, IS THE PROPERTY OF CH2M HILL AND IS NOT TO BE USED, IN WHOLE OR IN PART, FOR ANY OTHER PROJECT WITHOUT THE WRITTEN AUTHORIZATION OF CH2M HILL.
©CH2M HILL

BAR IS ONE INCH ON ORIGINAL DRAWING. 0 1" IF NOT ONE INCH ON THIS SHEET, ADJUST SCALES ACCORDINGLY.

CITY OF WENATCHEE, WASHINGTON
WASTEWATER TREATMENT PLANT IMPROVEMENTS

STANDARD DETAILS
STRUCTURAL STANDARD DETAILS

DWG NO. 250-D-11
DATE NOV. 1990
PROJ NO. SEA24579.N1

DATE: 10-26-90 CJB
DRAWN BY: J. BROWN DESIGNED BY:
DGN NAME: 0:/PROJ2/WENATCHE/WE2500-L.DGN

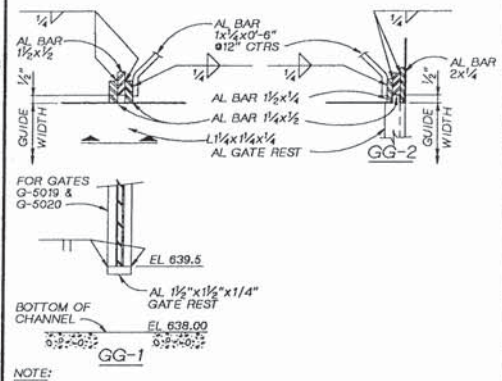

NOTE:
WHERE APPLICABLE EXTRUDED GUIDE SECTIONS AS MANUFACTURED BY WASHINGTON ALUMINUM CO, BALTIMORE, MARYLAND MAY BE SUBSTITUTED.

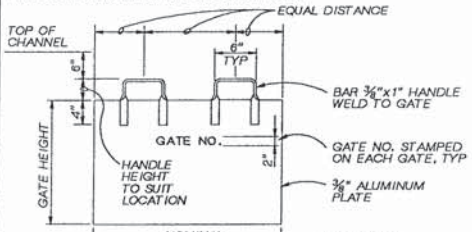

GATE AND GATE GUIDE NOTES:

1. COAT ALL ALUMINUM SURFACES EMBEDDED IN OR IN DIRECT CONTACT WITH CONCRETE WITH ONE COAT OF BITUMASTIC, ACCORDING TO SPECIFICATIONS.
2. ON GATES LESS THAN 3'-0" WIDE, LOCATE ONLY ONE HANDLE AT CENTER OF GATE.
3. ALL GATES TO BE ALUMINUM AS SPECIFIED.
4. ALL GUIDES, ANCHORS AND GATE RESTS TO BE ALUMINUM AS SPECIFIED.
5. GUIDES TO BE ASSEMBLED AS A COMPLETE UNIT. AFTER FABRICATION AND PRIOR TO SHIPMENT THEY SHALL BE CROSS-BRACED TO ASSURE TRUE ALIGNMENT.
6. GUIDES TO BE CONTINUOUS WELDED TO GATE RESTS.
7. ANCHORS FOR GATE RESTS TO BE SIMILAR TO THOSE FOR GUIDES.
8. GATE GUIDES TO BE FLUSH WITH BOTTOM OF GRATING SUPPORTS WHERE UNDER GRATING.
9. GRATING, WHERE OVER GATES, IS TO BE EXTENDED CONTINUOUSLY OVER GUIDES AND GATES.
10. GRATING SUPPORTS TO BE NOTCHED AS REQUIRED TO CLEAR GATES.

HAND STOP GATES, BAFFLE GATES & GATE GUIDE DETAILS

NTS

300

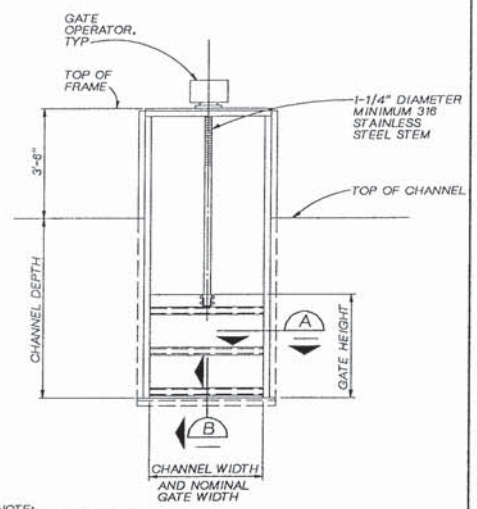

NOTE:
SEE GATE SCHEDULE IN SPECS.

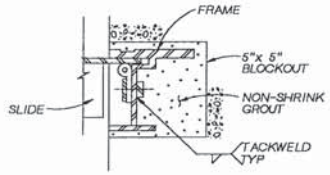

SECTION A

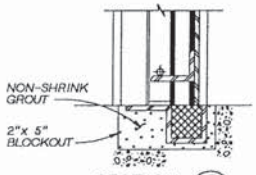

SECTION B

SLIDE GATE

NTS

301

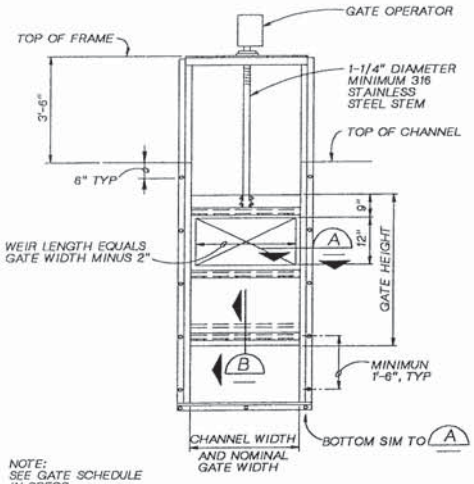

NOTE:
SEE GATE SCHEDULE IN SPECS.

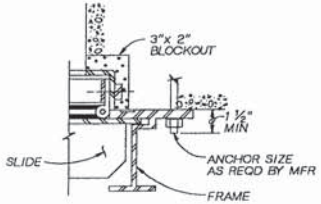

SECTION A

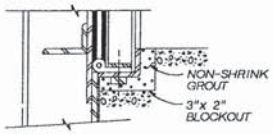

SECTION B

WEIR GATE

NTS

302

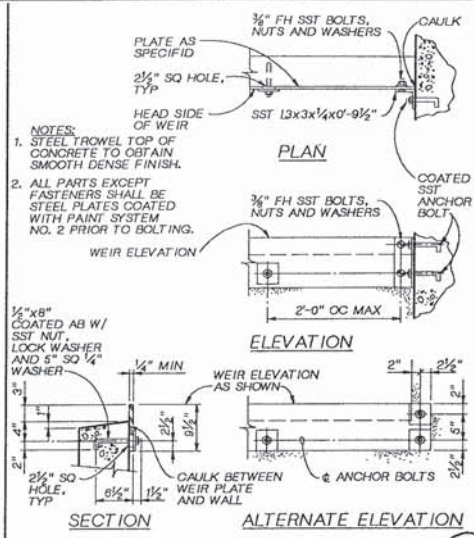

NOTES:
1. STEEL TROWEL TOP OF CONCRETE TO OBTAIN SMOOTH DENSE FINISH.
2. ALL PARTS EXCEPT FASTENERS SHALL BE STEEL PLATES COATED WITH PAINT SYSTEM NO. 2 PRIOR TO BOLTING.

STRAIGHT EDGE WEIR

NTS

303

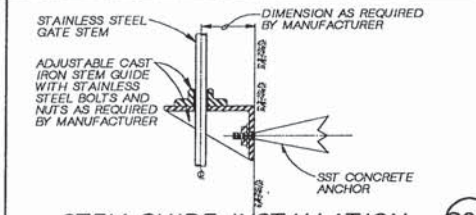

STEM GUIDE INSTALLATION

NTS

304

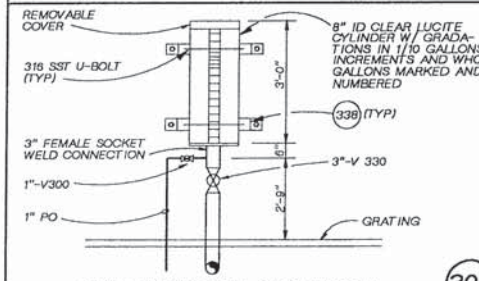

CALIBRATION CYLINDER

NTS

305

DSGN	T. CASHER			
DR	J. BROWN			
CHK	R. STAEHLIN			
APVD	K HOOD	NO.	DATE	REVISION	BY	APVD

CH2M HILL

REUSE OF DOCUMENTS
THIS DOCUMENT, AND THE IDEAS AND DESIGNS INCORPORATED HEREIN, AS AN INSTRUMENT OF PROFESSIONAL SERVICE, IS THE PROPERTY OF CH2M HILL AND IS NOT TO BE USED, IN WHOLE OR IN PART, FOR ANY OTHER PROJECT WITHOUT THE WRITTEN AUTHORIZATION OF CH2M HILL.
©CH2M HILL

BAR IS ONE INCH ON ORIGINAL DRAWING.
0 1"
IF NOT ONE INCH ON THIS SHEET, ADJUST SCALES ACCORDINGLY.

CITY OF WENATCHEE, WASHINGTON
WASTEWATER TREATMENT PLANT IMPROVEMENTS

MECHANICAL
STANDARD DETAILS

DWG NO. 250-D-12
DATE NOVXX 1990
PROJ NO. SEA24579.N1

DATE: 10-25-90 CJB
DRAWN BY: J. BROWN DESIGNED BY:
DGN NAME: O:/PROJ2/WENATCHE/ WE2600-M.DGN

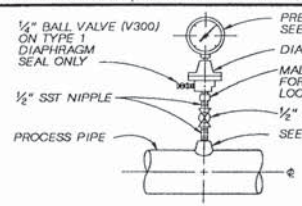

DIAPHRAGM PRESSURE GAUGE, TYPE 2

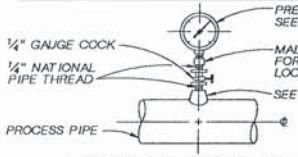

PRESSURE GAUGE, TYPE 1

NOTES:

1. FOR STEEL, GALVANIZED STEEL, AND PVC 2 1/2" AND SMALLER USE A BUSHING IN A TEE.
2. FOR DUCTILE IRON AND FIBERGLASS REINFORCED PLASTIC PIPE, ALL SIZES, USE PIPE SADDLE WITH BUSHING.
3. FOR STEEL AND STAINLESS STEEL PIPES 3" AND LARGER, AND PRESSURE VESSELS, USE THRED-O-LET AS SHOWN.
4. PROVIDE SNUBBER FOR ALL PUMP INSTALLATIONS

PRESSURE GAUGE MOUNTING DETAILS (306)

NTS

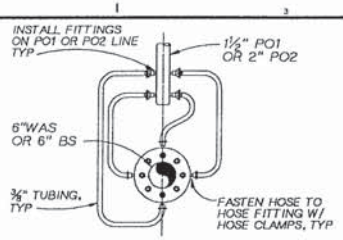

SECTION

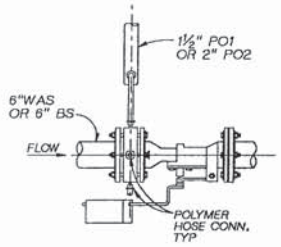

PLAN

POLYMER MIXER DETAIL (309)

NTS

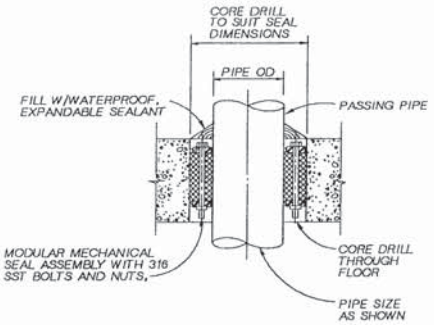

FLOOR PENETRATION SEAL (311)

NTS

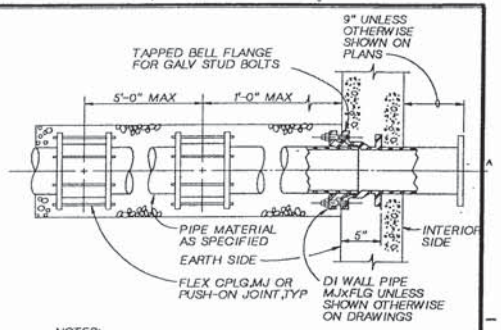

NOTES:

1. COAT WALL PIPE W/ SPECIFIED PAINT SYSTEM PRIOR TO CONCRETE PLACEMENT.
2. FOR WALL PIPE INSTALLATION IN EXISTING WALLS CONTRACTOR SHALL BREAKOUT CONCRETE HOLE SIZE OF WALL PIPE SEEP RING DIA PLUS 2" W/ MINIMAL REMOVAL OF EXST REINFORCING STEEL. THE EXST CONCRETE SHALL BE COATED W/ A WATERPROOF CONCRETE ADHESIVE PRIOR TO INSTALLATION OF A NON-SHINK GROUT, DRY PACKED FROM THE EARTH SIDE OF THE WALL.
3. GILSULATE BITUMINUOS MATERIAL ALSO REQUIRED AROUND CONCRETE ENCASED PIPE.

WALL PIPE (314)

NTS

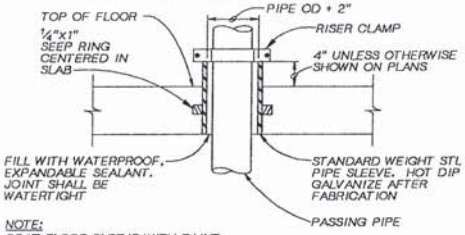

NOTE:
COAT FLOOR SLEEVE WITH PAINT SYSTEM NO. 2A BEFORE CONCRETE PLACEMENT.

FLOOR SLEEVE (312)

NTS

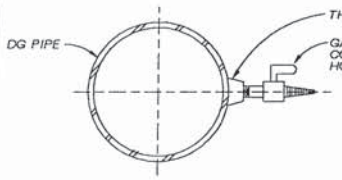

DIGESTER GAS SAMPLING TAP (307)

NTS

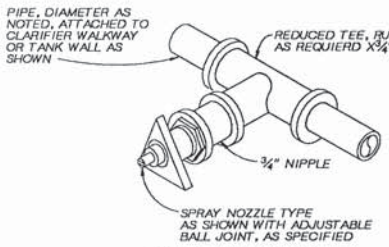

SPRAY NOZZLE (308)

NTS

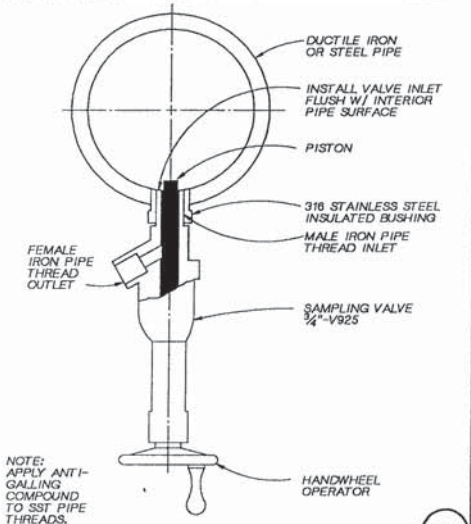

SAMPLING VALVE (310)

NTS

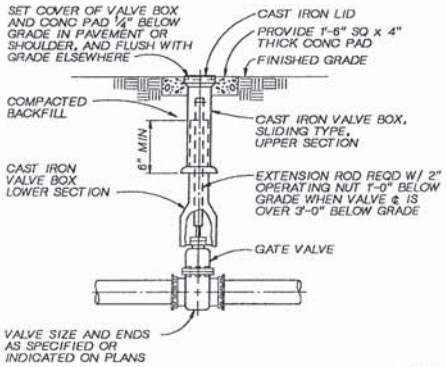

BURIED GATE VALVE BOX (313)

NTS

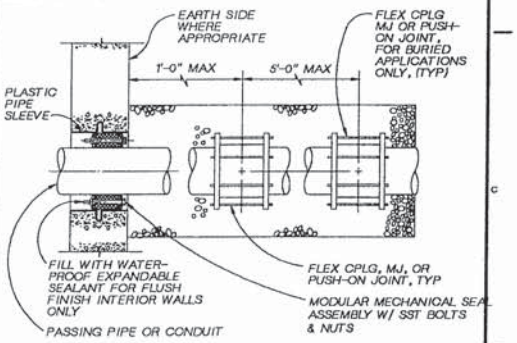

NOTE:
WHERE PIPING OR CONDUIT PENETRATES EXSTING CONCRETE WALL, WALL MAY BE CORE DRILLED AND MODULAR MECHANICAL SEAL ASSEMBLY INSTALLED W/ SST BOLTS AND NUTS. SIZE OF CORE DRILL AS RECOMENDED BY SEAL MFR.

WALL PENETRATION SEAL DETAIL (315)

NTS

KAREN A. HOOD — STATE OF WASHINGTON — REGISTERED PROFESSIONAL ENGINEER

CH2M HILL

DSGN	T. HILDRETH
DR	J. BROWN
CHK	R. STAEHLIN
APVD	K HOOD

NO.	DATE	REVISION	BY	APVD

REUSE OF DOCUMENTS
THIS DOCUMENT, AND THE IDEAS AND DESIGNS INCORPORATED HEREIN, AS AN INSTRUMENT OF PROFESSIONAL SERVICE, IS THE PROPERTY OF CH2M HILL AND IS NOT TO BE USED, IN WHOLE OR IN PART, FOR ANY OTHER PROJECT WITHOUT THE WRITTEN AUTHORIZATION OF CH2M HILL.
©CH2M HILL

BAR IS ONE INCH ON ORIGINAL DRAWING. 0 — 1"
IF NOT ONE INCH ON THIS SHEET, ADJUST SCALES ACCORDINGLY.

CITY OF WENATCHEE, WASHINGTON
WASTEWATER TREATMENT PLANT IMPROVEMENTS

MECHANICAL
STANDARD DETAILS

DWG NO. 250-D-13
DATE NOV. 1990
PROJ NO. SEA24579.N1

DATE: 10-25-90 CJB
DRAWN BY: J. BROWN DESIGNED BY: T. CASHER
DGN NAME: 0:/PROJ2/WENATCHE/WE2500-N.DGN

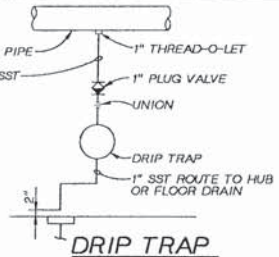

DRIP TRAP (316)
NTS

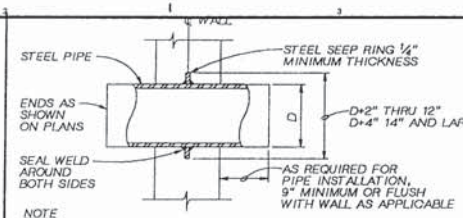

NOTE
1. COAT PIPE W/PAINT SYSTEM NO. 2A PRIOR TOCONCRETE PLACEMENT

STEEL WALL PIPE (319)
NTS

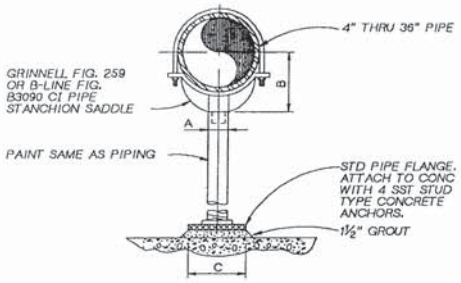

NOTES:
1. PROVIDE HALF ROUND RIGID INSULATION AND INSULATION PROTECTION SHIELD, SIMILAR TO GRINNELL FIGURE 167 OR ELCEN FIGURE 219, WHERE PIPING IS INSULATED.
2. PROVIDE NEOPRENE WAFFLE ISOLATION PAD, SIMILAR TO MASON TYPE 'W' OR KORFUND KORPAD 40, UNDER SUPPORT FOOT WHEN PIPING IS ISOLATED OR SUPPORT IS ADJACENT TO MECHANICAL EQUIPMENT.
3. FOR BASE, HEIGHT AND FLANGE DIMENSIONS, SEE TABLE.
4. HOT DIP GALVANIZE AFTER FABRICATION

DIMENSION TABLE			
PIPE SIZE	A	B	C
4"	3"	4-3/16"	9"
5"	3"	4-13/16"	9"
6"	3"	5-7/16"	9"
8"	3"	6-16/16"	9"
10"	3"	8-7/16"	9"
12"	3"	9-16/16"	9"
14"	4"	10-16/16"	11"
16"	4"	12-3/8"	11"
18"	4"	13-7/8"	11"
20"	6"	15-3/8"	13-1/2"
22"	6"	16-5/8"	13-1/2"
24"	6"	17-15/16"	13-1/2"
26"	6"	19-1/8"	13-1/2"
30"	6"	21-5/16"	13-1/2"
32"	6"	22-1/2"	13-1/2"
36"	6"	24-1/2"	16"

PIPE SUPPORT (322)
NTS

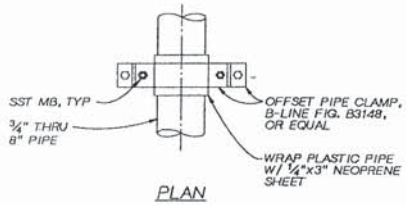

PLAN

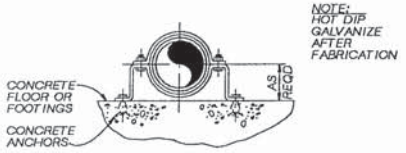

SECTION

PIPE SUPPORT (324)
NTS

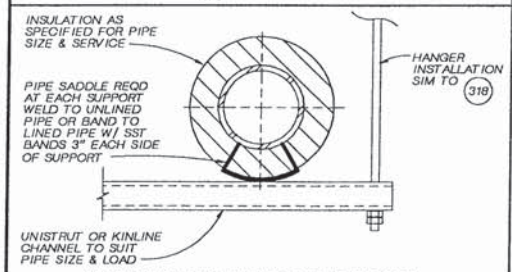

INSULATED PIPE SUPPORT WITH SADDLE (317)
NTS

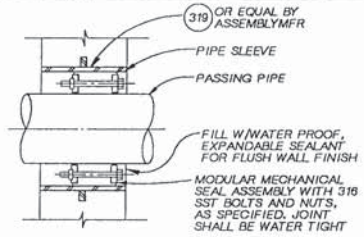

NOTE
1. COAT PIPE W/PAINT SYSTEM NO. 2A PRIOR TOCONCRETE PLACEMENT

WALL PENETRATION SEAL DETAIL (320)
NTS

NOTE:
HOT DIP GALVANIZE AFTER FABRICATION.

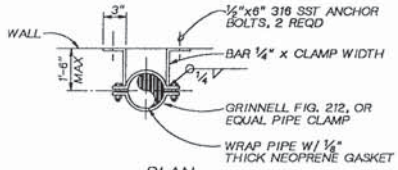

PLAN

PIPE SWAY BRACE (325)
NTS

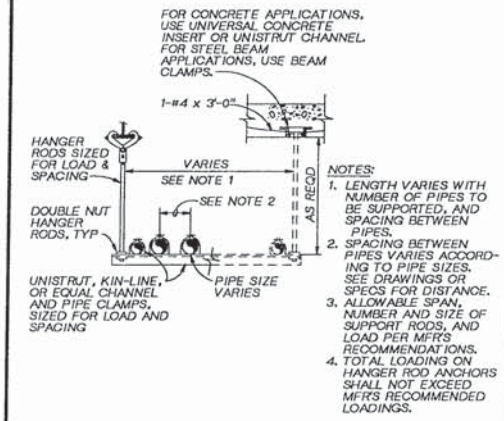

NOTES:
1. LENGTH VARIES WITH NUMBER OF PIPES TO BE SUPPORTED, AND SPACING BETWEEN PIPES.
2. SPACING BETWEEN PIPES VARIES ACCORDING TO PIPE SIZES. SEE DRAWINGS OR SPECS FOR DISTANCE.
3. ALLOWABLE SPAN, NUMBER AND SIZE OF SUPPORT RODS, AND LOAD PER MFR'S RECOMMENDATIONS.
4. TOTAL LOADING ON HANGER ROD ANCHORS SHALL NOT EXCEED MFR'S RECOMMENDED LOADINGS.

TRAPEZE PIPE HANGER (318)
NTS

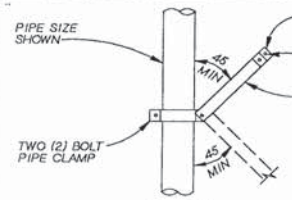

PLAN
NTS

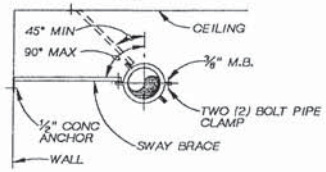

NOTE:
ALL BRACE COMPONENTS SHALL BE HOT DIP GALVANIZED AFTER FABRICATION. SWAY BRACE CAN BE ATTACHED TO PIPE SUPPORTS WHERE MULTIPLE PIPE ARE CARRED ON SINGLE SUPPORTS.

SWAY BRACE (321)
NTS

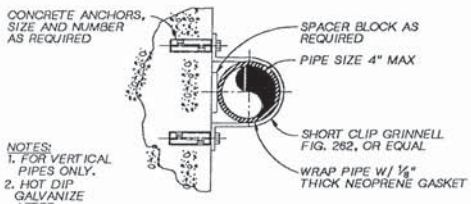

NOTES:
1. FOR VERTICAL PIPES ONLY.
2. HOT DIP GALVANIZE AFTER FABRICATION

PIPE SUPPORT (323)
NTS

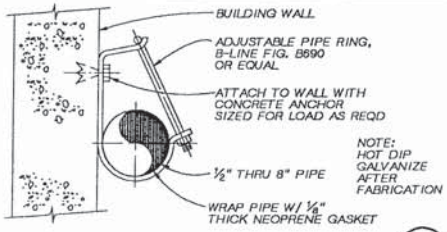

NOTE:
HOT DIP GALVANIZE AFTER FABRICATION

PIPE SUPPORT (326)
NTS

KAREN A. HOOD — STATE OF WASHINGTON — REGISTERED PROFESSIONAL ENGINEER

CH2M HILL

DSGN	T. HILDRETH
DR	J. BROWN
CHK	R. STAEHLIN
APVD	K HOOD

NO.	DATE	REVISION	BY	APVD

REUSE OF DOCUMENTS
THIS DOCUMENT, AND THE IDEAS AND DESIGNS INCORPORATED HEREIN, AS AN INSTRUMENT OF PROFESSIONAL SERVICE, IS THE PROPERTY OF CH2M HILL AND IS NOT TO BE USED, IN WHOLE OR IN PART, FOR ANY OTHER PROJECT WITHOUT THE WRITTEN AUTHORIZATION OF CH2M HILL.
©CH2M HILL

BAR IS ONE INCH ON ORIGINAL DRAWING. 0 1" IF NOT ONE INCH ON THIS SHEET, ADJUST SCALES ACCORDINGLY.

CITY OF WENATCHEE, WASHINGTON
WASTEWATER TREATMENT PLANT IMPROVEMENTS

MECHANICAL
STANDARD DETAILS

DWG NO. 250-D-14
DATE NOV. 1990
PROJ NO. SEA24579.N1

DATE: 10-24-90 CJB
DRAWN BY: J. BROWN DESIGNED BY:
DGN NAME: 0:/PROJ2/WENATCHE/WE2500-0.DGN

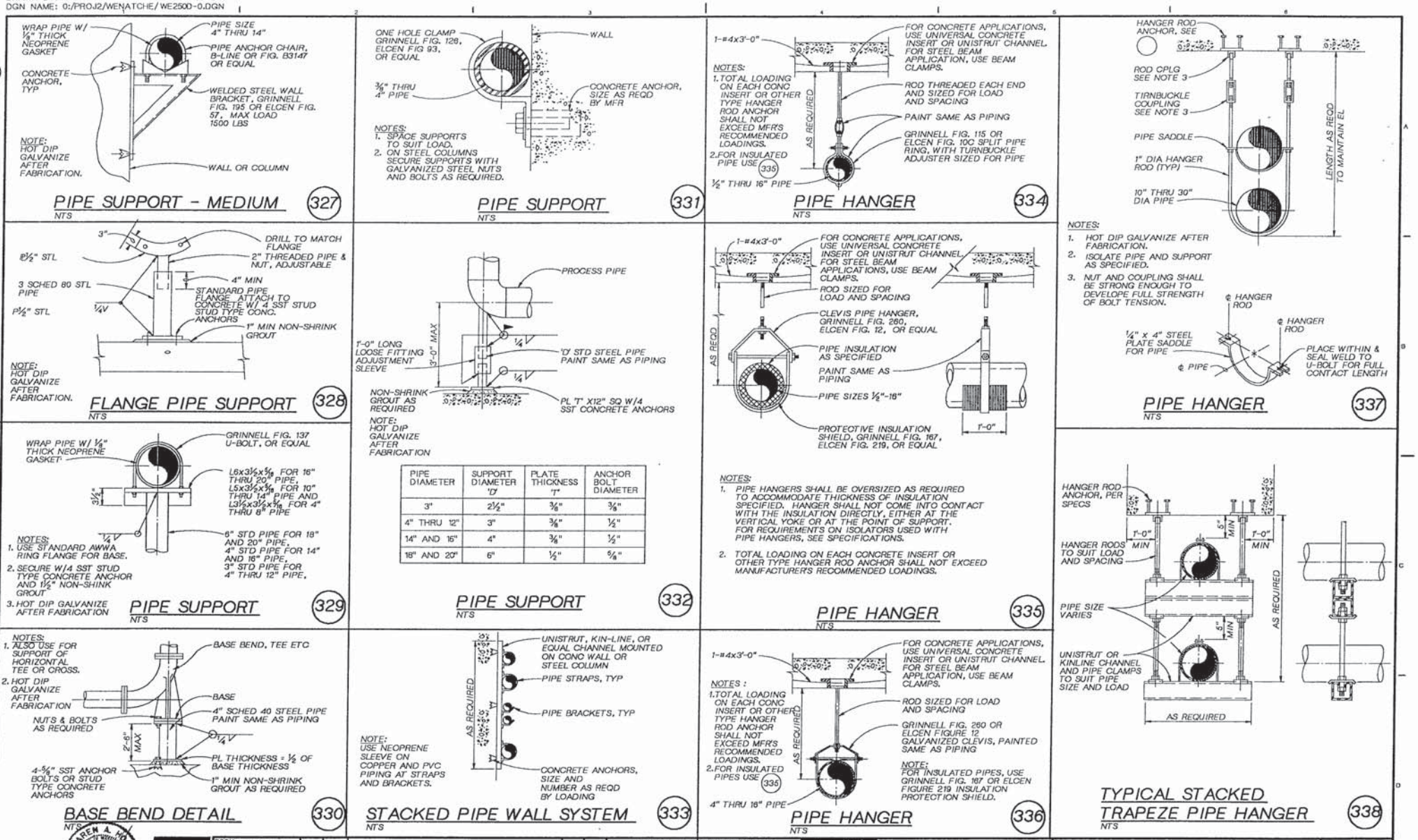

PIPE DIAMETER	SUPPORT DIAMETER 'D'	PLATE THICKNESS 'T'	ANCHOR BOLT DIAMETER
3"	2 1/2"	3/8"	3/8"
4" THRU 12"	3"	3/8"	1/2"
14" AND 16"	4"	3/8"	1/2"
18" AND 20"	6"	1/2"	5/8"

KAREN A. HOOD, STATE OF WASHINGTON, 23411, REGISTERED PROFESSIONAL ENGINEER

CH2M HILL

DSGN	T. CASHER			
DR	J. BROWN			
CHK	R. STAEHLIN			
APVD	K. HOOD	NO.	DATE	REVISION	BY	APVD

REUSE OF DOCUMENTS
THIS DOCUMENT, AND THE IDEAS AND DESIGNS INCORPORATED HEREIN, AS AN INSTRUMENT OF PROFESSIONAL SERVICE, IS THE PROPERTY OF CH2M HILL AND IS NOT TO BE USED, IN WHOLE OR IN PART, FOR ANY OTHER PROJECT WITHOUT THE WRITTEN AUTHORIZATION OF CH2M HILL.
©CH2M HILL

BAR IS ONE INCH ON ORIGINAL DRAWING. 0 1"
IF NOT ONE INCH ON THIS SHEET, ADJUST SCALES ACCORDINGLY.

CITY OF WENATCHEE, WASHINGTON
WASTEWATER TREATMENT PLANT IMPROVEMENTS

MECHANICAL
STANDARD DETAILS

DWG NO. 250-D-15
DATE NOV. 1990
PROJ NO. SEA24579.N1

DATE: 10-24-90 CJB
DRAWN BY: J. BROWN DESIGNED BY: T. CASHER
DGN NAME: O:/PROJ2/WENATCHE/WE2500-P.DGN

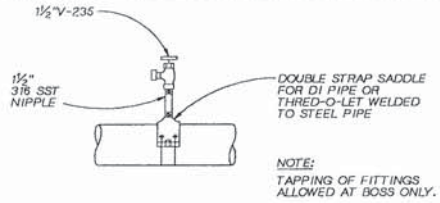

TYPE 1 FLUSHING CONNECTION (339)
NTS

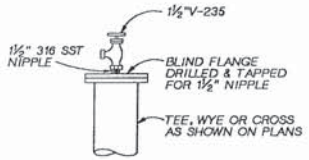

TYPE 2 FLUSHING CONNECTION (340)
NTS

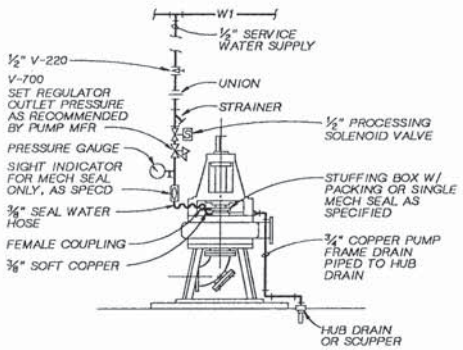

NOTES:
1. USE COPPER TUBE ADAPTERS AND BUSHINGS AS REQUIRED FOR ALL CONNECTIONS TO PUMP.
2. VERTICAL PUMP SHOWN-HORIZONTAL AND PROGRESSING CAVITY PUMP SIMILAR.

PUMP SEAL WATER PIPING (342)
NTS

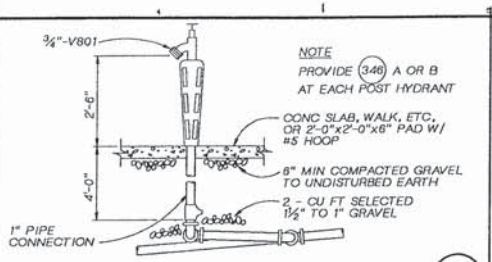

NOTE
PROVIDE (346) A OR B AT EACH POST HYDRANT

NON-FREEZE POST HYDRANT (343)
NTS

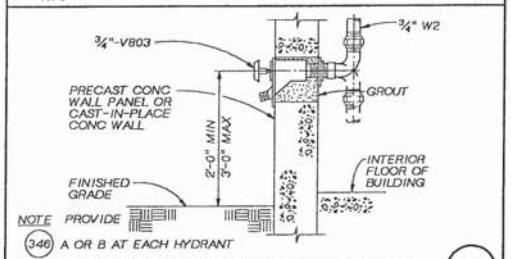

NOTE PROVIDE (346) A OR B AT EACH HYDRANT

NON-FREEZE WALL HYDRANT (344)
NTS

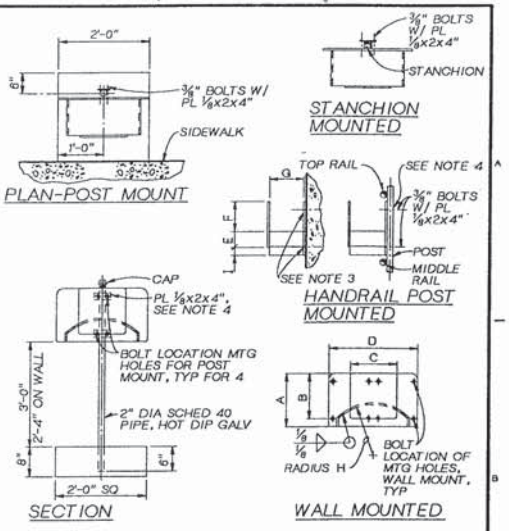

RACK TYPE	DIMENSION IN INCHES								
	A	B	C	D	E	F	G	H	I
TYPE A-¾" & 1" HOSE	10-½	9	9	18	3	6	7-½	9-¾	1-½
TYPE B-1½" HOSE	14	12	12	24	4	8	10	13	2

NOTES:
1. INTERIOR UNITS SHALL BE FABRICATED FROM ⅛" A-36 STEEL PLATE AND ENTIRE UNIT SHALL BE HOT DIP GALVANIZED AFTER FABRICATION.
2. EXTERIOR UNITS SHALL BE FABRICATED FROM ⅜" 6061-T6 ALUMINUM ALLOY PLATE.
3. ATTACH TO CONCRETE WALL WITH (4)-¼" STAINLESS STEEL STUD TYPE WEDGE ANCHORS.
4. ATTACH TO VERTICAL HANDRAIL OR INDIVIDUAL POST WITH PLATES AND (4)-¼" STAINLESS STEEL BOLTS.
5. ATTACH TO STEEL COLUMN WITH (4)-¼" ROUND HEAD BOLTS, ONE IN EACH CORNER. INSERT DOUBLE SPACER NUTS BETWEEN COLUMN AND HOSE RACK.

HOSE RACK DETAILS (346)
NTS

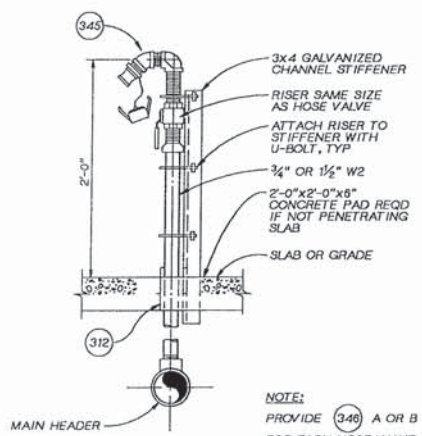

NOTE:
PROVIDE (346) A OR B FOR EACH HOSE VALVE

EXTERIOR HOSE VALVE (341)
NTS

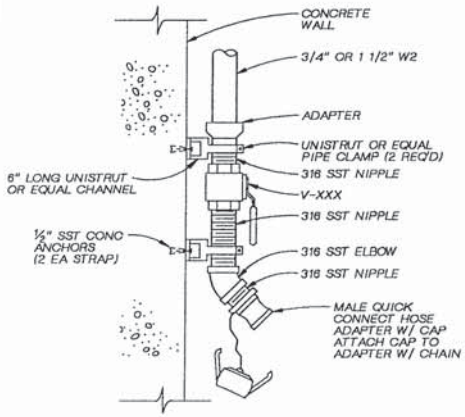

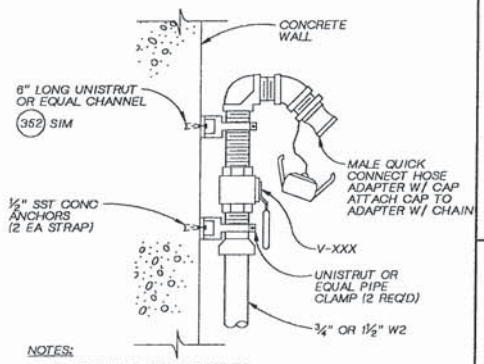

NOTES:
1. VALVE AND FITTINGS SIZED TO MATCH SUPPLY RISER SIZE.
2. LOCATE BALL VALVE 2'-0" ABOVE FINISHED FLOOR.
3. PROVIDE (346) A OR B FOR EACH HOSE VALVE
4. FITTINGS SIMILAR FOR EACH TYPE

INTERIOR HOSE VALVE DETAIL (345)
NTS

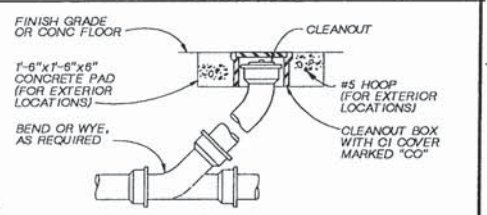

CLEANOUT DETAIL (347)
NTS

KAREN A. HOOD — REGISTERED PROFESSIONAL ENGINEER

CH2M HILL

DSGN	T. CASHER
DR	J. BROWN
CHK	R. STAEHLIN
APVD	K HOOD

NO.	DATE	REVISION	BY	APVD

REUSE OF DOCUMENTS
THIS DOCUMENT, AND THE IDEAS AND DESIGNS INCORPORATED HEREIN, AS AN INSTRUMENT OF PROFESSIONAL SERVICE, IS THE PROPERTY OF CH2M HILL AND IS NOT TO BE USED, IN WHOLE OR IN PART, FOR ANY OTHER PROJECT WITHOUT THE WRITTEN AUTHORIZATION OF CH2M HILL.
©CH2M HILL

BAR IS ONE INCH ON ORIGINAL DRAWING. 0 1"
IF NOT ONE INCH ON THIS SHEET, ADJUST SCALES ACCORDINGLY.

CITY OF WENATCHEE, WASHINGTON
WASTEWATER TREATMENT PLANT IMPROVEMENTS

MECHANICAL
STANDARD DETAILS

DWG NO. 250-D-16
DATE NOV. 1990
PROJ NO. SEA24579.N1

DATE: 11/5/90
DRAWN BY: S.D.GUNDY DESIGNED BY: S.D.GUNDY
DGN NAME: O:/PROJ2/WENATCHE/ WE2500-Q.DGN

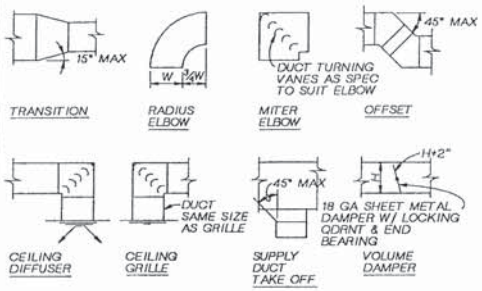

DUCT CONSTRUCTION DETAILS

NTS

GENERAL DUCTWORK NOTES:

1. CEILING DIFFUSERS AND GRILLES ARE TO BE LOCATED IN THE PANELS BETWEEN THE T-BAR GRIDS IN ALL SUSPENDED CEILING SYSTEMS. WHERE REFLECTED CEILING PLANS ARE PROVIDED, LOCATE DIFFUSERS AND GRILLES AS INDICATED.
2. PROVIDE VOLUME DAMPERS FOR EACH GRILLE AT EACH RETURN CONNECTION AND ANY OTHER LOCATIONS INDICATED ON THE DRAWINGS, IN ACCORDANCE WITH TYPICAL DUCT CONSTRUCTION DETAILS ABOVE. DAMPERS TO BE INSTALLED MINIMUM 5'-0" FROM GRILLE, EXCEPT AS NOTED.

348

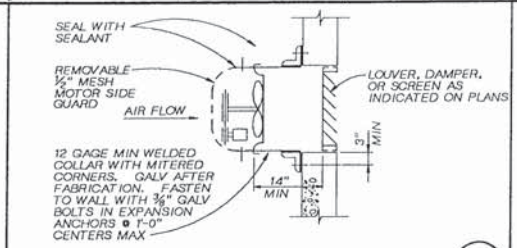

WALL MOUNTED PROPELLER FAN 350

NTS

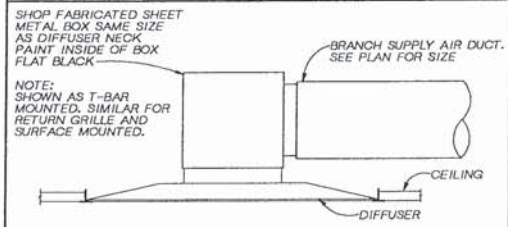

CEILING DIFFUSER-TYPE 1 351

NTS

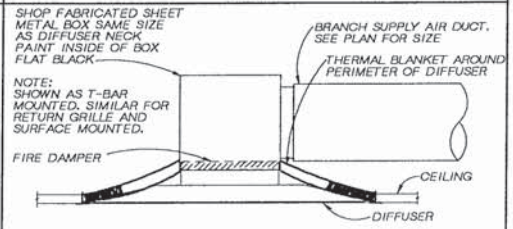

CEILING DIFFUSER-TYPE 2 352

NTS

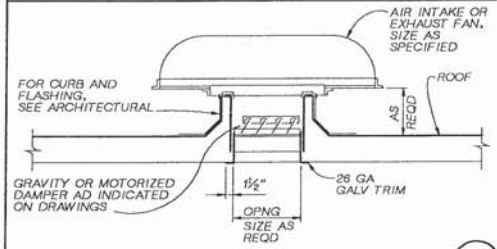

ROOF EXHAUST/INTAKE 353

NTS

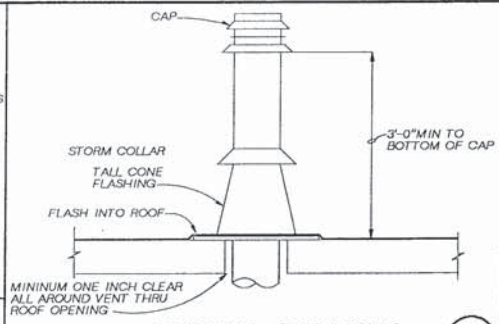

TYPICAL GAS VENT 354

NTS

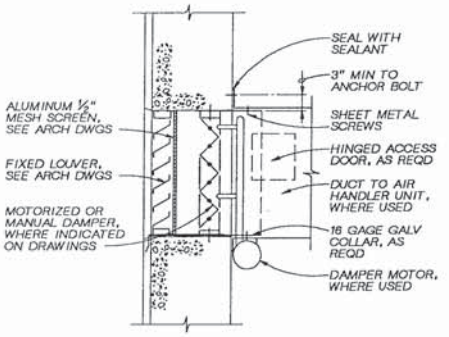

OUTSIDE AIR INTAKE 355

NTS

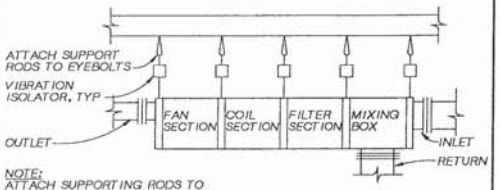

NOTE:
ATTACH SUPPORTING RODS TO UNIT OR SUPPORT FRAME PER MANUFACTURER'S INSTRUCTIONS. MINIMUM OF 6 SUPPORT RODS.

SUSPENDED AIR SUPPLY UNIT 356

NTS

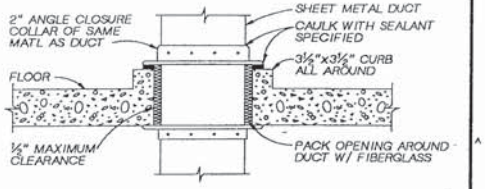

FLOOR PENETRATION-WET AREA 357

NTS

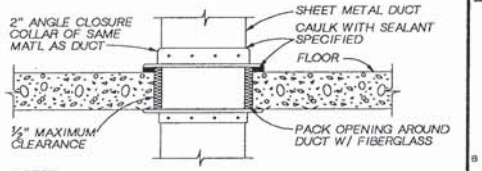

NOTES:
1. WALL PENETRATION SIMILAR.

FLOOR PENETRATION - DRY AREA 358

NTS

349

359

360

KAREN A. HOOD
STATE OF WASHINGTON
REGISTERED PROFESSIONAL ENGINEER

CH2M HILL

DSGN	S.D.GUNDY
DR	S.D.GUNDY
CHK	J.SEIMENS
APVD	K HOOD

NO.	DATE	REVISION	BY	APVD

REUSE OF DOCUMENTS
THIS DOCUMENT, AND THE IDEAS AND DESIGNS INCORPORATED HEREIN, AS AN INSTRUMENT OF PROFESSIONAL SERVICE, IS THE PROPERTY OF CH2M HILL AND IS NOT TO BE USED, IN WHOLE OR IN PART, FOR ANY OTHER PROJECT WITHOUT THE WRITTEN AUTHORIZATION OF CH2M HILL.
©CH2M HILL

BAR IS ONE INCH ON ORIGINAL DRAWING.
0 1"
IF NOT ONE INCH ON THIS SHEET, ADJUST SCALES ACCORDINGLY.

CITY OF WENATCHEE, WASHINGTON
WASTEWATER TREATMENT PLANT IMPROVEMENTS

STANDARD DETAILS
HVAC
STANDARD DETAILS

DWG NO. 250-D-17
DATE NOV. 1990
PROJ NO. SEA24573.N1

DATE: 11/6/90
DRAWN BY: S.D.GUNDY DESIGNED BY: S.D.GUNDY
DGN NAME: O:/PROJ2/WENATCHE/WE250D-T.DGN

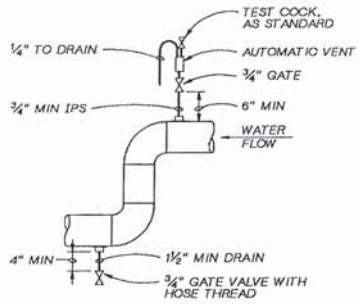

NOTES:
1. TYPICAL FOR ALL HIGH POINTS, LOW POINTS AND POCKETS.
2. LOW POINT DRAINS TO BE 2" MINIMUM ON 6" AND LARGER MAINS.

VENT AND DRAIN (361)
NTS

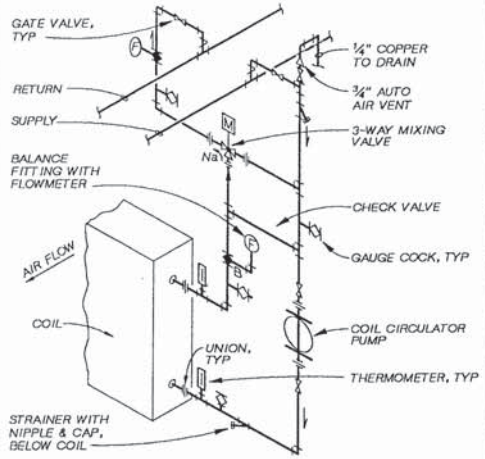

NOTE:
DETAIL GIVES REQUIRED SEQUENCE. PIPING ARRANGEMENT MAY VARY TO SUIT FIELD REQUIREMENTS.

COIL CONNECTION (363)
NTS

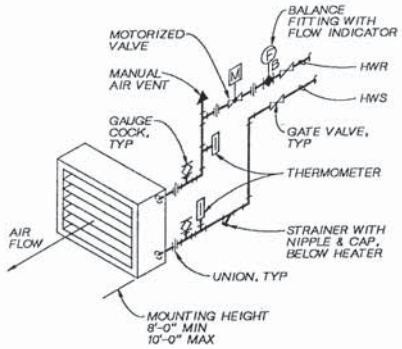

NOTE:
DETAIL GIVES REQUIRED SEQUENCE. PIPING ARRANGEMENT MAY VARY TO SUIT FIELD REQUIREMENTS.

HORIZONTAL UNIT HEATER CONNECTION (365)
NTS

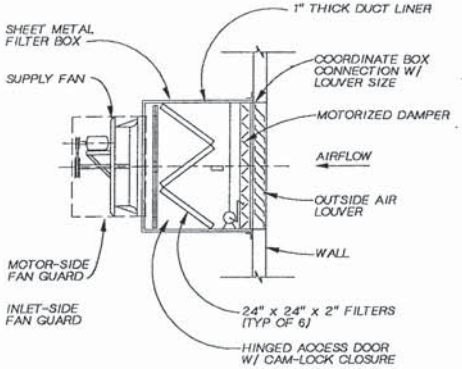

SUPPLY FAN FILTER BOX (368)
NTS

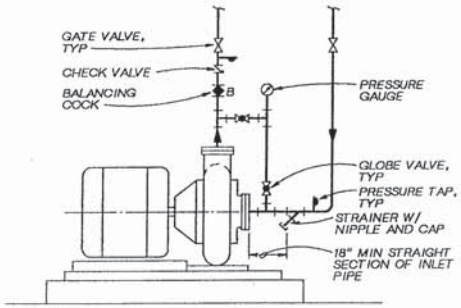

NOTES:
1. DETAIL SIMILAR FOR INLINE PUMPS.
2. FLEXIBLE CONNECTIONS SHALL BE AS SPECIFIED.
3. PUMP SIDE OF GATE VALVE SHALL HAVE UNION IF 2" AND SMALLER, FLANGE IF 2 1/2" AND LARGER.

CIRCULATING PUMP PIPING ARRANGEMENT (362)
NTS

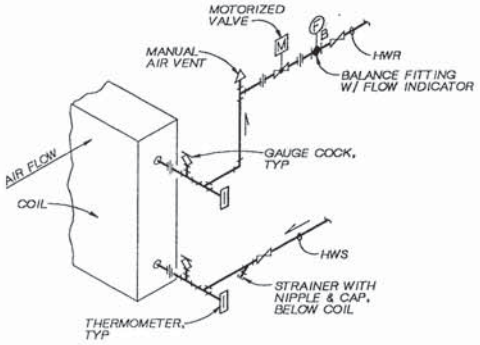

NOTE:
DETAIL GIVES REQUIRED SEQUENCE. PIPING ARRANGEMENT MAY VARY TO SUIT FIELD REQUIREMENTS.

REHEAT COIL CONNECTION (364)
NTS

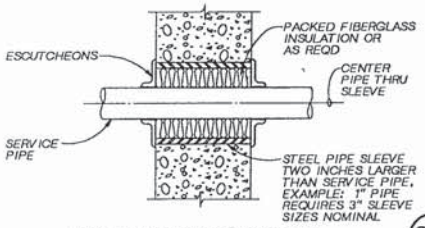

PIPE PENETRATION (366)
NTS

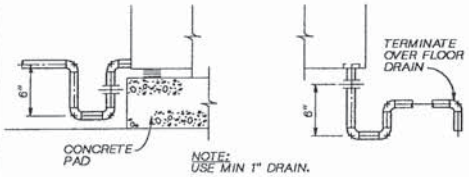

ALTERNATE PREFERRED

COIL DRAIN-PAN PIPING (369)
NTS

(367)

(370)

KAREN A. HOOD PROFESSIONAL ENGINEER

CH2M HILL

DSGN	S.D.GUNDY			
DR	S.D.GUNDY			
CHK	J.SEIMENS			
APVD	K HOOD	NO.	DATE	REVISION	BY	APVD

REUSE OF DOCUMENTS
THIS DOCUMENT, AND THE IDEAS AND DESIGNS INCORPORATED HEREIN, AS AN INSTRUMENT OF PROFESSIONAL SERVICE, IS THE PROPERTY OF CH2M HILL AND IS NOT TO BE USED, IN WHOLE OR IN PART, FOR ANY OTHER PROJECT WITHOUT THE WRITTEN AUTHORIZATION OF CH2M HILL.
©CH2M HILL

BAR IS ONE INCH ON ORIGINAL DRAWING. 0 1" IF NOT ONE INCH ON THIS SHEET, ADJUST SCALES ACCORDINGLY.

CITY OF WENATCHEE, WASHINGTON
WASTEWATER TREATMENT PLANT IMPROVEMENTS

STANDARD DETAILS
HVAC
STANDARD DETAILS

DWG NO. 250-D-18
DATE NOV. 1990
PROJ NO. SEA24579.N1

DATE: 7/10/90
DRAWN BY: S.D.GUNDY DESIGNED BY: S.D.GUNDY
DGN NAME: O:/PROJ2/WENATCHE/WE2500-V.DGN

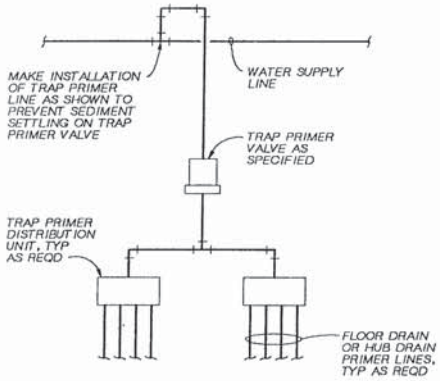

FLOOR DRAIN TRAP PRIMER VALVE DETAIL (371)

NTS

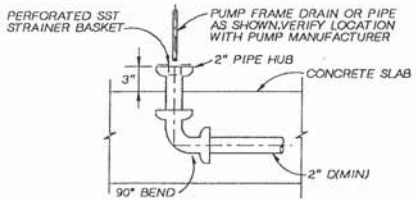

HUB DRAIN DETAIL (374)

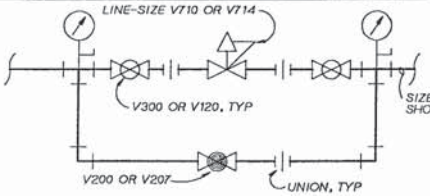

PRESSURE REDUCING VALVE ASSEMBLY DETAIL (375)

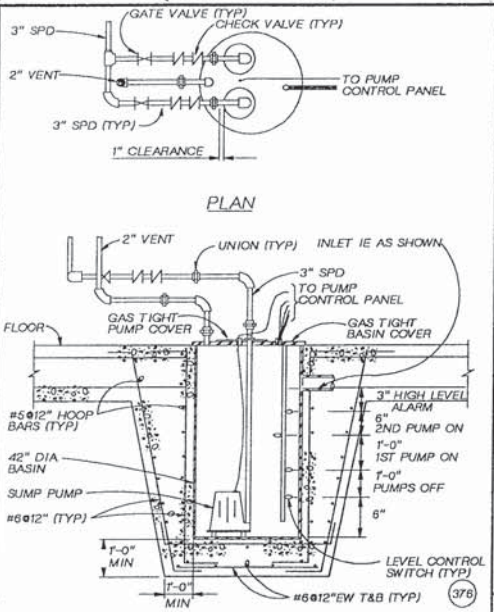

NOTES:
1. STANDARD DETAIL IS GENERAL WITH RESPECT TO PIPING ARRANGEMENT. SEE PLANS FOR SPECIFIC ORIENTATION OF PIPE AND VALVES.
2. SUPPORT PIPING FROM WALL OR FLOOR.

SUMP PUMP (378)

NTS

PLUMBING FIXTURE IDENTIFICATION

EWC	ELECTRIC WATER COOLER
FD	FLOOR DRAIN
KSK	KITCHEN SINK
P	PLUMBING FIXTURE
RD	ROOF DRAIN
SH	SHOWER
SSH	SAFETY SHOWER
SSK	SERVICE SINK
WC	WATER CLOSET
WF	WASH FOUNTAIN
WH	WATER HEATER
UR	URINAL

EXAMPLE: LAV 2
FIXTURE LEGEND
NO. IN SPECIFICATIONS

PLUMBING FIXTURE SCHEDULE

ITEM NO.	DESCRIPTION	DRAIN	VENT	W	HW
EWC	ELECT. WATER COOLER	1½"	1¼"	½"	-
FD-1	FLOOR DRAIN	*	*	½"	-
FD-2	FLOOR DRAIN-GEN. AREAS	*	*	½"	-
FD-3	FLOOR DRAIN	*	*	½"	-
FD-4	FLOOR DRAIN	*	*	½"	-
KSK-1	KITCHEN SINK	2"	1¼"	½"	½"
P-1	MUD ROOM FAUCET	-	-	½"	½"
RD-1	ROOF DRAIN	*	-	-	-
SH-1	SHOWER TRIM	-	-	½"	½"
SSH-1	SAFETY SHOWER	-	-	1½"	-
SSH-2	SAFETY SHOWER	-	-	1½"	-
SSK-1	SERVICE SINK	3"	2"	½"	½"
WC-1	WATER CLOSET-WALL HUNG	3"	2"	½"	-
WF-1	WASH FOUNTAIN	2"	1½"	½"	½"
WH-1	WATER HEATER-80 GAL.-ADMIN.	-	-	¾"	¾"
WH-2	INSTANEOUS WATER HTR-HDWKS	-	-	½"	½"
WH-3	INSTANEOUS WATER HTR-SOLIDS	-	-	½"	½"
WH-4	INSTANEOUS WATER HTR-SOLIDS	-	-	½"	½"
WH-5	INSTANEOUS WATER HTR-SOLIDS	-	-	½"	½"
UR-1	URINAL-WALL HUNG	2"	1½"	¾"	-

NOTE: * INDICATES SIZE AS SHOWN ON DRAWINGS
W CONNECTION ON FLOOR DRAINS IS FOR TRAP PRIMER.

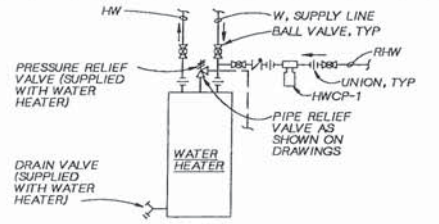

WATER HEATER DETAIL (372)

NTS

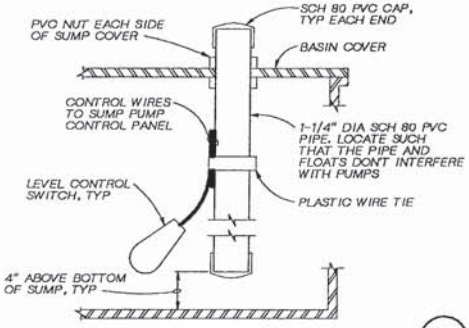

LEVEL SWITCHES SUPPORT PIPE (376)

NTS

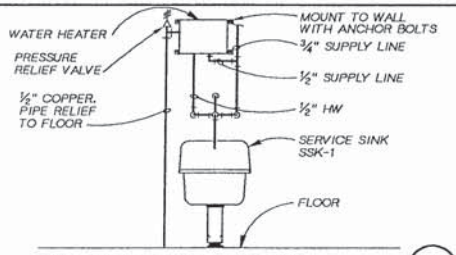

SERVICE SINK DETAIL (373)

NTS

(377)

(379)

KAREN A. HOOD PROFESSIONAL ENGINEER

CH2M HILL

DSGN	S.D.GUNDY
DR	S.D.GUNDY
CHK	J.W.REGER
APVD	K HOOD

NO.	DATE	REVISION	BY	APVD

REUSE OF DOCUMENTS
THIS DOCUMENT, AND THE IDEAS AND DESIGNS INCORPORATED HEREIN, AS AN INSTRUMENT OF PROFESSIONAL SERVICE, IS THE PROPERTY OF CH2M HILL AND IS NOT TO BE USED, IN WHOLE OR IN PART, FOR ANY OTHER PROJECT WITHOUT THE WRITTEN AUTHORIZATION OF CH2M HILL.
©CH2M HILL

BAR IS ONE INCH ON ORIGINAL DRAWING. 0 1"
IF NOT ONE INCH ON THIS SHEET, ADJUST SCALES ACCORDINGLY.

CITY OF WENATCHEE, WASHINGTON
WASTEWATER TREATMENT PLANT IMPROVEMENTS

STANDARD DETAILS
PLUMBING
STANDARD DETAILS

DWG NO. 250-D-19
DATE NOV. 1990
PROJ NO. SEA24579.N1

DATE: 11-4-90 DLC
DRAWN BY: J.BROWN DESIGNED BY: J DUPPONG
DGN NAME: 0:/PROJ2/WENATCHE/ WE2500-U.DGN

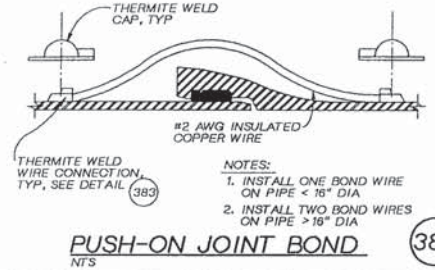

NOTES:
1. INSTALL ONE BOND WIRE ON PIPE < 16" DIA
2. INSTALL TWO BOND WIRES ON PIPE > 16" DIA

PUSH-ON JOINT BOND (381)
NTS

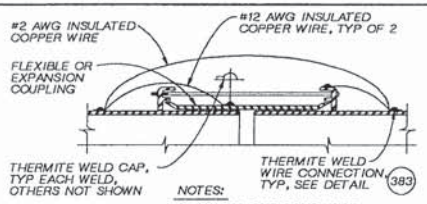

NOTES:
1. INSTALL ONE BOND WIRE ON PIPE < 16" DIA
2. INSTALL TWO BOND WIRES ON PIPE > 16" DIA

FLEXIBLE JOINT BOND (382)
NTS

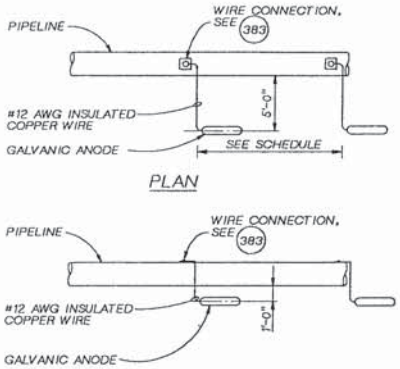

SCHEDULE

PIPE MATERIAL	WIRE CONNECTION	ANODE SPACING
STEEL/GALV STEEL	THERMITE WELD	20 FEET

GALVANIC ANODE INSTALLATION (384)
NTS

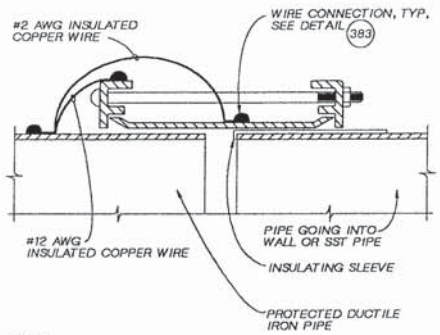

NOTE:
BOND WIRES NOT REQUIRED FOR ABOVE GRADE COUPLINGS

INSULATED FLEXIBLE COUPLING (386)
NTS

NOT USED

(388)

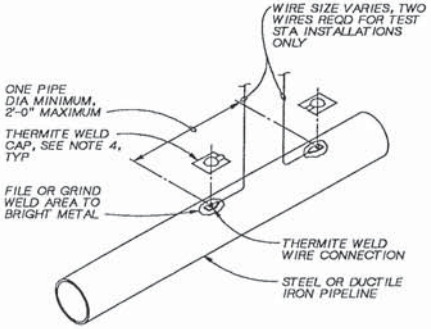

NOTES:
1. COPPER SLEEVE REQUIRED FOR THERMITE WELDING OF #10 AWG AND SMALLER WIRE.
2. USE COPPER SLEEVE ON #2 AWG JOINT BONDING WIRES.
3. WELDER AND CARTRIDGE SIZE VARIES ACCORDING TO WIRE SIZE AND PIPE MATERIAL, CONSULT WELDER MANUFACTURER FOR RECOMMENDED WELDER AND CARTRIDGE.
4. COAT WELD AREA AND FILL RECESS ON THERMITE WELD CAP WITH COLD APPLIED COAL TAR MASTIC AND APPLY CAP TO WELD.

WIRE CONNECTION FOR STEEL AND DUCTILE IRON PIPE (383)
NTS

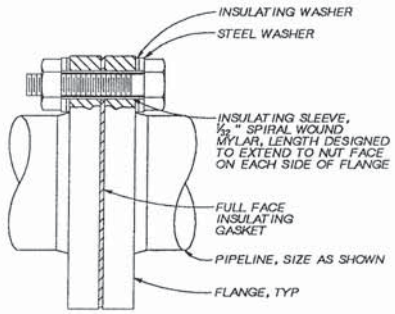

NOTES:
1. INSTALL INSULATING WASHER ON UNPROTECTED SIDE OF FLANGE.
2. COAT WITH COLD APPLIED COAL TAR MASTIC AFTER ASSEMBLING JOINT AND WRAP WITH A BUTYL RUBBER ADHESIVE, POLYETHYLENE BACKED TAPE.

INSULATING FLANGE (385)
NTS

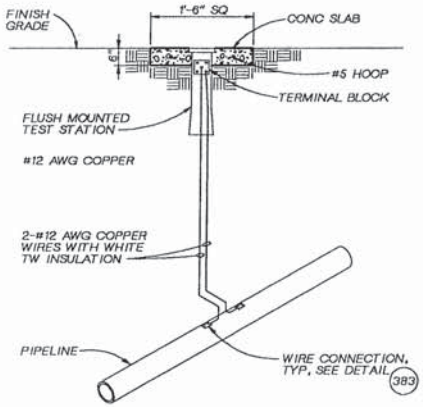

NOTE:
FOR LOCATION SEE 20-C-6, 20-C-7, & 20-C-8

FLUSH MOUNTED TEST STATION (387)
NTS

NOT USED

(389)

DSGN	J DUPPONG				
DR	J BROWN				
CHK	R STAEHLIN				
APVD	K HOOD	NO.	DATE	REVISION	BY	APVD

CH2M HILL

REUSE OF DOCUMENTS
THIS DOCUMENT, AND THE IDEAS AND DESIGNS INCORPORATED HEREIN, AS AN INSTRUMENT OF PROFESSIONAL SERVICE, IS THE PROPERTY OF CH2M HILL AND IS NOT TO BE USED, IN WHOLE OR IN PART, FOR ANY OTHER PROJECT WITHOUT THE WRITTEN AUTHORIZATION OF CH2M HILL.
©CH2M HILL

BAR IS ONE INCH ON ORIGINAL DRAWING. 0 1"
IF NOT ONE INCH ON THIS SHEET, ADJUST SCALES ACCORDINGLY.

CITY OF WENATCHEE, WASHINGTON
WASTEWATER TREATMENT PLANT IMPROVEMENTS

MECHANICAL
STANDARD DETAILS

DWG NO. 250-D-20
DATE NOV. 1990
PROJ NO. SEA24579.N1

DATE: 11-4-90 DLC
DRAWN BY: G. SLAYTER DESIGNED BY: G. CONLEY
DGN NAME: 0:/PROJ2/WENATCHE/WE2500-R.DGN

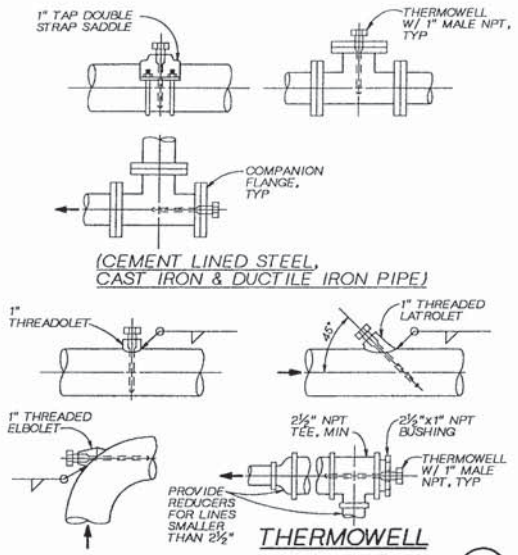

THERMOWELL INST. DETAILS (400)

NTS

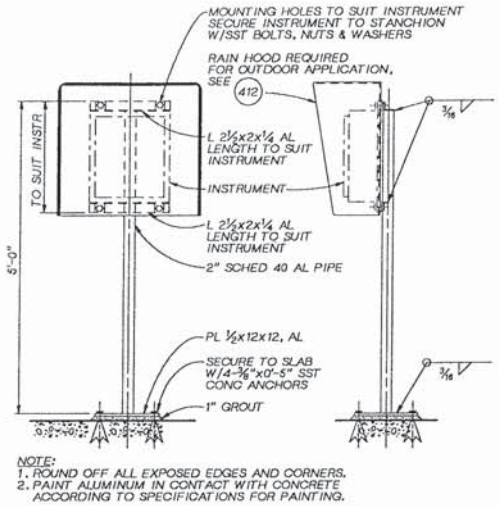

NOTE:
1. ROUND OFF ALL EXPOSED EDGES AND CORNERS.
2. PAINT ALUMINUM IN CONTACT WITH CONCRETE ACCORDING TO SPECIFICATIONS FOR PAINTING.

STANCHION SUPPORT FOR CASE MOUNTED INSTRUMENTS (401)

NTS

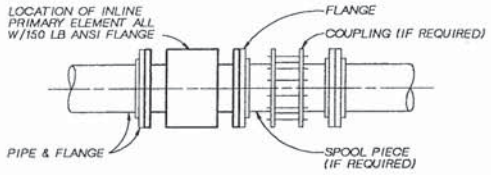

INLINE PRIMARY ELEMENT INSTALLATION (402)

NTS

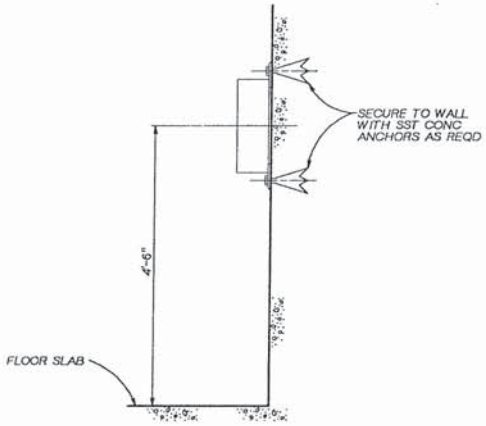

WALL MOUNTED INSTRUMENT INSTALLATION (403)

NTS

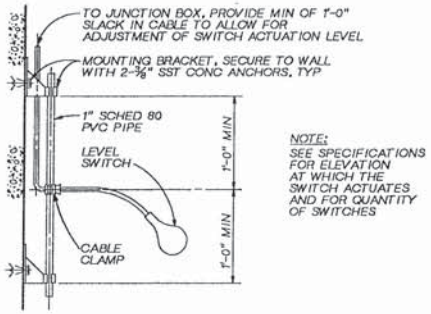

NOTE:
SEE SPECIFICATIONS FOR ELEVATION AT WHICH THE SWITCH ACTUATES AND FOR QUANTITY OF SWITCHES

TYPICAL FLOAT TYPE LEVEL SWITCH INSTALLATION (404)

NTS

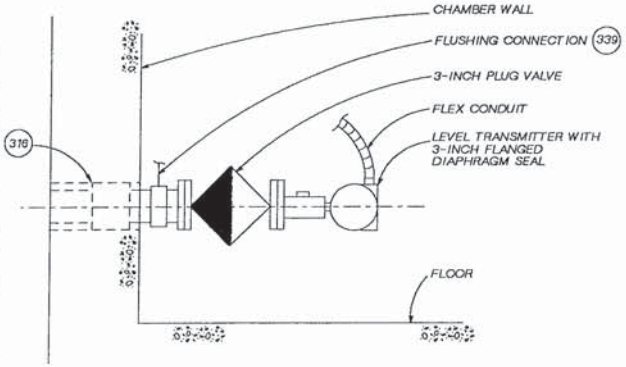

LEVEL TRANSMITTER INSTALLATION (405)

NTS

CH2M HILL	DSGN G. CONLEY				
	DR G. SLAYTER				
	CHK R BAKER				
	APVD K HOOD	NO.	DATE	REVISION	BY	APVD

REUSE OF DOCUMENTS
THIS DOCUMENT, AND THE IDEAS AND DESIGNS INCORPORATED HEREIN, AS AN INSTRUMENT OF PROFESSIONAL SERVICE, IS THE PROPERTY OF CH2M HILL AND IS NOT TO BE USED, IN WHOLE OR IN PART, FOR ANY OTHER PROJECT WITHOUT THE WRITTEN AUTHORIZATION OF CH2M HILL.
©CH2M HILL

BAR IS ONE INCH ON ORIGINAL DRAWING. 0 1"
IF NOT ONE INCH ON THIS SHEET, ADJUST SCALES ACCORDINGLY.

CITY OF WENATCHEE, WASHINGTON
WASTEWATER TREATMENT PLANT IMPROVEMENTS

INSTRUMENTATION AND CONTROL
STANDARD DETAILS

DWG NO. 250-D-21
DATE NOV. 1990
PROJ. NO. SEA24579.N1

DATE: 11-4-90 DLC
DRAWN BY: G. SLAYTER DESIGNED BY: G. CONLEY
DGN NAME: O:/PROJ2/WENATCHE/WE2500-S.DGN

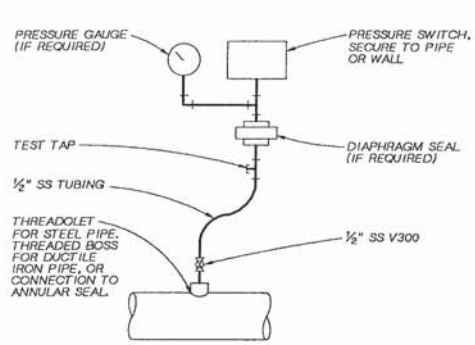

PRESSURE SWITCH INSTALLATION (406)
NTS

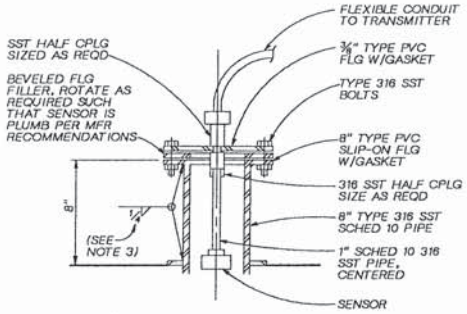

NOTES:
1. TANK MOUNT SHOWN, GRATING MOUNT SIMILAR.
2. FOR GRATING MOUNT, LOCATE SENSOR 6" ABOVE GRATING.
3. WELD BASE OF 8" 316 SST PIPE FOR GRATING MOUNT ONLY.

ULTRASONIC LEVEL ELEMENT, FLANGE MOUNT (407)
NTS

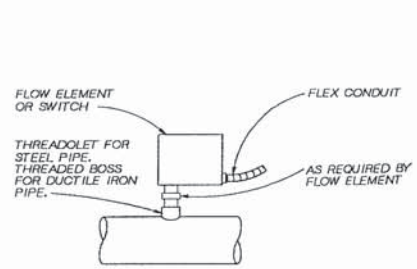

THERMAL FLOW ELEMENT OR SWITCH INSTALLATION (408)
NTS

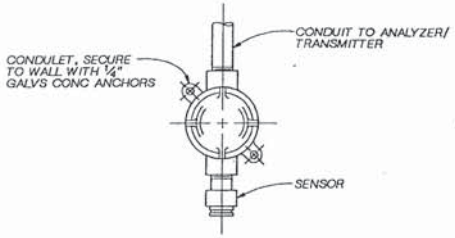

COMBUSTIBLE GAS ELEMENT INSTALLATION (409)
NTS

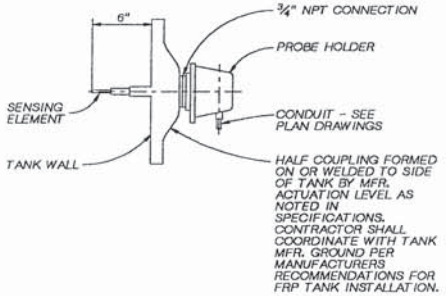

FRP TANK

RIGID PROBE TYPE ELEMENT INSTALLATION (410)
NTS

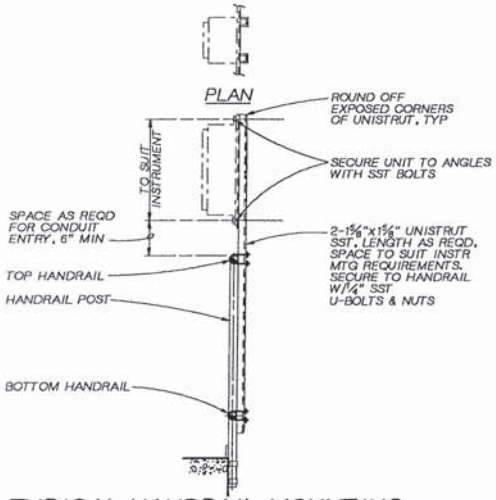

TYPICAL HANDRAIL MOUNTING FOR CASE MOUNTED INSTRUMENTS, DETAIL (411)
NTS

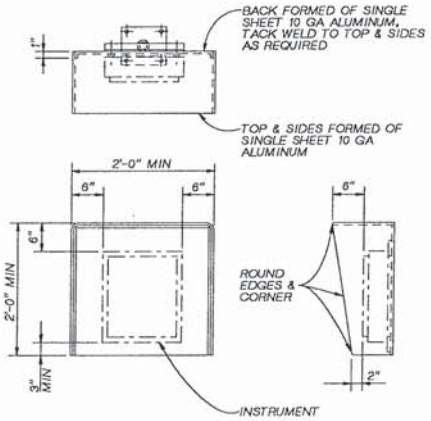

NOTES:
1. ALL EXPOSED EDGES TO BE GROUND SMOOTH AND BURR FREE.
2. MOUNT RAIN HOOD BETWEEN INSTRUMENT AND SUPPORT. DRILL HOLES IN RAIN HOOD AS PER MOUNTING HOLES FOR INSTRUMENT.

RAIN HOOD INSTALLATION (412)
NTS

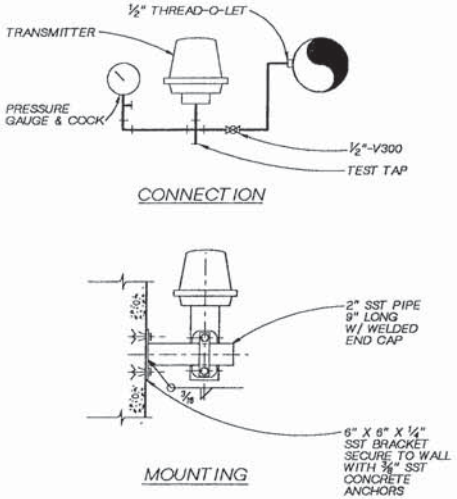

PRESSURE TRANSMITTER INSTALLATION (413)
NTS

KAREN A. HOOD — PROFESSIONAL ENGINEER

CH2M HILL

DSGN	G. CONLEY				
DR	G. SLAYTER				
CHK	R BAKER				
APVD	K HOOD	NO.	DATE	REVISION	BY	APVD

REUSE OF DOCUMENTS
THIS DOCUMENT, AND THE IDEAS AND DESIGNS INCORPORATED HEREIN, AS AN INSTRUMENT OF PROFESSIONAL SERVICE, IS THE PROPERTY OF CH2M HILL AND IS NOT TO BE USED, IN WHOLE OR IN PART, FOR ANY OTHER PROJECT WITHOUT THE WRITTEN AUTHORIZATION OF CH2M HILL.
©CH2M HILL

BAR IS ONE INCH ON ORIGINAL DRAWING. 0 1"
IF NOT ONE INCH ON THIS SHEET, ADJUST SCALES ACCORDINGLY.

CITY OF WENATCHEE, WASHINGTON
WASTEWATER TREATMENT PLANT IMPROVEMENTS

INSTRUMENTATION AND CONTROL
STANDARD DETAILS

DWG NO. 250-D-22
DATE NOV. 1990
PROJ NO. SEA24579.N1

DATE: 11-4-90 DLC
DRAWN BY: G. SLAYTER DESIGNED BY: G. CONLEY
DGN NAME: O:/PROJ2/WENATCHE/WE300N-A.DGN

INSTRUMENT IDENTIFICATION

EXAMPLE SYMBOLS

EQUIPMENT TAGGED HS-3531 THROUGH HS-3533 WOULD BE SHOWN AS FOLLOWS ON THE P & ID DRAWINGS

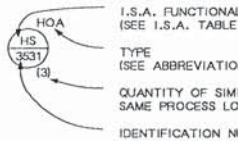

I.S.A. FUNCTIONAL IDENTIFICATION (SEE I.S.A. TABLE BELOW)

TYPE (SEE ABBREVIATIONS AND LETTER SYMBOLS)

QUANTITY OF SIMILAR ITEMS IN THE SAME PROCESS LOOP

IDENTIFICATION NUMBER
- FIRST TWO DIGITS - PLANT / PROCESS AREA NUMBER
- THIRD DIGIT - PROCESS LOOP (FUNCTION) NUMBER
- FOURTH DIGIT - CONSECUTIVE NUMBER FOR SIMILAR ITEMS IN THE SAME LOOP

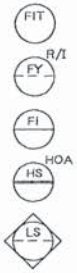

FIELD MOUNTED INSTRUMENT (FLOW INDICATING TRANSMITTER)

REAR-OF-PANEL MOUNTED INSTRUMENT (RESISTANCE TO CURRENT TRANSDUCER)

PANEL MOUNTED INSTRUMENT (FLOW INDICATOR)

MOTOR CONTROL CENTER MOUNTED INSTRUMENT (HAND-OFF-AUTO SWITCH)

PROGRAMMABLE CONTROL SYSTEM FUNCTION

INSTRUMENT SOCIETY OF AMERICA TABLE

	FIRST LETTER(S)		SUCCEEDING LETTERS		
LETTER	PROCESS OR INITIATING VARIABLE	MODIFIER	READOUT OR PASSIVE FUNCTION	OUTPUT FUNCTION	MODIFIER
A	ANALYSIS (t)		ALARM		
B	BURNER FLAME		USER'S CHOICE (t)	USER'S CHOICE (t)	USER'S CHOICE (t)
C	CONDUCTIVITY			CONTROL	
D	DENSITY (S.G.)	DIFFERENTIAL			
E	VOLTAGE		PRIMARY ELEMENT		
F	FLOW RATE	RATIO			
G	GAUGE		GLASS	GATE	
H	HAND (MANUAL)				HIGH
I	CURRENT		INDICATE		
J	POWER	SCAN			
K	TIME OR SCHEDULE			CONTROL STATION	
L	LEVEL		LIGHT (PILOT)		LOW
M	MOTION				MIDDOLE
N	USER'S CHOICE (t)		USER'S CHOICE (t)	USER'S CHOICE (t)	USER'S CHOICE (t)
O	USER'S CHOICE (t)		ORIFICE		
P	PRESSURE (OR VACUUM)		POINT (TEST CONNECTION)		
Q	QUANTITY OF EVENT (t)	INTEGRATE	INTEGRATE		
R			RECORD OR PRINT		
S	SPEED OR FREQUENCY	SAFETY		SWITCH	
T	TEMPERATURE			TRANSMIT	
U	MULTIVARIABLE (t)		MULTIFUNCTION (t)		
V	VISCOSITY			VALVE	
W	WEIGHT OR FORCE		WELL		
X	UNCLASSIFIED (t)		UNCLASSIFIED (t)	UNCLASSIFIED (t)	UNCLASSIFIED (t)
Y	USER'S CHOICE (t)			RELAY OR COMPUTE (t)	
Z	POSITION			DRIVE, ACTUATE OR UNCLASSIFIED FINAL CONTROL ELEMENT	

(t) WHEN USED, EXPLANATION IS SHOWN ADJACENT TO INSTRUMENT SYMBOL. SEE ABBREVIATIONS AND LETTER SYMBOLS.

PUMP AND COMPRESSOR SYMBOLS

NOTE: XX: AS ADJUSTABLE SPEED
AZ ADJUSTABLE STROKE
CS CONSTANT SPEED (SINGLE SPEED)

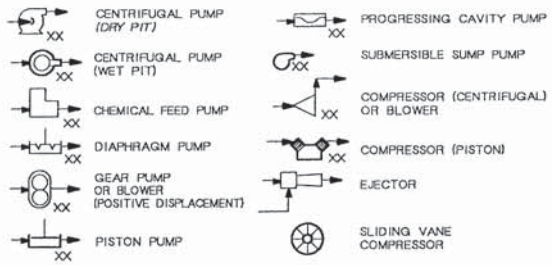

CENTRIFUGAL PUMP (DRY PIT)

CENTRIFUGAL PUMP (WET PIT)

CHEMICAL FEED PUMP

DIAPHRAGM PUMP

GEAR PUMP OR BLOWER (POSITIVE DISPLACEMENT)

PISTON PUMP

PROGRESSING CAVITY PUMP

SUBMERSIBLE SUMP PUMP

COMPRESSOR (CENTRIFUGAL) OR BLOWER

COMPRESSOR (PISTON)

EJECTOR

SLIDING VANE COMPRESSOR

PRIMARY ELEMENT SYMBOLS

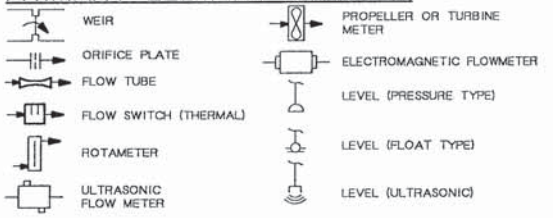

WEIR

ORIFICE PLATE

FLOW TUBE

FLOW SWITCH (THERMAL)

ROTAMETER

ULTRASONIC FLOW METER

PROPELLER OR TURBINE METER

ELECTROMAGNETIC FLOWMETER

LEVEL (PRESSURE TYPE)

LEVEL (FLOAT TYPE)

LEVEL (ULTRASONIC)

ACTUATOR SYMBOLS

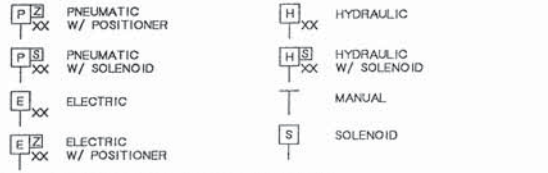

PNEUMATIC W/ POSITIONER

PNEUMATIC W/ SOLENOID

ELECTRIC

ELECTRIC W/ POSITIONER

HYDRAULIC

HYDRAULIC W/ SOLENOID

MANUAL

SOLENOID

NOTE: ON LOSS OF PRIMARY POWER (PNEUMATIC OR ELECTRICAL)
XX: FO = FAIL OPEN
FC = FAIL CLOSED
FLP = FAIL TO LAST POSITION

ABBREVIATIONS AND LETTER SYMBOLS

AM	AUTO-MANUAL	MCC-X	MOTOR CONTROL CENTER NO.X
BFP	BELT FILTER PRESS	OC	OPEN-CLOSE
CP-X	CONTROL PANEL NO. X	OCA	OPEN-CLOSE-AUTO
CS	CONSTANT SPEED	OF	OVERFLOW
D	DRAIN	OO	ON-OFF
ES	EMERGENCY STOP	OR	OFF-REMOTE
FOR	FORWARD-OFF-REVERSE	PLC	PROGRAMMABLE LOGIC CONTROLLER
GBT	GRAVITY BELT THICKENER	R	RESISTANCE
HOA	HAND-OFF-AUTO	SS	START-STOP
HOR	HAND-OFF-REMOTE	TF	TIME-FLOW
I	CURRENT	TL	TIME-LEVEL
LEL	LOWER EXPLOSIVE LIMIT	TMF	TIME-MANUAL-FLOW
LOS	LOCKOUT STOP	VS	VARIABLE SPEED
LP-X	LOCAL PANEL NO. X	VSD	VARIABLE SPEED DRIVE
LR	LOCAL-REMOTE	Σ	SUM
M	MANUAL	X	MULTIPLY

LINE LEGEND

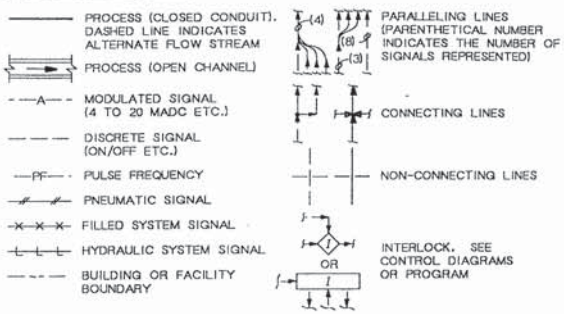

PROCESS (CLOSED CONDUIT). DASHED LINE INDICATES ALTERNATE FLOW STREAM

PROCESS (OPEN CHANNEL)

MODULATED SIGNAL (4 TO 20 MADC ETC.)

DISCRETE SIGNAL (ON/OFF ETC.)

PULSE FREQUENCY

PNEUMATIC SIGNAL

FILLED SYSTEM SIGNAL

HYDRAULIC SYSTEM SIGNAL

BUILDING OR FACILITY BOUNDARY

PARALLELING LINES (PARENTHETICAL NUMBER INDICATES THE NUMBER OF SIGNALS REPRESENTED)

CONNECTING LINES

NON-CONNECTING LINES

INTERLOCK. SEE CONTROL DIAGRAMS OR PROGRAM

MISCELLANEOUS SYMBOLS

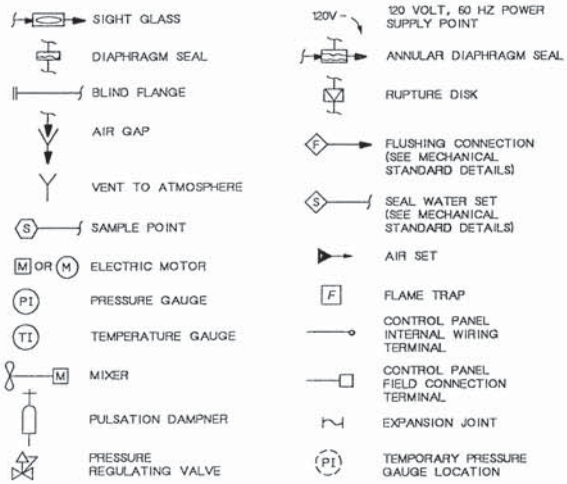

SIGHT GLASS

DIAPHRAGM SEAL

BLIND FLANGE

AIR GAP

VENT TO ATMOSPHERE

SAMPLE POINT

ELECTRIC MOTOR

PRESSURE GAUGE

TEMPERATURE GAUGE

MIXER

PULSATION DAMPNER

PRESSURE REGULATING VALVE

120 VOLT, 60 HZ POWER SUPPLY POINT

ANNULAR DIAPHRAGM SEAL

RUPTURE DISK

FLUSHING CONNECTION (SEE MECHANICAL STANDARD DETAILS)

SEAL WATER SET (SEE MECHANICAL STANDARD DETAILS)

AIR SET

FLAME TRAP

CONTROL PANEL INTERNAL WIRING TERMINAL

CONTROL PANEL FIELD CONNECTION TERMINAL

EXPANSION JOINT

TEMPORARY PRESSURE GAUGE LOCATION

EQUIPMENT TYPES

B -	BLOWER	HX -	HEAT EXCHANGER
BO -	BOILER	M -	MOTORIZED DEVICE
BU -	BURNER	P -	PUMP
EF -	EXHAUST FAN	S -	SEDIMENT TRAP
G -	GATE OR WEIR	SF -	SUPPLY FAN
GC -	GAS COMPRESSOR	T -	TANK

GENERAL NOTES

1. ALL PANEL MOUNTED INSTRUMENTS SHOWN ON P & ID DRAWINGS ARE PART OF CONTROL PANEL NOTED EITHER AT THE BOTTOM OF THE DRAWING OR AT THE LOWER RIGHT SIDE OF THE INSTRUMENT SYMBOL.

2. THIS IS A STANDARD LEGEND. THEREFORE NOT ALL OF THIS INFORMATION MAY BE USED ON THIS PROJECT.

KAREN A. HOOD — REGISTERED PROFESSIONAL ENGINEER — STATE OF WASHINGTON

CH2M HILL

DSGN G. CONLEY
DR G. SLAYTER
CHK R BAKER
APVD K HOOD

NO.	DATE	REVISION	BY	APVD

REUSE OF DOCUMENTS
THIS DOCUMENT, AND THE IDEAS AND DESIGNS INCORPORATED HEREIN, AS AN INSTRUMENT OF PROFESSIONAL SERVICE, IS THE PROPERTY OF CH2M HILL AND IS NOT TO BE USED, IN WHOLE OR IN PART, FOR ANY OTHER PROJECT WITHOUT THE WRITTEN AUTHORIZATION OF CH2M HILL.
©CH2M HILL

BAR IS ONE INCH ON ORIGINAL DRAWING. 0 — 1"
IF NOT ONE INCH ON THIS SHEET, ADJUST SCALES ACCORDINGLY.

CITY OF WENATCHEE, WASHINGTON
WASTEWATER TREATMENT PLANT IMPROVEMENTS

INSTRUMENTATION AND CONTROL
LEGEND AND NOTES

DWG NO. 300-N-01
DATE NOV. 1990
PROJ NO. SEA24579.N1

DATE: 10-24-90 GS
DRAWN BY: G. SLAYTER DESIGNED BY: G. CONLEY
DGN NAME: O:/PROJ2/WENATCHE/WE300N-B.DGN

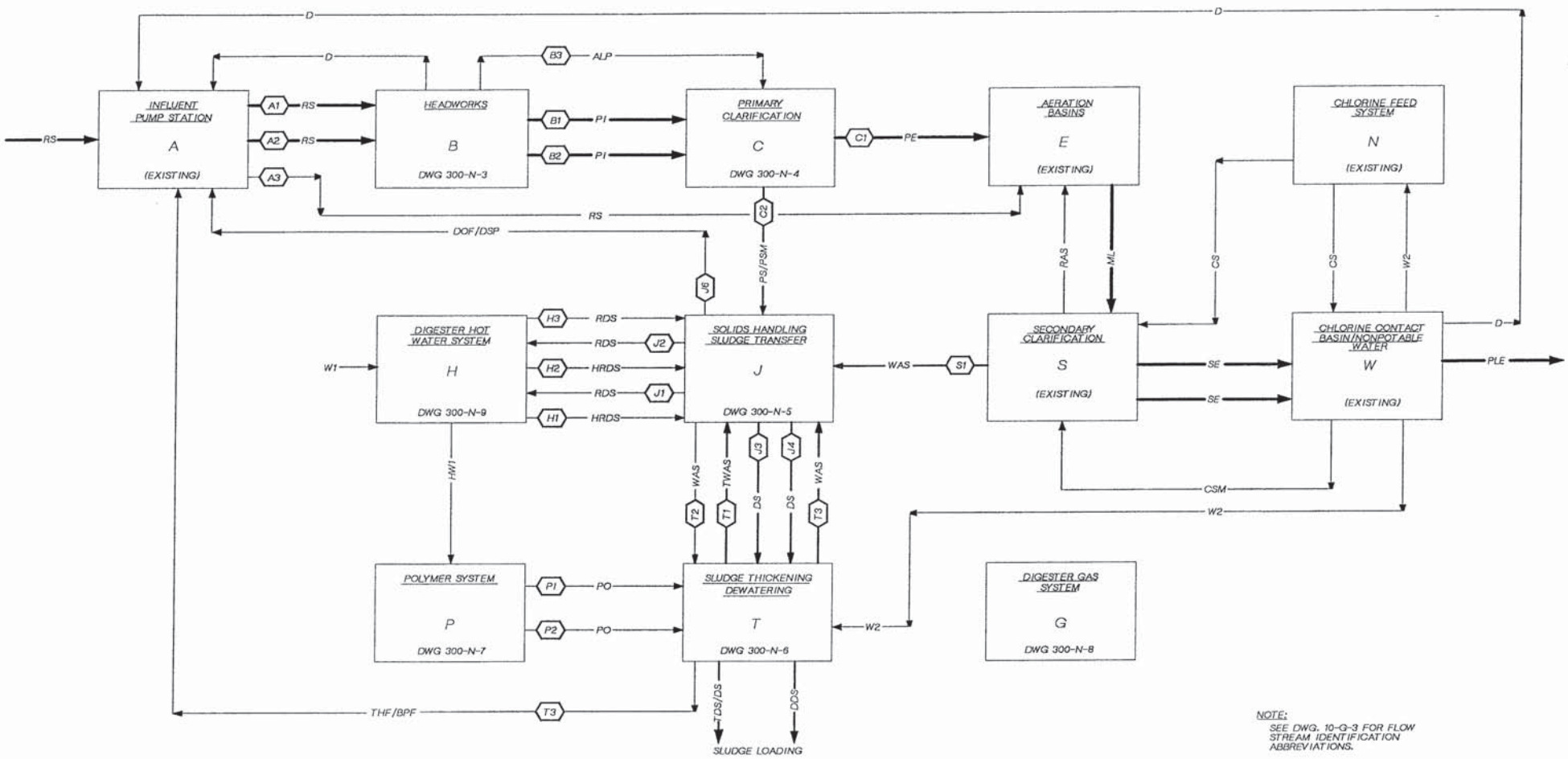

NOTE:
SEE DWG. 10-G-3 FOR FLOW STREAM IDENTIFICATION ABBREVIATIONS.

DSGN G. CONLEY					
DR G. SLAYTER					
CHK R BAKER					
APVD K HOOD	NO.	DATE	REVISION	BY	APVD

REUSE OF DOCUMENTS
THIS DOCUMENT, AND THE IDEAS AND DESIGNS INCORPORATED HEREIN, AS AN INSTRUMENT OF PROFESSIONAL SERVICE, IS THE PROPERTY OF CH2M HILL AND IS NOT TO BE USED, IN WHOLE OR IN PART, FOR ANY OTHER PROJECT WITHOUT THE WRITTEN AUTHORIZATION OF CH2M HILL.
©CH2M HILL

BAR IS ONE INCH ON ORIGINAL DRAWING.
0 1"
IF NOT ONE INCH ON THIS SHEET, ADJUST SCALES ACCORDINGLY.

CITY OF WENATCHEE, WASHINGTON
WASTEWATER TREATMENT PLANT IMPROVEMENTS

INSTRUMENTATION AND CONTROL
PROCESS INTERFACE SUMMARY

DWG NO. 300-N-02
DATE NOV. 1990
PROJ. NO. SEA24579.N1

DATE: 11-4-90 DLC
DRAWN BY: G. SLAYTER DESIGNED BY: G. CONLEY
DGN NAME: 0:/PROJ2/WENATCHE/WE300N-C.DGN

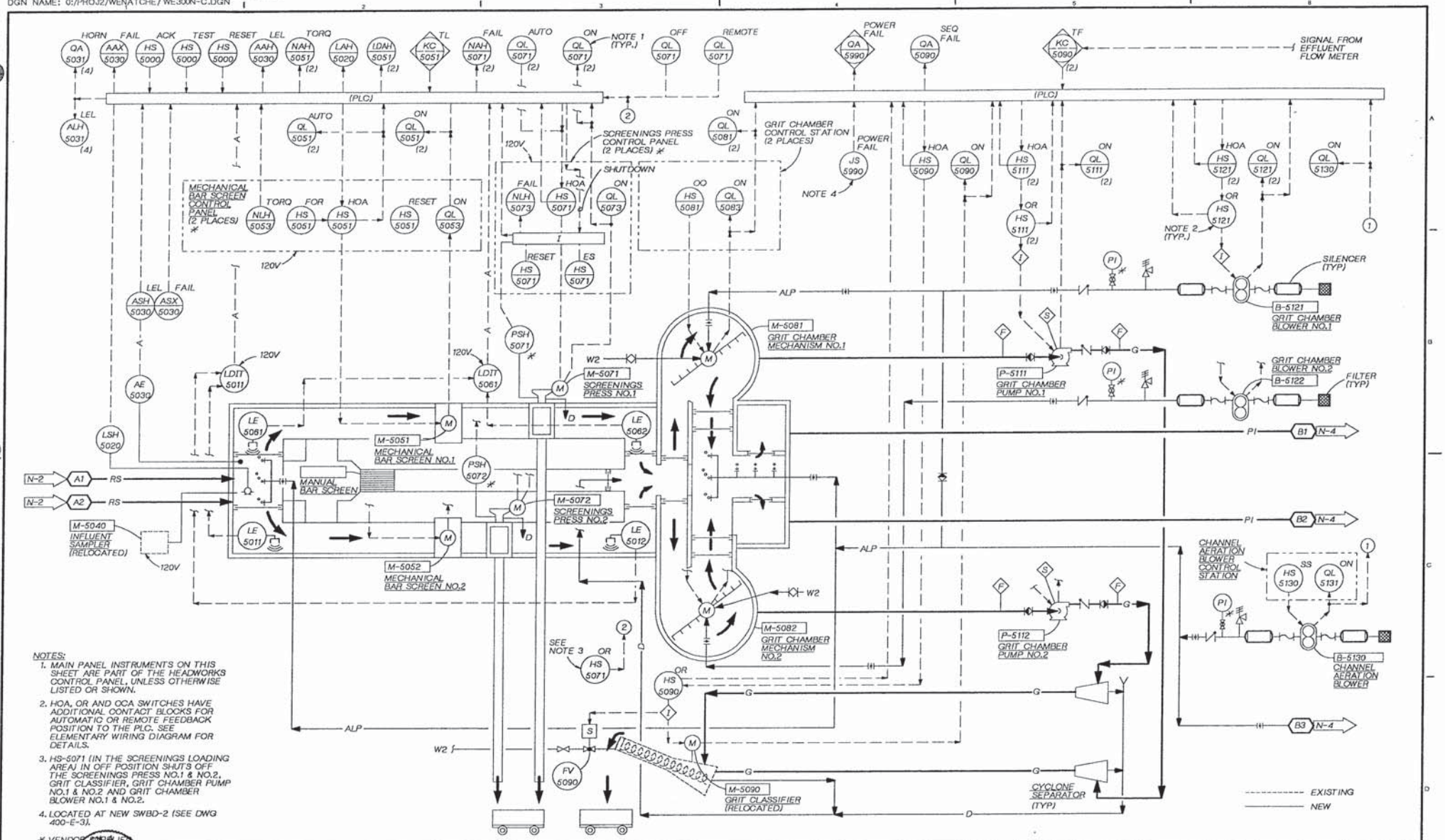

NOTES:

1. MAIN PANEL INSTRUMENTS ON THIS SHEET ARE PART OF THE HEADWORKS CONTROL PANEL, UNLESS OTHERWISE LISTED OR SHOWN.
2. HOA, OR AND OCA SWITCHES HAVE ADDITIONAL CONTACT BLOCKS FOR AUTOMATIC OR REMOTE FEEDBACK POSITION TO THE PLC. SEE ELEMENTARY WIRING DIAGRAM FOR DETAILS.
3. HS-5071 (IN THE SCREENINGS LOADING AREA) IN OFF POSITION SHUTS OFF THE SCREENINGS PRESS NO.1 & NO.2, GRIT CLASSIFIER, GRIT CHAMBER PUMP NO.1 & NO.2 AND GRIT CHAMBER BLOWER NO.1 & NO.2.
4. LOCATED AT NEW SWBD-2 (SEE DWG 400-E-3).

* VENDOR SUPPLIED

DSGN G. CONLEY					
DR G. SLAYTER					
CHK R BAKER					
APVD K HOOD	NO.	DATE	REVISION	BY	APVD

REUSE OF DOCUMENTS
THIS DOCUMENT, AND THE IDEAS AND DESIGNS INCORPORATED HEREIN, AS AN INSTRUMENT OF PROFESSIONAL SERVICE, IS THE PROPERTY OF CH2M HILL AND IS NOT TO BE USED, IN WHOLE OR IN PART, FOR ANY OTHER PROJECT WITHOUT THE WRITTEN AUTHORIZATION OF CH2M HILL.
©CH2M HILL

BAR IS ONE INCH ON ORIGINAL DRAWING. 0 1"
IF NOT ONE INCH ON THIS SHEET, ADJUST SCALES ACCORDINGLY.

CITY OF WENATCHEE, WASHINGTON
WASTEWATER TREATMENT PLANT IMPROVEMENTS

INSTRUMENTATION AND CONTROL
HEADWORKS
P & ID

DWG NO. 300-N-03
DATE NOV. 1990
PROJ NO. SEA24579.N1

DATE: 11-4-90 DLC
DRAWN BY: G. SLAYTER DESIGNED BY: G. CONLEY
DGN NAME: 0:/PROJ2/WENATCHE/WE300N-D.DGN

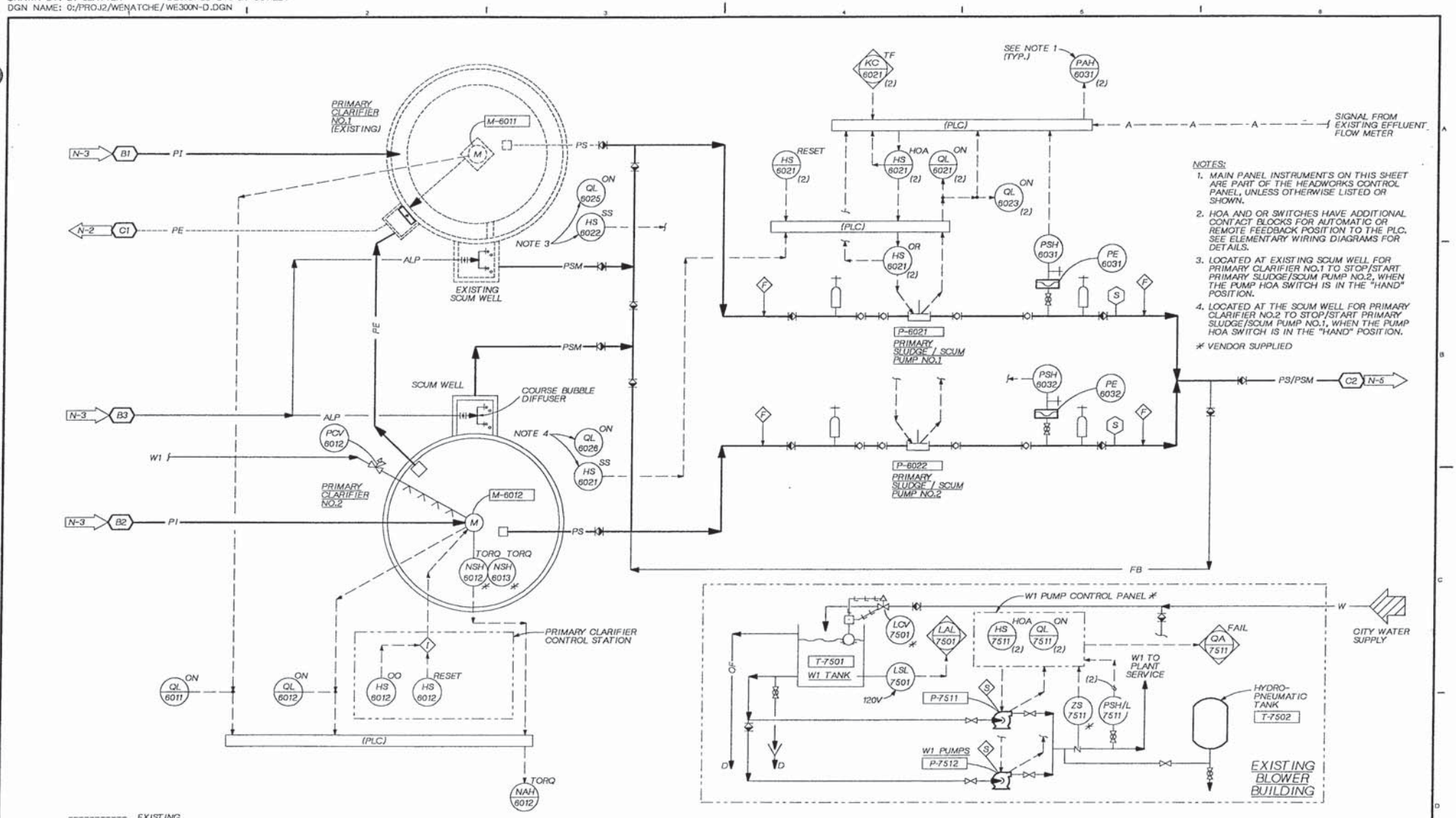

NOTES:

1. MAIN PANEL INSTRUMENTS ON THIS SHEET ARE PART OF THE HEADWORKS CONTROL PANEL, UNLESS OTHERWISE LISTED OR SHOWN.
2. HOA AND OR SWITCHES HAVE ADDITIONAL CONTACT BLOCKS FOR AUTOMATIC OR REMOTE FEEDBACK POSITION TO THE PLC. SEE ELEMENTARY WIRING DIAGRAMS FOR DETAILS.
3. LOCATED AT EXISTING SCUM WELL FOR PRIMARY CLARIFIER NO.1 TO STOP/START PRIMARY SLUDGE/SCUM PUMP NO.2, WHEN THE PUMP HOA SWITCH IS IN THE "HAND" POSITION.
4. LOCATED AT THE SCUM WELL FOR PRIMARY CLARIFIER NO.2 TO STOP/START PRIMARY SLUDGE/SCUM PUMP NO.1, WHEN THE PUMP HOA SWITCH IS IN THE "HAND" POSITION.

* VENDOR SUPPLIED

KAREN A. HOOD — STATE OF WASHINGTON — REGISTERED PROFESSIONAL ENGINEER

CH2M HILL

DSGN	G. CONLEY
DR	G. SLAYTER
CHK	R BAKER
APVD	K HOOD

NO.	DATE	REVISION	BY	APVD

REUSE OF DOCUMENTS

THIS DOCUMENT, AND THE IDEAS AND DESIGNS INCORPORATED HEREIN, AS AN INSTRUMENT OF PROFESSIONAL SERVICE, IS THE PROPERTY OF CH2M HILL AND IS NOT TO BE USED, IN WHOLE OR IN PART, FOR ANY OTHER PROJECT WITHOUT THE WRITTEN AUTHORIZATION OF CH2M HILL.
©CH2M HILL

BAR IS ONE INCH ON ORIGINAL DRAWING. 0 1"
IF NOT ONE INCH ON THIS SHEET, ADJUST SCALES ACCORDINGLY.

CITY OF WENATCHEE, WASHINGTON
WASTEWATER TREATMENT PLANT IMPROVEMENTS

INSTRUMENTATION AND CONTROL
PRIMARY CLARIFICATION
P & ID

DWG NO. 300-N-04
DATE NOV. 1990
PROJ NO. SEA24579.N1

DATE: 11-6-90 DLC
DRAWN BY: G. SLAYTER DESIGNED BY: G. CONLEY
DGN NAME: O:/PROJ2/WENATCHE/WE300N-E.DGN

NOTES:
1. PANEL MOUNTED DEVICES ON THIS DRAWING ARE LOCATED ON SLUDGE CONTROL PANEL (SCP) UNLESS OTHERWISE NOTED.
2. HOA AND OCA SWITCHES HAVE ADDITIONAL CONTACT BLOCKS FOR THE AUTOMATIC FEEDBACK POSITION TO THE PLC. SEE ELEMENTARY WIRING DIAGRAMS FOR DETAILS.

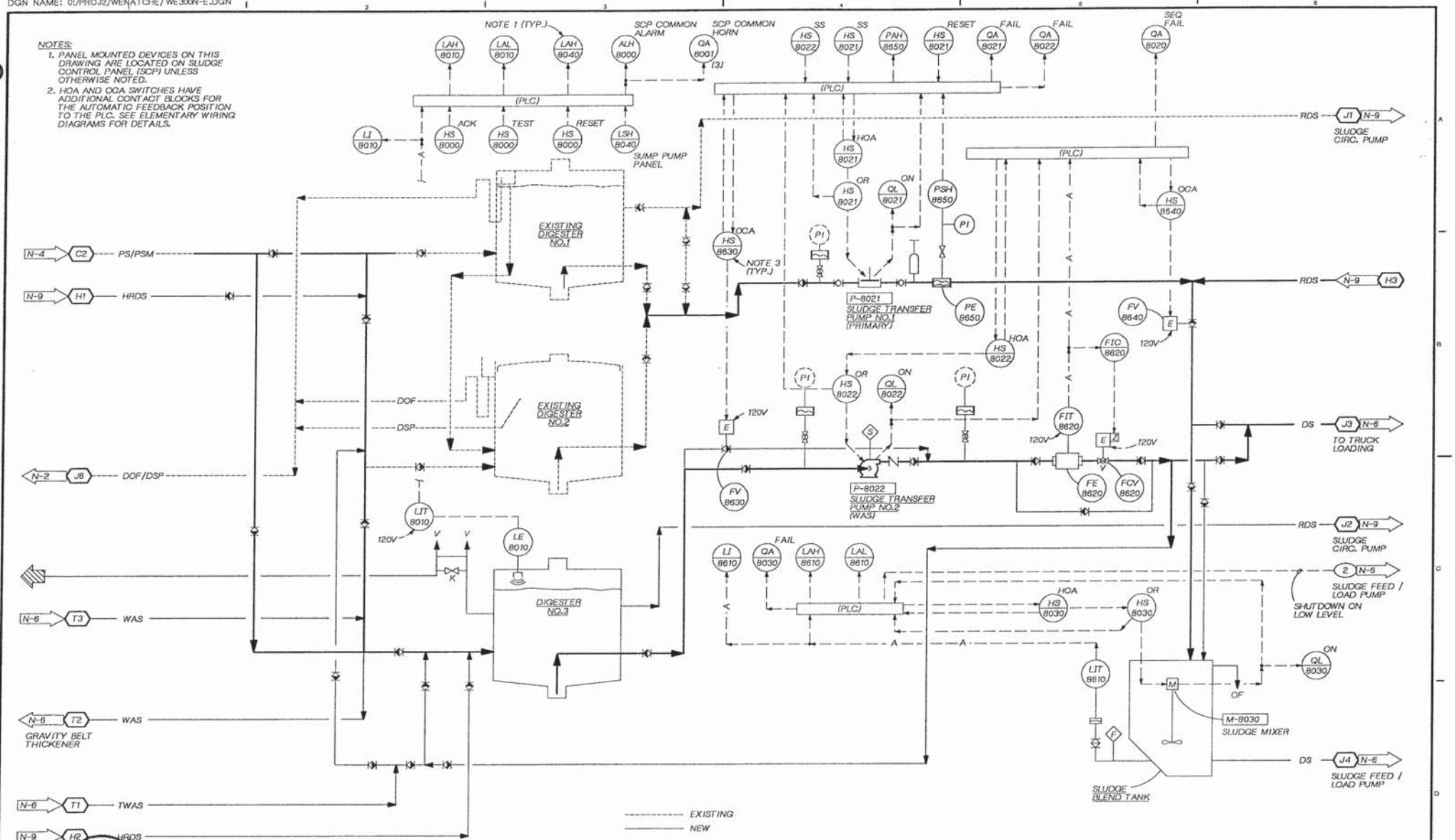

DSGN G. CONLEY					
DR G. SLAYTER					
CHK R BAKER					
APVD K HOOD	NO.	DATE	REVISION	BY	APVD

CH2M HILL

REUSE OF DOCUMENTS
THIS DOCUMENT, AND THE IDEAS AND DESIGNS INCORPORATED HEREIN, AS AN INSTRUMENT OF PROFESSIONAL SERVICE, IS THE PROPERTY OF CH2M HILL AND IS NOT TO BE USED, IN WHOLE OR IN PART, FOR ANY OTHER PROJECT WITHOUT THE WRITTEN AUTHORIZATION OF CH2M HILL.
©CH2M HILL

BAR IS ONE INCH ON ORIGINAL DRAWING. 0 1"
IF NOT ONE INCH ON THIS SHEET, ADJUST SCALES ACCORDINGLY.

CITY OF WENATCHEE, WASHINGTON
WASTEWATER TREATMENT PLANT IMPROVEMENTS

INSTRUMENTATION AND CONTROL
SOLIDS HANDLING FACILITY
SLUDGE TRANSFER P & ID

DWG NO. 300-N-05
DATE NOV. 1990
PROJ NO. SEA24579.N1

DATE: 11-6-90 DLC
DRAWN BY: G. SLAYTER DESIGNED BY: G. CONLEY
DGN NAME: O:/PROJ2/WENATCHE/WE300N-F.DGN

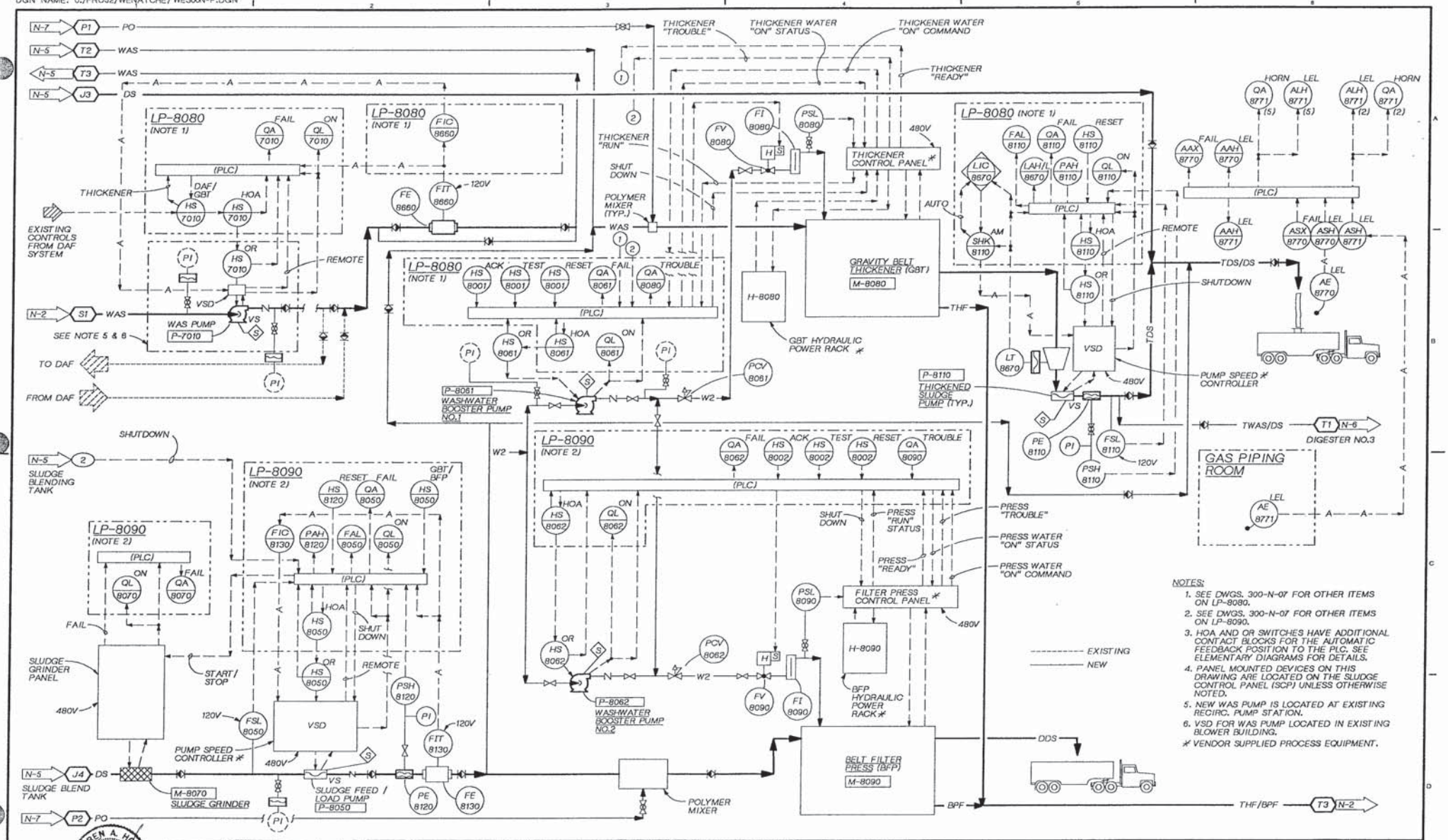

NOTES:

1. SEE DWGS. 300-N-07 FOR OTHER ITEMS ON LP-8080.
2. SEE DWGS. 300-N-07 FOR OTHER ITEMS ON LP-8090.
3. HOA AND OR SWITCHES HAVE ADDITIONAL CONTACT BLOCKS FOR THE AUTOMATIC FEEDBACK POSITION TO THE PLC. SEE ELEMENTARY DIAGRAMS FOR DETAILS.
4. PANEL MOUNTED DEVICES ON THIS DRAWING ARE LOCATED ON THE SLUDGE CONTROL PANEL (SCP) UNLESS OTHERWISE NOTED.
5. NEW WAS PUMP IS LOCATED AT EXISTING RECIRC. PUMP STATION.
6. VSD FOR WAS PUMP LOCATED IN EXISTING BLOWER BUILDING.

* VENDOR SUPPLIED PROCESS EQUIPMENT.

KAREN A. HOOD — REGISTERED PROFESSIONAL ENGINEER

CH2M HILL

DSGN	G. CONLEY
DR	G. SLAYTER
CHK	R. BAKER
APVD	K. HOOD

NO.	DATE	REVISION	BY	APVD

REUSE OF DOCUMENTS
THIS DOCUMENT, AND THE IDEAS AND DESIGNS INCORPORATED HEREIN, AS AN INSTRUMENT OF PROFESSIONAL SERVICE, IS THE PROPERTY OF CH2M HILL AND IS NOT TO BE USED, IN WHOLE OR IN PART, FOR ANY OTHER PROJECT WITHOUT THE WRITTEN AUTHORIZATION OF CH2M HILL.
©CH2M HILL

BAR IS ONE INCH ON ORIGINAL DRAWING.
0 1"
IF NOT ONE INCH ON THIS SHEET, ADJUST SCALES ACCORDINGLY.

CITY OF WENATCHEE, WASHINGTON
WASTEWATER TREATMENT PLANT IMPROVEMENTS

INSTRUMENTATION AND CONTROL
SOLIDS HANDLING FACILITY
THICKENING & DEWATERING P & ID

DWG NO. 300-N-06
DATE NOV. 1990
PROJ. NO. SEA24579.N1

DATE: 11-6-90 DLC
DRAWN BY: MAXEY-SUHR DESIGNED BY: G. CONLEY
DGN NAME: O:/PROJ2/WENATCHE/WE300N-G.DGN

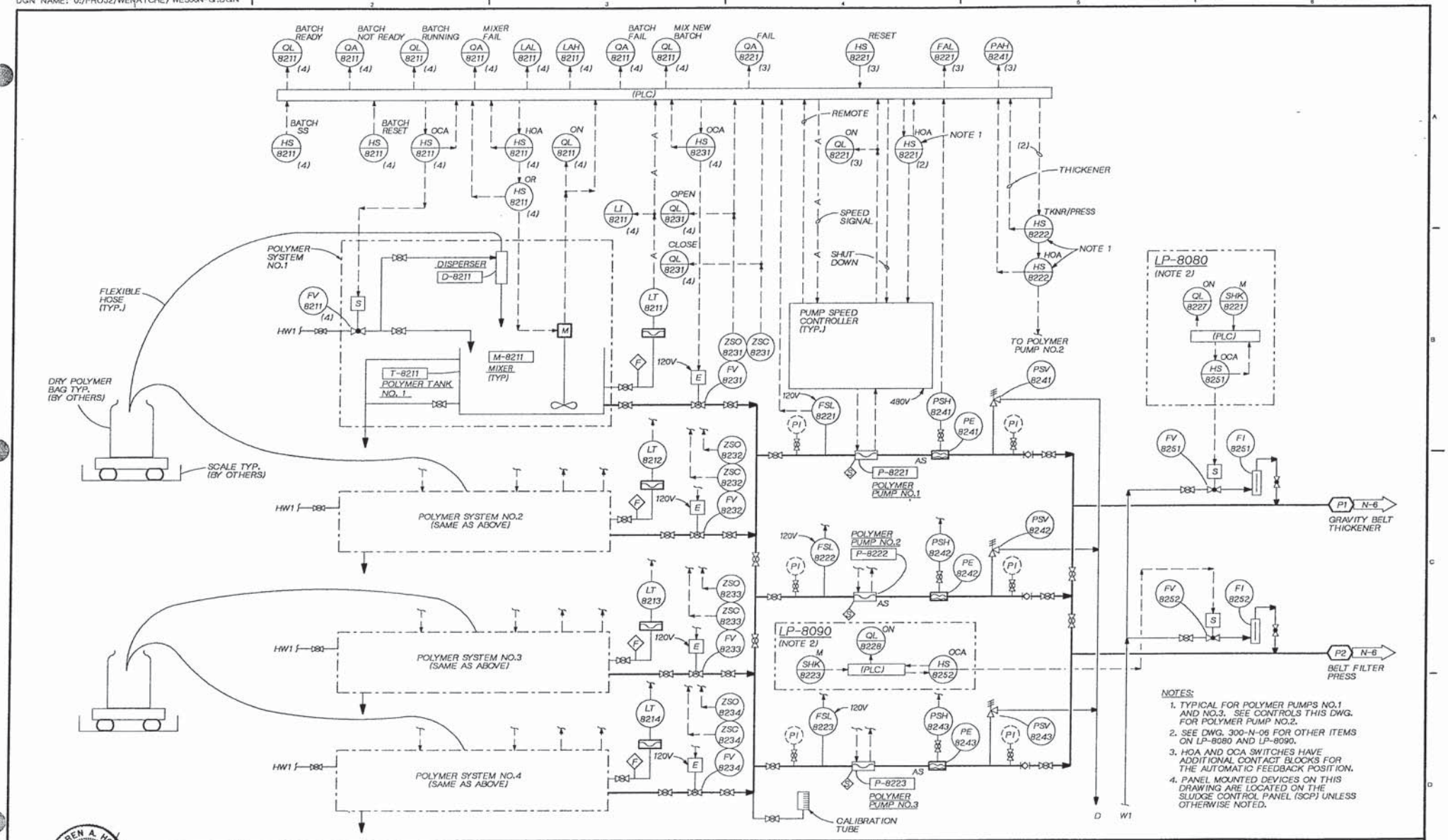

NOTES:

1. TYPICAL FOR POLYMER PUMPS NO.1 AND NO.3. SEE CONTROLS THIS DWG. FOR POLYMER PUMP NO.2.
2. SEE DWG. 300-N-06 FOR OTHER ITEMS ON LP-8080 AND LP-8090.
3. HOA AND OCA SWITCHES HAVE ADDITIONAL CONTACT BLOCKS FOR THE AUTOMATIC FEEDBACK POSITION.
4. PANEL MOUNTED DEVICES ON THIS DRAWING ARE LOCATED ON THE SLUDGE CONTROL PANEL (SCP) UNLESS OTHERWISE NOTED.

KAREN A. HOOD — STATE OF WASHINGTON — REGISTERED PROFESSIONAL ENGINEER

CH2M HILL

DSGN	G. CONLEY
DR	MAXEY-SUHR
CHK	R BAKER
APVD	K HOOD

NO.	DATE	REVISION	BY	APVD

REUSE OF DOCUMENTS
THIS DOCUMENT, AND THE IDEAS AND DESIGNS INCORPORATED HEREIN, AS AN INSTRUMENT OF PROFESSIONAL SERVICE, IS THE PROPERTY OF CH2M HILL AND IS NOT TO BE USED, IN WHOLE OR IN PART, FOR ANY OTHER PROJECT WITHOUT THE WRITTEN AUTHORIZATION OF CH2M HILL.
©CH2M HILL

BAR IS ONE INCH ON ORIGINAL DRAWING. 0 1"
IF NOT ONE INCH ON THIS SHEET, ADJUST SCALES ACCORDINGLY.

CITY OF WENATCHEE, WASHINGTON
WASTEWATER TREATMENT PLANT IMPROVEMENTS

INSTRUMENTATION AND CONTROL
SOLIDS HANDLING FACILITY
POLYMER FEED SYSTEM P & ID

DWG NO. 300-N-07
DATE NOV. 1990
PROJ NO. SEA24579.N1

DATE: 11-6-90 DLC
DRAWN BY: G. SLAYTER DESIGNED BY: G. CONLEY
DGN NAME: O:/PROJ2/WENATCHE/WE300N-H.DGN

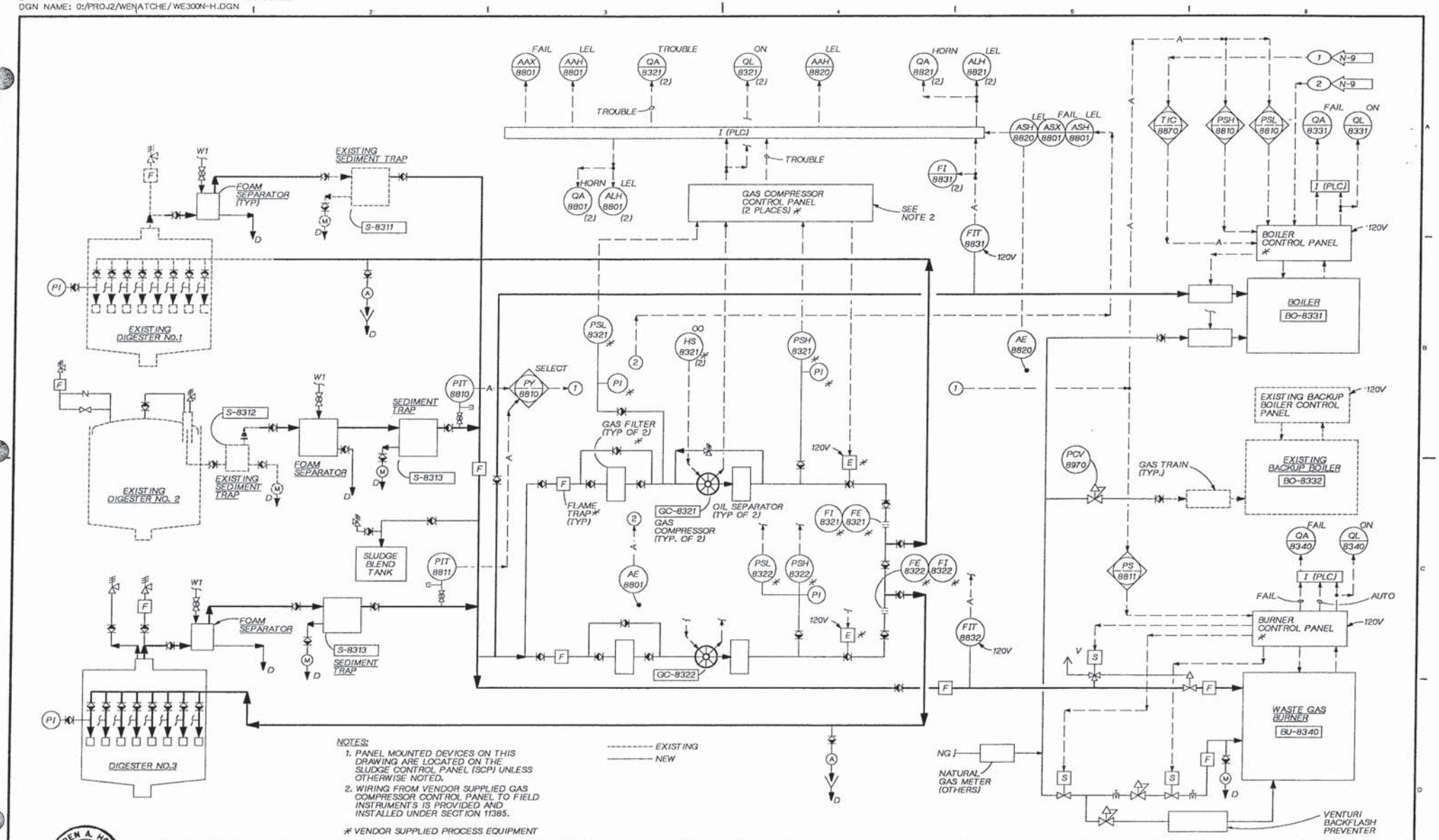

NOTES:

1. PANEL MOUNTED DEVICES ON THIS DRAWING ARE LOCATED ON THE SLUDGE CONTROL PANEL (SCP) UNLESS OTHERWISE NOTED.
2. WIRING FROM VENDOR SUPPLIED GAS COMPRESSOR CONTROL PANEL TO FIELD INSTRUMENTS IS PROVIDED AND INSTALLED UNDER SECTION 11385.

* VENDOR SUPPLIED PROCESS EQUIPMENT

KAREN A. HOOD PROFESSIONAL ENGINEER

CH2M HILL

DSGN	G. CONLEY				
DR	G. SLAYTER				
CHK	R BAKER				
APVD	K HOOD	NO.	DATE	REVISION	BY	APVD

REUSE OF DOCUMENTS

THIS DOCUMENT, AND THE IDEAS AND DESIGNS INCORPORATED HEREIN, AS AN INSTRUMENT OF PROFESSIONAL SERVICE, IS THE PROPERTY OF CH2M HILL AND IS NOT TO BE USED, IN WHOLE OR IN PART, FOR ANY OTHER PROJECT WITHOUT THE WRITTEN AUTHORIZATION OF CH2M HILL.

©CH2M HILL

BAR IS ONE INCH ON ORIGINAL DRAWING. 0 1"
IF NOT ONE INCH ON THIS SHEET, ADJUST SCALES ACCORDINGLY.

CITY OF WENATCHEE, WASHINGTON
WASTEWATER TREATMENT PLANT IMPROVEMENTS

INSTRUMENTATION AND CONTROL
SOLIDS HANDLING FACILITY
DIGESTER GAS SYSTEM P & ID

DWG NO. 300-N-08
DATE NOV. 1990
PROJ. NO. SEA24579.N1

DATE: 11-6-90 DLC
DRAWN BY: G. SLAYTER DESIGNED BY: G. CONLEY
DGN NAME: 0:/PROJ2/WENATCHE/WE300N-1.DGN

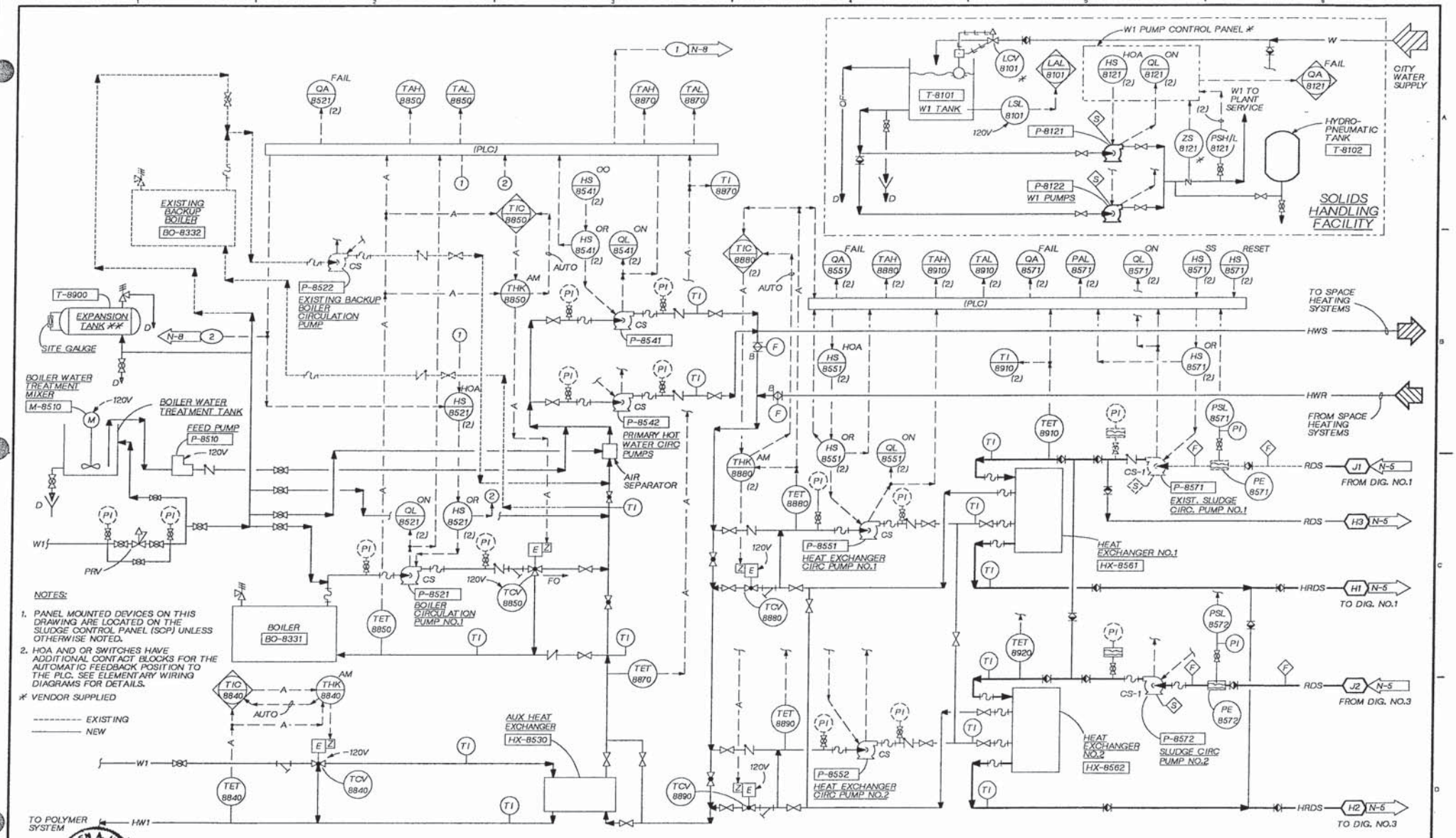

DSGN	G. CONLEY				
DR	G. SLAYTER				
CHK	R. BAKER				
APVD	K. HOOD	NO.	DATE	REVISION	BY / APVD

CH2M HILL

REUSE OF DOCUMENTS
THIS DOCUMENT, AND THE IDEAS AND DESIGNS INCORPORATED HEREIN, AS AN INSTRUMENT OF PROFESSIONAL SERVICE, IS THE PROPERTY OF CH2M HILL AND IS NOT TO BE USED, IN WHOLE OR IN PART, FOR ANY OTHER PROJECT WITHOUT THE WRITTEN AUTHORIZATION OF CH2M HILL.
©CH2M HILL

BAR IS ONE INCH ON ORIGINAL DRAWING. 0 1"
IF NOT ONE INCH ON THIS SHEET, ADJUST SCALES ACCORDINGLY.

CITY OF WENATCHEE, WASHINGTON
WASTEWATER TREATMENT PLANT IMPROVEMENTS

INSTRUMENTATION AND CONTROL
SOLIDS HANDLING FACILITY
DIGESTER HOT WATER SYSTEM P & ID

DWG NO. 300-N-09
DATE NOV. 1990
PROJ. NO. SEA24579.N1

DATE: 11-4-90 DLC
DRAWN BY: G. SLAYTER DESIGNED BY: G. CONLEY
DGN NAME: O:/PROJ2/WENATCHE/WE300N-J.DGN

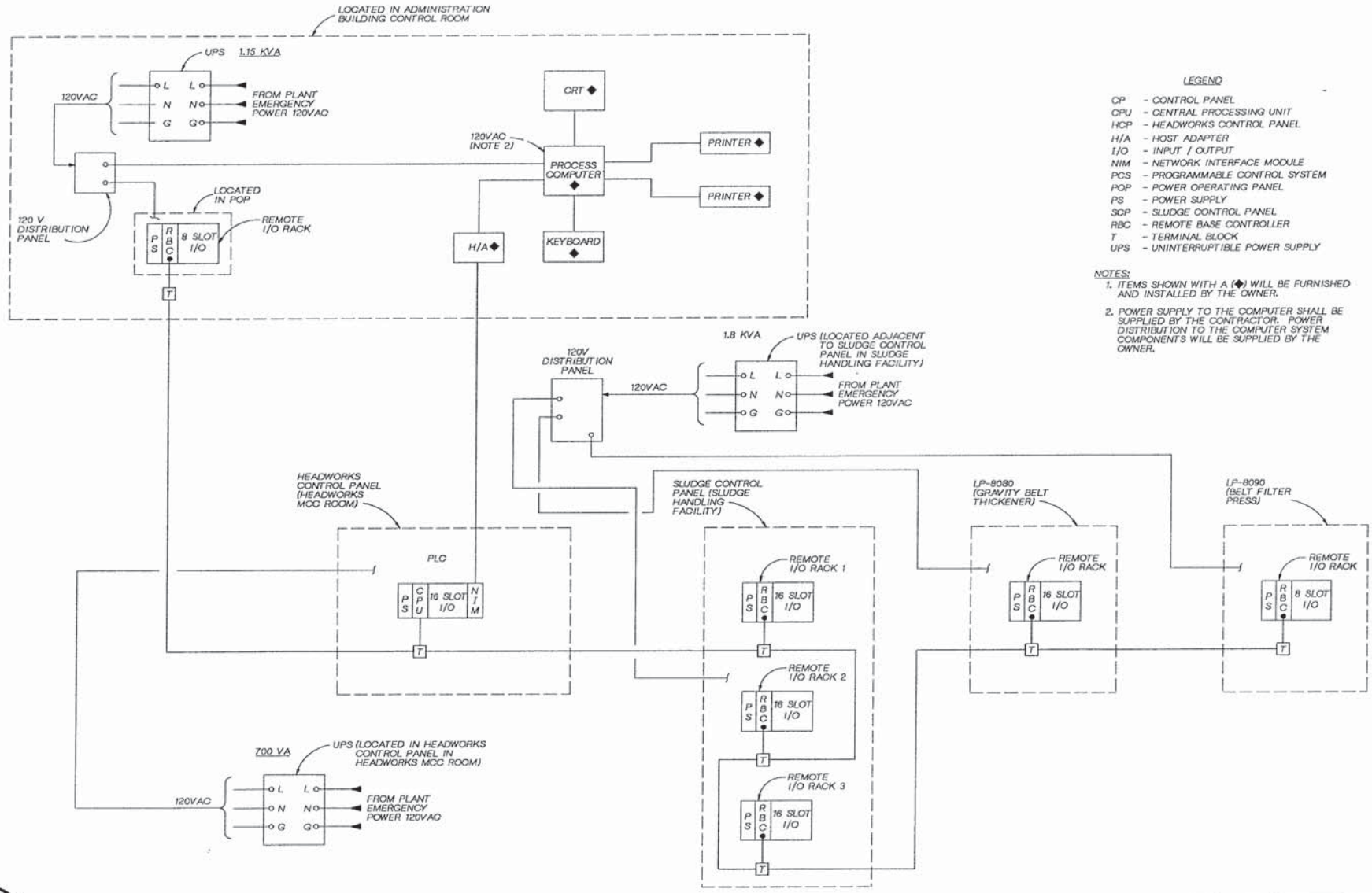

LEGEND

CP	- CONTROL PANEL
CPU	- CENTRAL PROCESSING UNIT
HCP	- HEADWORKS CONTROL PANEL
H/A	- HOST ADAPTER
I/O	- INPUT / OUTPUT
NIM	- NETWORK INTERFACE MODULE
PCS	- PROGRAMMABLE CONTROL SYSTEM
POP	- POWER OPERATING PANEL
PS	- POWER SUPPLY
SCP	- SLUDGE CONTROL PANEL
RBC	- REMOTE BASE CONTROLLER
T	- TERMINAL BLOCK
UPS	- UNINTERRUPTIBLE POWER SUPPLY

NOTES:
1. ITEMS SHOWN WITH A (◆) WILL BE FURNISHED AND INSTALLED BY THE OWNER.
2. POWER SUPPLY TO THE COMPUTER SHALL BE SUPPLIED BY THE CONTRACTOR. POWER DISTRIBUTION TO THE COMPUTER SYSTEM COMPONENTS WILL BE SUPPLIED BY THE OWNER.

KAREN A. HOOD REGISTERED PROFESSIONAL ENGINEER

CH2M HILL

DSGN	G. CONLEY
DR	G. SLAYTER
CHK	R BAKER
APVD	K HOOD

NO.	DATE	REVISION	BY	APVD

REUSE OF DOCUMENTS
THIS DOCUMENT, AND THE IDEAS AND DESIGNS INCORPORATED HEREIN, AS AN INSTRUMENT OF PROFESSIONAL SERVICE, IS THE PROPERTY OF CH2M HILL AND IS NOT TO BE USED, IN WHOLE OR IN PART, FOR ANY OTHER PROJECT WITHOUT THE WRITTEN AUTHORIZATION OF CH2M HILL.
©CH2M HILL

BAR IS ONE INCH ON ORIGINAL DRAWING. 0 1"
IF NOT ONE INCH ON THIS SHEET, ADJUST SCALES ACCORDINGLY.

CITY OF WENATCHEE, WASHINGTON
WASTEWATER TREATMENT PLANT IMPROVEMENTS

INSTRUMENTATION AND CONTROL
CONTROL SYSTEM BLOCK DIAGRAM

DWG NO. 300-N-10
DATE NOV. 1990
PROJ NO. SEA24579.N1

DATE: 11-6-90 DLC
DRAWN BY: MAXEY-SUHR DESIGNED BY: G. CONLEY
DGN NAME: 0:/PROJ2/WENATCHE/WE300N-K.DGN

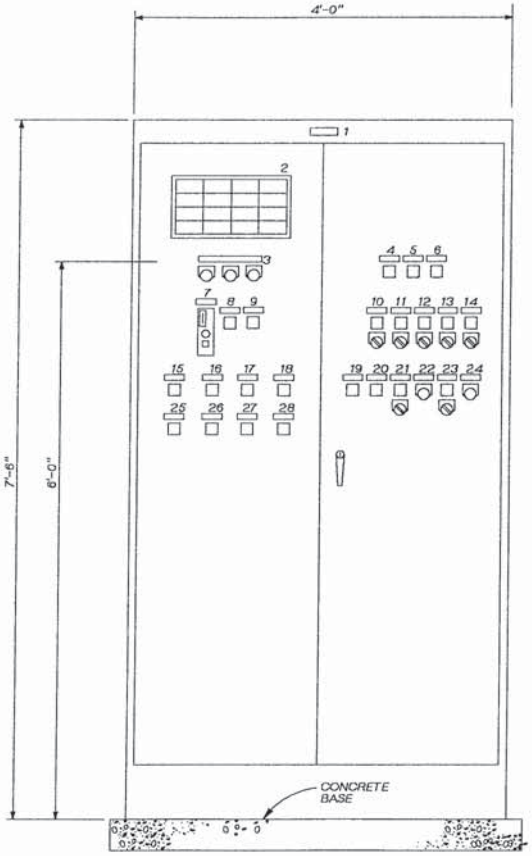

HEADWORKS CONTROL PANEL ELEVATION

1½" = 1'-0"

NOTES:
1. PANEL ENCLOSURE SHALL BE 2'-6" DEEP. ALL DIMENSIONS ARE NOMINAL.
2. SECURE ENCLOSURE TO CONCRETE PAD WITH ⅜" SST CONCRETE ANCHORS.
3. FOR PANEL LOCATION SEE DWG NO. 400-E-7.
4. CONTRACTOR TO MOUNT UPS INSIDE THE HEADWORKS CONTROL PANEL.

CONTROL PANEL SCHEDULE

ITEM NO.	TAG NO.	NAMEPLATE INSCRIPTION (DESCRIPTION) FIRST LINE / SECOND LINE / THIRD LINE	COMPONENT NO.
1	-	HEADWORKS / CONTROL PANEL	-
2	(SEE SCHEDULE)	(ANNUNCIATOR)	N30
3	HS-5000	ALARM ANNUNCIATOR [ACK. RESET. TEST]	M16
4	QL-5081 [ON]	GRIT CHAMBER / MECHANISM NO.1 / M-5081	M6
5	QL-5082 [ON]	GRIT CHAMBER / MECHANISM NO.2 / M-5082	M6
6	QL-5130 [ON]	CHANNEL / AERATION BLOWER / B-5130	M6
7	ASH-5030 [LEL], ASX-5030 [FAIL]	HEADWORKS BLDG. / GAS DETECTION / ASH-5030	N29
8	QL-5071 [OFF]	TRUCK LOADING / SWITCH POSITION / HS-5071	M6
9	QL-5071 [REMOTE]	TRUCK LOADING / SWITCH POSITION / HS-5071	M6
10	QL-5111 [ON]	GRIT CHAMBER / PUMP NO. 1 / P-5111	M6
	HS-5111 [HOA]		M22
11	QL-5112 [ON]	GRIT CHAMBER / PUMP NO. 2 / P-5112	M6
	HS-5112 [HOA]		M22
12	QL-5121 [ON]	GRIT CHAMBER / BLOWER NO.1 / B-5121	M6
	HS-5121 [HOA]		M22
13	QL-5122 [ON]	GRIT CHAMBER / BLOWER NO. 2 / B-5122	M6
	HS-5122 [HOA]		M22
14	QL-5090 [ON]	GRIT / CLASSIFIER / M-5090	M6
	HS-5090 [HOA]		M22
15	QL-5051 [ON]	MECHANICAL / BAR SCREEN NO. 1 / M-5051	M6
16	QL-5052 [ON]	MECHANICAL / BAR SCREEN NO. 2 / M-5052	M6
17	QL-5071 [ON]	SCREENINGS / PRESS NO. 1 / M-5071	M6
18	QL-5072 [ON]	SCREENINGS / PRESS NO. 2 / M-5072	M6
19	QL-6011 [ON]	PRIMARY / CLARIFIER NO. 1 / M-6011	M6
20	QL-6012 [ON]	PRIMARY / CLARIFIER NO. 2 / M-6012	M6
21	QL-6021 [ON]	PRIMARY / SLUDGE-SCUM / PUMP NO. 1 P-6021	M6
	HS-6021 [HOA]		M22
22	HS-6021 [RESET]	PRIMARY / SLUDGE-SCUM / PUMP NO.1 P-6021	M16
23	QL-6022 [ON]	PRIMARY / SLUDGE-SCUM / PUMP NO. 2 P-6022	M6
	HS-6022 [HOA]		M22
24	HS-6022 [RESET]	PRIMARY / SLUDGE-SCUM / PUMP NO.2 P-6022	M16
25	QL-5051 [AUTO]	MECHANICAL / BAR SCREEN NO.1 / M-5051	M6
26	QL-5052 [AUTO]	MECHANICAL / BAR SCREEN NO.2 / M-5052	M6
27	QL-5071 [AUTO]	SCREENINGS / PRESS NO.1 / M-5071	M6
28	QL-5072 [AUTO]	SCREENINGS / PRESS NO.2 / M-5072	M6

ANNUNCIATOR SCHEDULE

COL-ROW	TAG NO.	WINDOW INSCRIPTION FIRST LINE / SECOND LINE / THIRD LINE
1-1	AAH-5030	BAR SCREENS / COMBUSTIBLE GAS / HIGH LEVEL
1-2	AAX-5030	COMBUSTIBLE / GAS DETECTOR / FAILURE
1-3	-	SPARE
1-4	LAH-5020	BAR SCREEN / LEVEL / HIGH
2-1	NAH-5051	MECHANICAL BAR / SCREEN NO. 1 / FAILURE
2-2	NAH-5052	MECHANICAL BAR / SCREEN NO. 2 / FAILURE
2-3	LDAH-5051	SCREEN LEVEL NO. 1 / DIFFERENTIAL / HIGH
2-4	LDAH-5052	SCREEN LEVEL NO. 2 / DIFFERENTIAL / HIGH
3-1	NAH-5071	SCREENINGS / PRESS NO. 1 / FAIL
3-2	NAH-5072	SCREENINGS / PRESS NO. 2 / FAIL
3-3	-	SPARE
3-4	-	SPARE
4-1	QA-5090	GRIT / SYSTEM / FAIL
4-2	NAH-6012	PRIMARY / CLARIFIER NO. 2 / HIGH TORQUE
4-3	PAH-6031	PRIM SLUDGE SCUM / PUMP NO.1 / HIGH PRESS.
4-4	PAH-6032	PRIM SLUDGE SCUM / PUMP NO.2 / HIGH PRESS.

KAREN A. HOOD — STATE OF WASHINGTON — REGISTERED PROFESSIONAL ENGINEER

CH2M HILL

DSGN	G.CONLEY
DR	MAXEY-SUHR
CHK	R BAKER
APVD	K HOOD

NO.	DATE	REVISION	BY	APVD

REUSE OF DOCUMENTS
THIS DOCUMENT, AND THE IDEAS AND DESIGNS INCORPORATED HEREIN, AS AN INSTRUMENT OF PROFESSIONAL SERVICE, IS THE PROPERTY OF CH2M HILL AND IS NOT TO BE USED, IN WHOLE OR IN PART, FOR ANY OTHER PROJECT WITHOUT THE WRITTEN AUTHORIZATION OF CH2M HILL.
© CH2M HILL

BAR IS ONE INCH ON ORIGINAL DRAWING. 0 — 1" IF NOT ONE INCH ON THIS SHEET, ADJUST SCALES ACCORDINGLY.

CITY OF WENATCHEE, WASHINGTON
WASTEWATER TREATMENT PLANT IMPROVEMENTS

INSTRUMENTATION AND CONTROL
HEADWORKS CONTROL PANEL ELEVATION AND SCHEDULE

DWG NO. 300-N-11
DATE NOV. 1990
PROJ NO. SEA24579.N1