DATE: 11-6-90 DLC
DRAWN BY: MAXEY-SUHR DESIGNED BY: G. CONLEY
DGN NAME: 0:/PROJ2/WENATCHE/WE300N-K.DGN

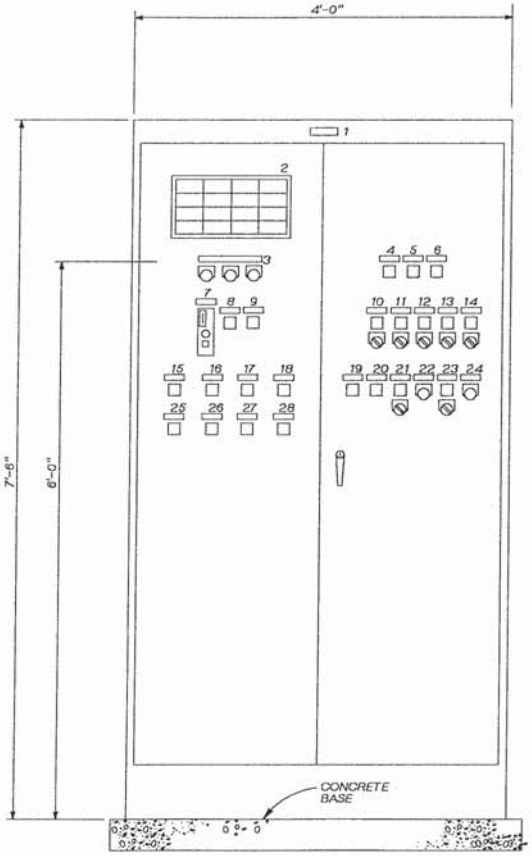

HEADWORKS CONTROL PANEL ELEVATION

1½" = 1'-0"

NOTES:
1. PANEL ENCLOSURE SHALL BE 2'-6" DEEP. ALL DIMENSIONS ARE NOMINAL.
2. SECURE ENCLOSURE TO CONCRETE PAD WITH ⅜" SST CONCRETE ANCHORS.
3. FOR PANEL LOCATION SEE DWG NO. 400-E-7.
4. CONTRACTOR TO MOUNT UPS INSIDE THE HEADWORKS CONTROL PANEL.

CONTROL PANEL SCHEDULE

ITEM NO.	TAG NO.	NAMEPLATE INSCRIPTION (DESCRIPTION) FIRST LINE / SECOND LINE / THIRD LINE	COMPONENT NO.
1	-	HEADWORKS / CONTROL PANEL	-
2	(SEE SCHEDULE)	(ANNUNCIATOR)	N30
3	HS-5000	ALARM ANNUNCIATOR [ACK. RESET. TEST]	M16
4	QL-5081 [ON]	GRIT CHAMBER / MECHANISM NO.1 / M-5081	M6
5	QL-5082 [ON]	GRIT CHAMBER / MECHANISM NO.2 / M-5082	M6
6	QL-5130 [ON]	CHANNEL / AERATION BLOWER / B-5130	M6
7	ASH-5030 [LEL], ASX-5030 [FAIL]	HEADWORKS BLDG. / GAS DETECTION / ASH-5030	N29
8	QL-5071 [OFF]	TRUCK LOADING / SWITCH POSITION / HS-5071	M6
9	QL-5071 [REMOTE]	TRUCK LOADING / SWITCH POSITION / HS-5071	M6
10	QL-5111 [ON]	GRIT CHAMBER / PUMP NO. 1 / P-5111	M6
	HS-5111 [HOA]		M22
11	QL-5112 [ON]	GRIT CHAMBER / PUMP NO. 2 / P-5112	M6
	HS-5112 [HOA]		M22
12	QL-5121 [ON]	GRIT CHAMBER / BLOWER NO.1 / B-5121	M6
	HS-5121 [HOA]		M22
13	QL-5122 [ON]	GRIT CHAMBER / BLOWER NO. 2 / B-5122	M6
	HS-5122 [HOA]		M22
14	QL-5090 [ON]	GRIT / CLASSIFIER / M-5090	M6
	HS-5090 [HOA]		M22
15	QL-5051 [ON]	MECHANICAL / BAR SCREEN NO. 1 / M-5051	M6
16	QL-5052 [ON]	MECHANICAL / BAR SCREEN NO. 2 / M-5052	M6
17	QL-5071 [ON]	SCREENINGS / PRESS NO. 1 / M-5071	M6
18	QL-5072 [ON]	SCREENINGS / PRESS NO. 2 / M-5072	M6
19	QL-6011 [ON]	PRIMARY / CLARIFIER NO. 1 / M-6011	M6
20	QL-6012 [ON]	PRIMARY / CLARIFIER NO. 2 / M-6012	M6
21	QL-6021 [ON]	PRIMARY / SLUDGE-SCUM / PUMP NO. 1 P-6021	M6
	HS-6021 [HOA]		M22
22	HS-6021 [RESET]	PRIMARY / SLUDGE-SCUM / PUMP NO.1 P-6021	M16
23	QL-6022 [ON]	PRIMARY / SLUDGE-SCUM / PUMP NO. 2 P-6022	M6
	HS-6022 [HOA]		M22
24	HS-6022 [RESET]	PRIMARY / SLUDGE-SCUM / PUMP NO.2 P-6022	M16
25	QL-5051 [AUTO]	MECHANICAL / BAR SCREEN NO.1 / M-5051	M6
26	QL-5052 [AUTO]	MECHANICAL / BAR SCREEN NO.2 / M-5052	M6
27	QL-5071 [AUTO]	SCREENINGS / PRESS NO.1 / M-5071	M6
28	QL-5072 [AUTO]	SCREENINGS / PRESS NO.2 / M-5072	M6

ANNUNCIATOR SCHEDULE

COL-ROW	TAG NO.	WINDOW INSCRIPTION FIRST LINE / SECOND LINE / THIRD LINE
1-1	AAH-5030	BAR SCREENS / COMBUSTIBLE GAS / HIGH LEVEL
1-2	AAX-5030	COMBUSTIBLE / GAS DETECTOR / FAILURE
1-3	-	SPARE
1-4	LAH-5020	BAR SCREEN / LEVEL / HIGH
2-1	NAH-5051	MECHANICAL BAR / SCREEN NO. 1 / FAILURE
2-2	NAH-5052	MECHANICAL BAR / SCREEN NO. 2 / FAILURE
2-3	LDAH-5051	SCREEN LEVEL NO. 1 / DIFFERENTIAL / HIGH
2-4	LDAH-5052	SCREEN LEVEL NO. 2 / DIFFERENTIAL / HIGH
3-1	NAH-5071	SCREENINGS / PRESS NO. 1 / FAIL
3-2	NAH-5072	SCREENINGS / PRESS NO. 2 / FAIL
3-3	-	SPARE
3-4	-	SPARE
4-1	QA-5090	GRIT / SYSTEM / FAIL
4-2	NAH-6012	PRIMARY / CLARIFIER NO. 2 / HIGH TORQUE
4-3	PAH-6031	PRIM SLUDGE SCUM / PUMP NO.1 / HIGH PRESS.
4-4	PAH-6032	PRIM SLUDGE SCUM / PUMP NO.2 / HIGH PRESS.

KAREN A. HOOD — STATE OF WASHINGTON — REGISTERED PROFESSIONAL ENGINEER

CH2M HILL

DSGN	G.CONLEY
DR	MAXEY-SUHR
CHK	R BAKER
APVD	K HOOD

NO.	DATE	REVISION	BY	APVD

REUSE OF DOCUMENTS
THIS DOCUMENT, AND THE IDEAS AND DESIGNS INCORPORATED HEREIN, AS AN INSTRUMENT OF PROFESSIONAL SERVICE, IS THE PROPERTY OF CH2M HILL AND IS NOT TO BE USED, IN WHOLE OR IN PART, FOR ANY OTHER PROJECT WITHOUT THE WRITTEN AUTHORIZATION OF CH2M HILL.
© CH2M HILL

BAR IS ONE INCH ON ORIGINAL DRAWING. 0 — 1" IF NOT ONE INCH ON THIS SHEET, ADJUST SCALES ACCORDINGLY.

CITY OF WENATCHEE, WASHINGTON
WASTEWATER TREATMENT PLANT IMPROVEMENTS

INSTRUMENTATION AND CONTROL
HEADWORKS CONTROL PANEL ELEVATION AND SCHEDULE

DWG NO. 300-N-11
DATE NOV. 1990
PROJ NO. SEA24579.N1

DATE: 11-4-90 DLC
DRAWN BY: G. SLAYTER DESIGNED BY: G. CONLEY
DGN NAME: O:/PROJ2/WENATCHE/WE300N-L.DGN

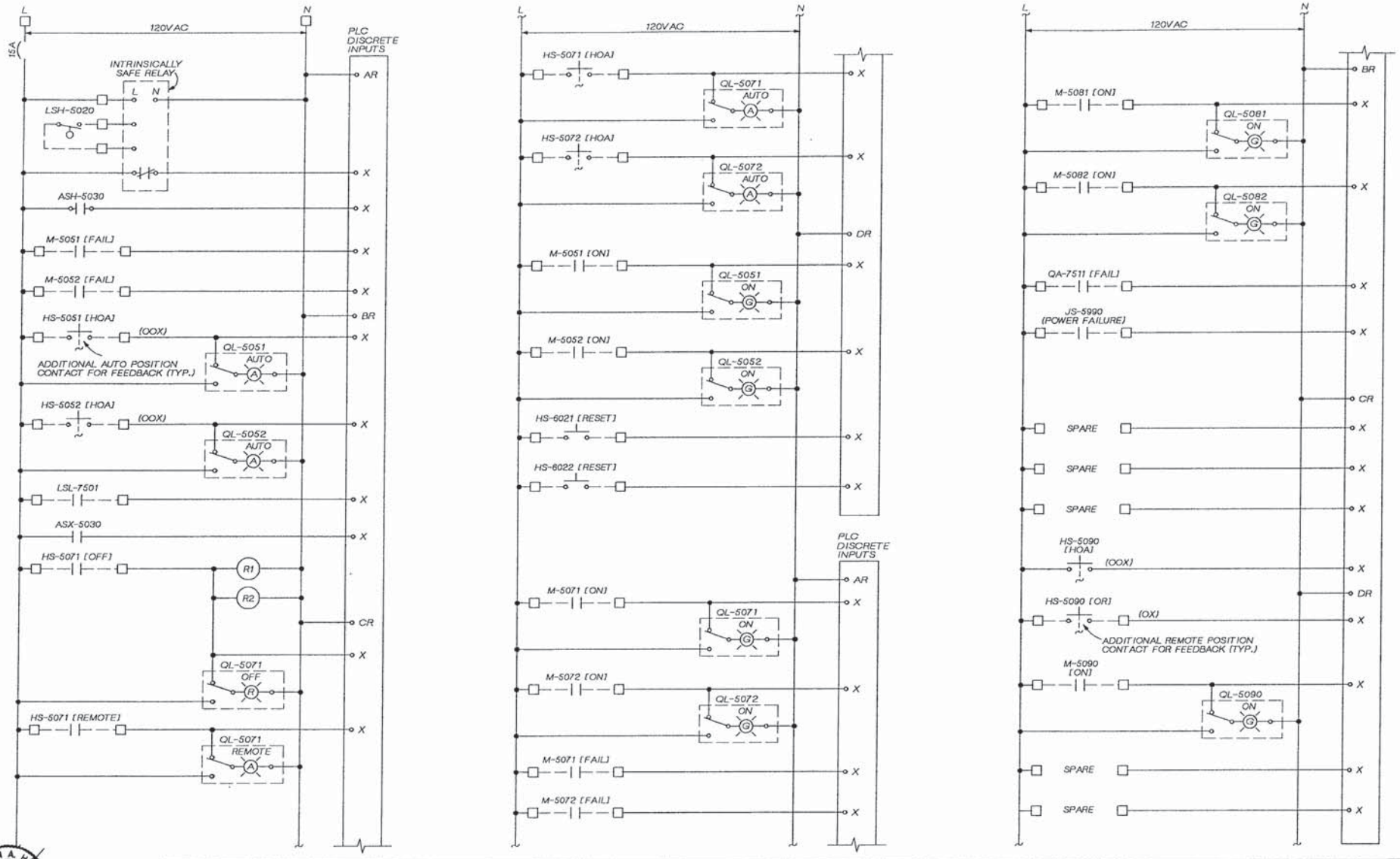

DSGN G. CONLEY					
DR G. SLAYTER					
CHK R. BAKER					
APVD K. HOOD	NO.	DATE	REVISION	BY	APVD

CH2M HILL

REUSE OF DOCUMENTS
THIS DOCUMENT, AND THE IDEAS AND DESIGNS INCORPORATED HEREIN, AS AN INSTRUMENT OF PROFESSIONAL SERVICE, IS THE PROPERTY OF CH2M HILL AND IS NOT TO BE USED, IN WHOLE OR IN PART, FOR ANY OTHER PROJECT WITHOUT THE WRITTEN AUTHORIZATION OF CH2M HILL.
©CH2M HILL

BAR IS ONE INCH ON ORIGINAL DRAWING. 0 1" IF NOT ONE INCH ON THIS SHEET, ADJUST SCALES ACCORDINGLY.

CITY OF WENATCHEE, WASHINGTON
WASTEWATER TREATMENT PLANT IMPROVEMENTS

INSTRUMENTATION AND CONTROL
HEADWORKS CONTROL PANEL ELEMENTARY DIAGRAM

DWG NO. 300-N-12
DATE NOV. 1990
PROJ. NO. SEA24579.N1

DATE: 11-6-11-6-90 DLC
DRAWN BY: G. SLAYTER DESIGNED BY: G. CONLEY
DGN NAME: O:/PROJ2/WENATCHE/WE300N-M.DGN

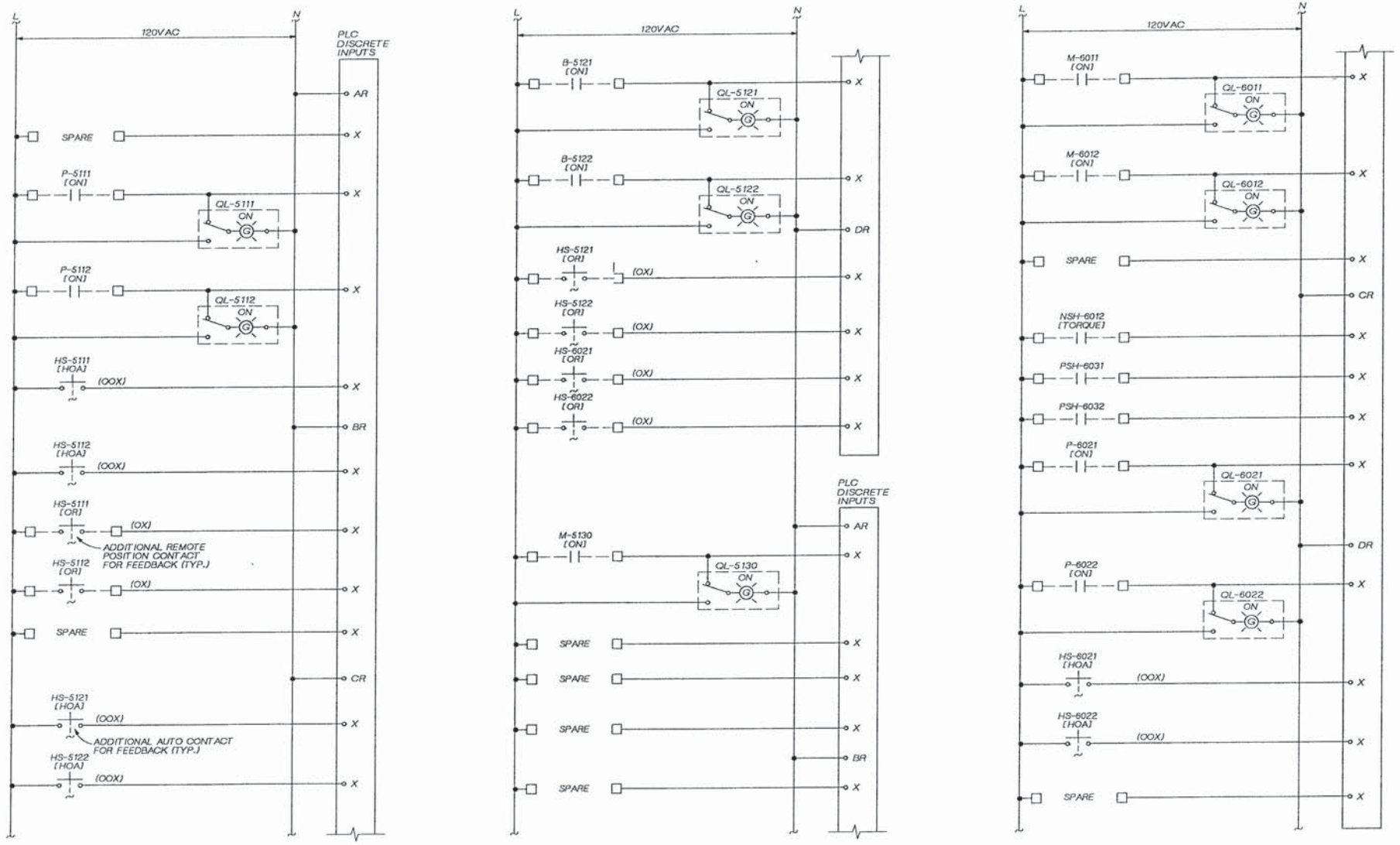

KAREN A. HOOD REGISTERED PROFESSIONAL ENGINEER

CH2M HILL

DSGN	G. CONLEY
DR	G. SLAYTER
CHK	R. BAKER
APVD	K. HOOD

NO.	DATE	REVISION	BY	APVD

REUSE OF DOCUMENTS

THIS DOCUMENT, AND THE IDEAS AND DESIGNS INCORPORATED HEREIN, AS AN INSTRUMENT OF PROFESSIONAL SERVICE, IS THE PROPERTY OF CH2M HILL AND IS NOT TO BE USED, IN WHOLE OR IN PART, FOR ANY OTHER PROJECT WITHOUT THE WRITTEN AUTHORIZATION OF CH2M HILL.

©CH2M HILL

BAR IS ONE INCH ON ORIGINAL DRAWING. 0 1" IF NOT ONE INCH ON THIS SHEET, ADJUST SCALES ACCORDINGLY.

CITY OF WENATCHEE, WASHINGTON
WASTEWATER TREATMENT PLANT IMPROVEMENTS

INSTRUMENTATION AND CONTROL
HEADWORKS CONTROL PANEL
ELEMENTARY DIAGRAM

DWG NO. 300-N-13
DATE NOV. 1990
PROJ. NO. SEA24579.N1

DATE: 11-6-900
DRAWN BY: G. SLAYTER DESIGNED BY: G. CONLEY
DGN NAME: O:/PROJ2/WENATCHE/WE300N-N.DGN

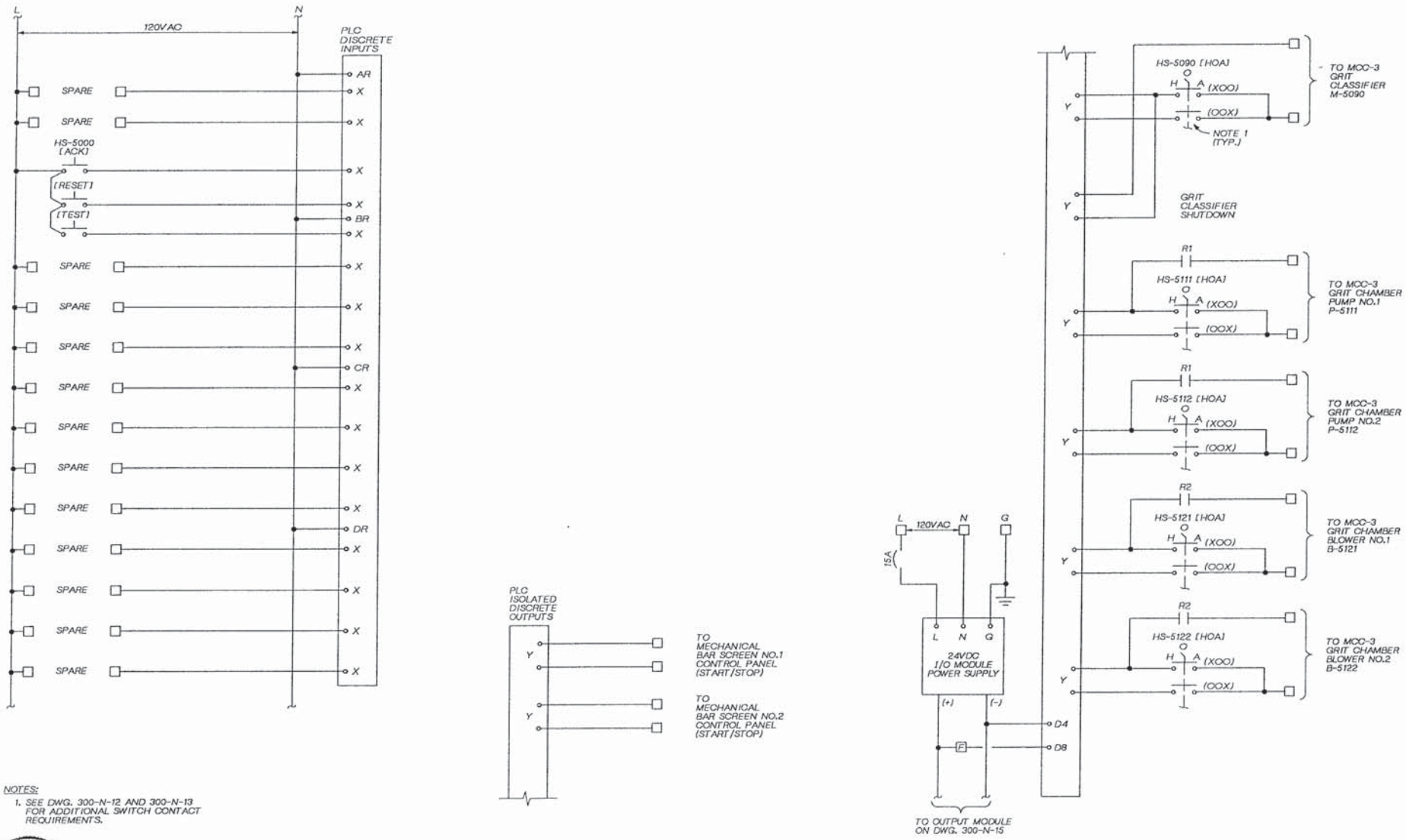

NOTES:

1. SEE DWG. 300-N-12 AND 300-N-13 FOR ADDITIONAL SWITCH CONTACT REQUIREMENTS.

KAREN A. HOOD — STATE OF WASHINGTON — PROFESSIONAL ENGINEER

CH2M HILL

DSGN	G. CONLEY
DR	G. SLAYTER
CHK	R BAKER
APVD	K HOOD

NO.	DATE	REVISION	BY	APVD

REUSE OF DOCUMENTS

THIS DOCUMENT, AND THE IDEAS AND DESIGNS INCORPORATED HEREIN, AS AN INSTRUMENT OF PROFESSIONAL SERVICE, IS THE PROPERTY OF CH2M HILL AND IS NOT TO BE USED, IN WHOLE OR IN PART, FOR ANY OTHER PROJECT WITHOUT THE WRITTEN AUTHORIZATION OF CH2M HILL.

©CH2M HILL

BAR IS ONE INCH ON ORIGINAL DRAWING. 0 1"
IF NOT ONE INCH ON THIS SHEET, ADJUST SCALES ACCORDINGLY.

CITY OF WENATCHEE, WASHINGTON
WASTEWATER TREATMENT PLANT IMPROVEMENTS

INSTRUMENTATION AND CONTROL
HEADWORKS CONTROL PANEL ELEMENTARY DIAGRAM

DWG NO. 300-N-14
DATE NOV. 1990
PROJ NO. SEA24579.N1

DATE: 11-6-90 DLC
DRAWN BY: G. SLAYTER DESIGNED BY: G. CONLEY
DGN NAME: O:/PROJ2/WENATCHE/WE300N-O.DGN

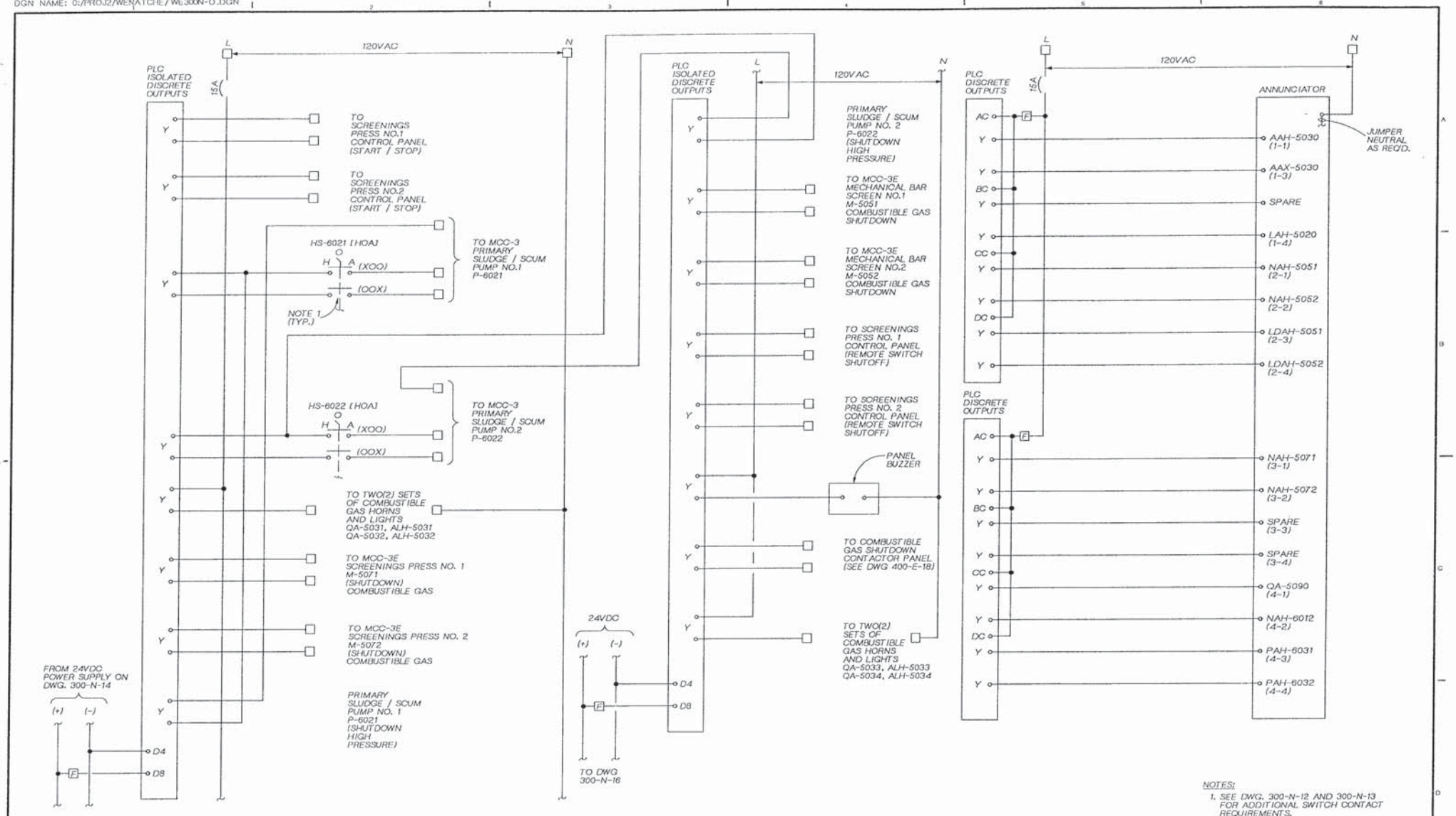

NOTES:

1. SEE DWG. 300-N-12 AND 300-N-13 FOR ADDITIONAL SWITCH CONTACT REQUIREMENTS.

KAREN A. HOOD REGISTERED PROFESSIONAL ENGINEER

CH2M HILL

DSGN	G. CONLEY
DR	G. SLAYTER
CHK	R. BAKER
APVD	K. HOOD

NO.	DATE	REVISION	BY	APVD

REUSE OF DOCUMENTS

THIS DOCUMENT, AND THE IDEAS AND DESIGNS INCORPORATED HEREIN, AS AN INSTRUMENT OF PROFESSIONAL SERVICE, IS THE PROPERTY OF CH2M HILL AND IS NOT TO BE USED, IN WHOLE OR IN PART, FOR ANY OTHER PROJECT WITHOUT THE WRITTEN AUTHORIZATION OF CH2M HILL.

©CH2M HILL

BAR IS ONE INCH ON ORIGINAL DRAWING. 0 1 2 3 4 5
IF NOT ONE INCH ON THIS SHEET, ADJUST SCALES ACCORDINGLY.

CITY OF WENATCHEE, WASHINGTON
WASTEWATER TREATMENT PLANT IMPROVEMENTS

INSTRUMENTATION AND CONTROL

HEADWORKS CONTROL PANEL ELEMENTARY DIAGRAM

DWG NO. 300-N-15
DATE NOV 1990
PROJ NO. SEA24579.N1

DATE: 11-6-90 DLC
DRAWN BY: G. SLAYTER DESIGNED BY: G. CONLEY
DGN NAME: O:/PROJ2/WENATCHE/WE300N-P.DGN

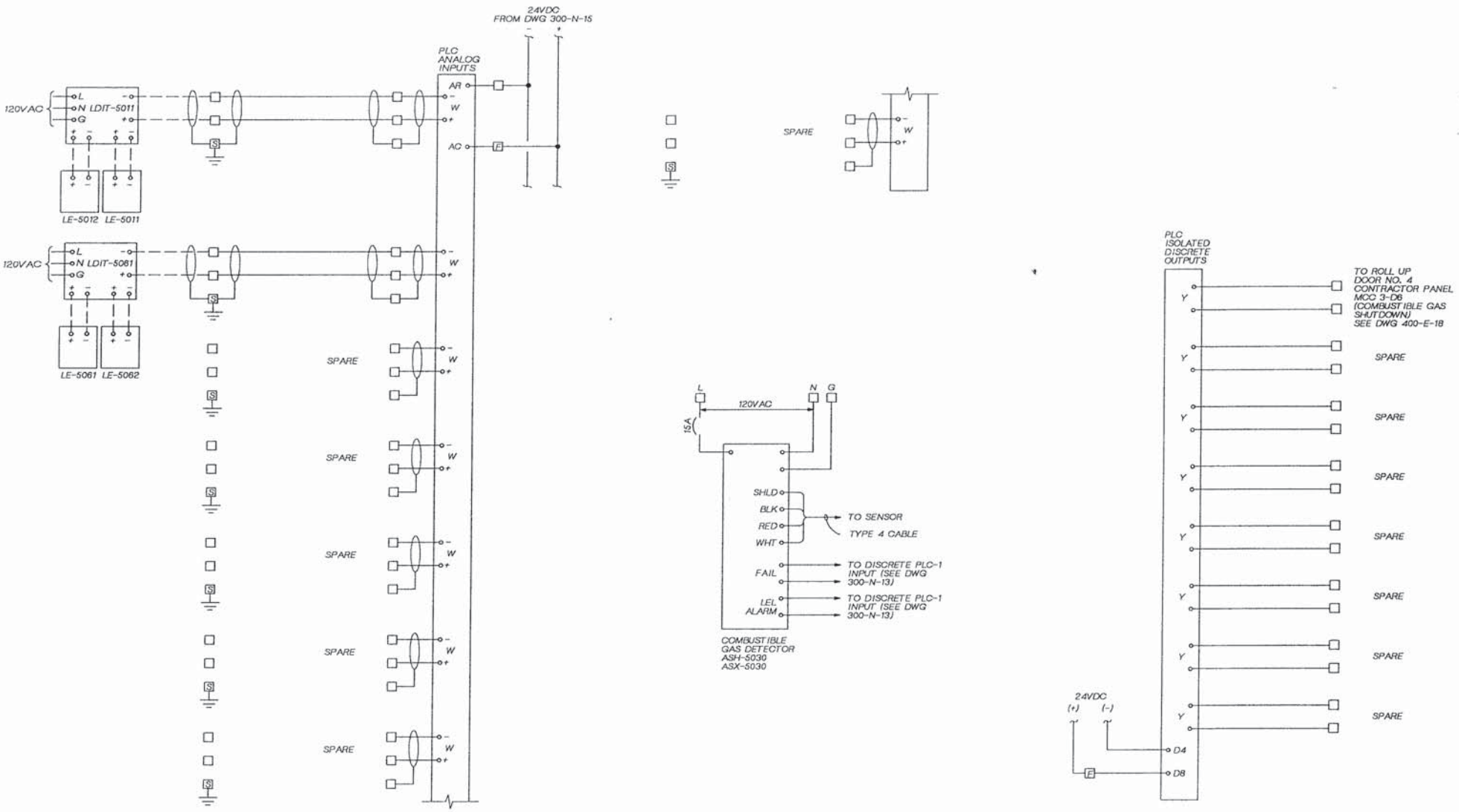

DSGN G. CONLEY					
DR G. SLAYTER					
CHK R BAKER					
APVD K HOOD	NO.	DATE	REVISION	BY	APVD

REUSE OF DOCUMENTS
THIS DOCUMENT, AND THE IDEAS AND DESIGNS INCORPORATED HEREIN, AS AN INSTRUMENT OF PROFESSIONAL SERVICE, IS THE PROPERTY OF CH2M HILL AND IS NOT TO BE USED, IN WHOLE OR IN PART, FOR ANY OTHER PROJECT WITHOUT THE WRITTEN AUTHORIZATION OF CH2M HILL.
©CH2M HILL

BAR IS ONE INCH ON ORIGINAL DRAWING.
0 1"
IF NOT ONE INCH ON THIS SHEET, ADJUST SCALES ACCORDINGLY.

CITY OF WENATCHEE, WASHINGTON
WASTEWATER TREATMENT PLANT IMPROVEMENTS

INSTRUMENTATION AND CONTROL
HEADWORKS CONTROL PANEL
ELEMENTARY DIAGRAM

DWG NO. 300-N-16
DATE NOV. 1990
PROJ. NO. SEA24579.N1

DATE: 11-4-90 DLC
DRAWN BY: G. SLAYTER DESIGNED BY: G. CONLEY
DGN NAME: 0:/PROJ2/WENATCHE/WE300N-Q.DGN

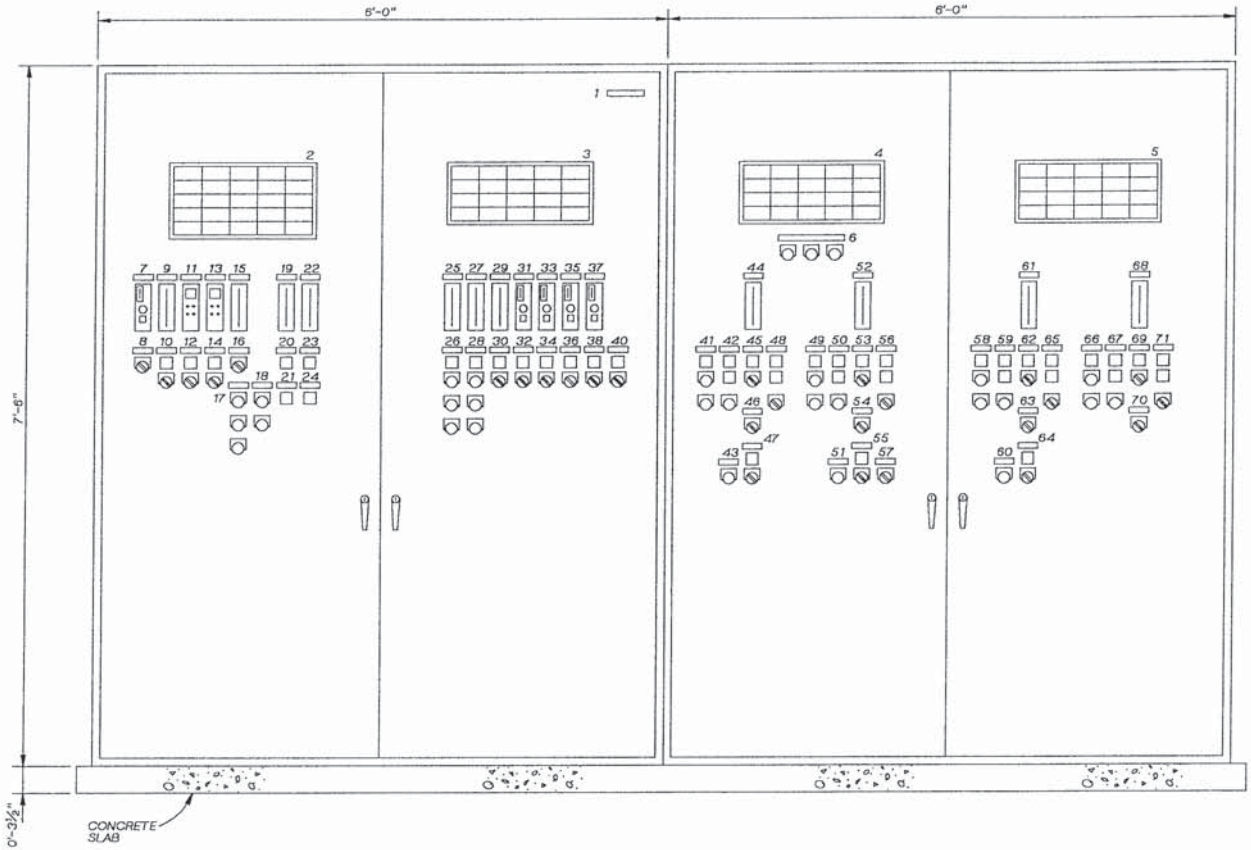

SLUDGE CONTROL PANEL (SCP)
1½" = 1'-0"

NOTE:
1. SECURE PANEL ENCLOSURE TO CONCRETE BASE WITH ⅜" CONCRETE ANCHORS.
2. PANEL ENCLOSURE SHALL BE 2'-6" DEEP. ALL DIMENSIONS ARE NOMINAL.
3. FOR PANEL LOCATION SEE 400-E-13.
4. SLUDGE CONTROL PANEL SHALL CONSIST OF TWO(2) 6'-0" PANELS ADJACENT TO EACH OTHER AS SHOWN. CONTRACTOR TO BOLT PANELS TOGETHER AT SITE. EACH PANEL SHALL HAVE AN OPEN SIDE SO THERE SHALL BE NO SIDE WALL BETWEEN THE PANELS.

KAREN A. HOOD — STATE OF WASHINGTON — 23411 — REGISTERED PROFESSIONAL ENGINEER

CH2M HILL

DSGN	G. CONLEY
DR	G. SLAYTER
CHK	R BAKER
APVD	K HOOD

NO.	DATE	REVISION	BY	APVD

REUSE OF DOCUMENTS
THIS DOCUMENT, AND THE IDEAS AND DESIGNS INCORPORATED HEREIN, AS AN INSTRUMENT OF PROFESSIONAL SERVICE, IS THE PROPERTY OF CH2M HILL AND IS NOT TO BE USED, IN WHOLE OR IN PART, FOR ANY OTHER PROJECT WITHOUT THE WRITTEN AUTHORIZATION OF CH2M HILL.
©CH2M HILL

BAR IS ONE INCH ON ORIGINAL DRAWING. 0 1"
IF NOT ONE INCH ON THIS SHEET, ADJUST SCALES ACCORDINGLY.

CITY OF WENATCHEE, WASHINGTON
WASTEWATER TREATMENT PLANT IMPROVEMENTS

INSTRUMENTATION AND CONTROL
SLUDGE CONTROL PANEL ELEVATION

DWG NO. 300-N-17
DATE NOV. 1990
PROJ NO. SEA24579.N1

DATE: 11-4-90 DLC
DRAWN BY: MAXEY-SUHR DESIGNED BY: G. CONLEY
DGN NAME: O:/PROJ2/WENATCHE/WE300N-R.DGN

SLUDGE CONTROL PANEL SCHEDULE

ITEM NO.	TAG NO.	NAMEPLATE INSCRIPTION DESCRIPTION FIRST LINE / SECOND LINE / THIRD LINE	SPEC NO.
1	--	SLUDGE CONTROL PANEL	-
2	--	(ANNUNCIATOR NO. 1)	N30
3	--	(ANNUNCIATOR NO. 2)	N30
4	--	(ANNUNCIATOR NO. 3)	N30
5	--	(ANNUNCIATOR NO. 4)	N30
6	HS-8000	ALARM ANNUNCIATOR (ACK, RESET, TEST)	M16
7	FIC-8620	DIGESTER SLUDGE / FLOW / CONTROLLER	S6
8	HS-8630 (OCA)	SLUDGE TRANSFER / PUMP NO. 2 BYPASS VLV / FV-8630	M22
9	LI-8610	SLUDGE BLENDING / TANK LEVEL / LI-8610	S26
10	QL-8030 (ON) HS-8030 (HOA)	SLUDGE / MIXER / M-8030	M6 M22
11	ASH-8770 (ASX-8770) ASH-8771	1-TRUCK LOADING / 2-GAS PIPING RM / COMBUSTIBLE GAS	N29
12	QL-8021 (ON) HS-8021 (HOA)	SLUDGE TRANSFER / PUMP NO. 1 / P-8021	M6 M22
13	ASH-8801 (ASX-8801) ASH-8820	1-GAS COMP. ROOM / 2-BOILER ROOM / COMBUSTIBLE GAS	N29
14	QL-8022 (ON) HS-8022 (HOA)	SLUDGE TRANSFER / PUMP NO. 2 / P-8022	M6 M22
15	LI-8010	DIGESTER NO. 3 / LEVEL / LI-8010	S26
16	HS-8640 (OCA)	SLUDGE TRANSFER / PUMP NO. 1 DISCH VLV / FV-8640	M22
17	HS-8021 (START) HS-8021 (STOP) HS-8021 (RESET)	SLUDGE TRANSFER / PUMP NO. 1	M16 M16 M16
18	HS-8022 (START) HS-8022 (STOP)	SLUDGE TRANSFER / PUMP NO. 2	M16 M16
19	FI-8831	MAIN BOILER / DIG. GAS FLOW / FI-8831	S26
20	QL-8321 (ON)	GAS COMPRESSOR / NO. 1/ GC-8321	M6
21	QL-8322 (ON)	GAS COMPRESSOR / NO. 2 / GC-8322	M6
22	FI-8832	WASTE GAS/ BURNER GAS FLOW / FI-8832	S26
23	QL-8331 (ON)	MAIN BOILER / B-8331	M6
24	QL-8340 (ON)	WASTE GAS / BURNER / BU-8340	M6
25	TI-8910	SLUDGE CIRC / PMP NO. 1 TEMP / TI-8910	S26
26	QL-8571 (ON) HS-8571 (START) HS-8571 (STOP) HS-8571 (RESET)	SLUDGE CIRC / PUMP NO. 1 / P-8571	M6 M16 M16 M16
27	TI-8920	SLUDGE CIRC / PUMP NO. 2 TEMP / TI-8920	S26
28	QL-8572 (ON) HS-8572 (START) HS-8572 (STOP) HS-8572 (RESET)	SLUDGE CIRC / PUMP NO. 2 / P-8572	M6 M16 M16 M16
29	TI-8870	PRIMARY / HW TEMPERATURE / TI-8870	S26
30	QL-8542 (ON) HS-8542 (OO)	PRIMARY HW / CIRCULATION PUMP NO. 2 / P-8542	M6 M22
31	THK-8840 (A-M)	POLYMER / HW VALVE / TCV-8840	S12
32	QL-8541 (ON) HS-8541 (OO)	PRIMARY HW / CIRCULATION PUMP NO. 1 / P-8541	M6 M22
33	THK-8880 (A-M)	HEAT EXCHANGER NO. 1 / TEMP CONTROL VALVE / TCV-8880	S12
34	QL-8551 (ON) HS-8551 (HOA)	HEAT EXCHANGER / CIRC PUMP NO. 1 / P-8551	M6 M22
35	THK-8890 (A-M)	HEAT EXCHANGER NO. 2 / TEMP CONTROL VALVE / TCV-8890	S12
36	QL-8552 (ON) HS-8552 (HOA)	HEAT EXCHANGER / CIRC PUMP NO. 2 / P-8552	M6 M22
37	THK-8850 (A-M)	BOILER / RECIRC VALVE / TCV-8850	S12
38	QL-8521 (ON) HS-8521 (HOA)	BOILER / CIRCULATION PUMP NO. 1 / P-8521	M6 M22
39	SPARE		
40	QL-8522 (ON) HS-8522 (HOA)	BACKUP BOILER / CIRC. PUMP NO.2 / P-8522	M6 M22
41	QL-8211 (BATCH RUNNING) HS-8211 (START) HS-8211 (STOP)	POLYMER / TANK NO. 1 / BATCH	M6 M16 M16

SLUDGE CONTROL PANEL SCHEDULE (CONT'D)

ITEM NO.	TAG NO.	NAMEPLATE INSCRIPTION DESCRIPTION FIRST LINE / SECOND LINE / THIRD LINE	SPEC NO.
42	QL-8211 (MIX NEW) QL-8211 (BATCH READY) HS-8211 (RESET)	POLYMER / TANK NO. 1 / BATCH	M6 M6 M16
43	HS-8221 (RESET)	POLYMER PUMP / NO. 1 / P-8221	M16
44	LI-8211	POLYMER TANK / NO. 1 / LEVEL	S26
45	QL-8211 (ON) HS-8211 (HOA)	POLYMER TANK / NO. 1 MIXER / M-8211	M6 M22
46	HS-8211 (OCA)	POLYMER TANK / NO. 1 HW VALVE / FV-8211	M22
47	QL-8221 (ON) HS-8221 (HOA)	POLYMER PUMP / NO. 1 / P-8221	M6 M22
48	QL-8231 (OPEN) QL-8231 (CLOSE) HS-8231 (OCA)	POLYMER TANK / NO. 1 DISCH VALVE / FV-8231	M6 M6 M22
49	QL-8212 (BATCH RUNNING) HS-8212 (START) HS-8212 (STOP)	POLYMER / TANK NO. 2 / BATCH	M6 M16 M16
50	QL-8212 (MIX NEW) QL-8212 (BATCH READY) HS-8212 (RESET)	POLYMER / TANK NO. 2 / BATCH	M6 M6 M16
51	HS-8222 (RESET)	POLYMER PUMP / NO. 2 / P-8222	M16
52	LI-8212	POLYMER TANK / NO. 2 / LEVEL	S26
53	QL-8212 (ON) HS-8212 (HOA)	POLYMER TANK / NO. 2 MIXER / M-8212	M6 M22
54	HS-8212 (OCA)	POLYMER TANK / NO. 2 HW VALVE / FV-8212	M22
55	QL-8222 (ON) HS-8222 (HOA)	POLYMER PUMP / NO. 2 / P-8222	M6 M22
56	QL-8232 (OPEN) QL-8232 (CLOSE) HS-8232 (OCA)	POLYMER TANK / NO. 2 DISCH VALVE / FV-8232	M6 M6 M22
57	HS-8222 (TKNR-PRESS)	POLYMER PUMP / NO. 2 / CONTROL SELECT	M22
58	QL-8213 (BATCH RUNNING) HS-8213 (START) HS-8213 (STOP)	POLYMER / TANK NO. 3 / BATCH	M6 M16 M16
59	QL-8213 (MIX NEW) QL-8213 (BATCH READY) HS-8213 (RESET)	POLYMER / TANK NO. 3 / BATCH	M6 M6 M16
60	HS-8223 (RESET)	POLYMER PUMP / NO. 3 / P-8223	M16
61	LI-8213	POLYMER TANK / NO. 3 / LEVEL	S26
62	QL-8213 (ON) HS-8213 (HOA)	POLYMER TANK / NO. 3 MIXER / M-8213	M6 M22
63	HS-8213 (OCA)	POLYMER TANK / NO. 3 HW VALVE / FV-8213	M22
64	QL-8223 (ON) HS-8223 (HOA)	POLYMER PUMP / NO. 3 / P-8223	M6 M22
65	QL-8233 (OPEN) QL-8233 (CLOSE) HS-8233 (OCA)	POLYMER TANK / NO. 3 DISCH VALVE / FV-8233	M6 M6 M22
66	QL-8214 (BATCH RUNNING) HS-8214 (START) HS-8214 (STOP)	POLYMER / TANK NO. 4 / BATCH	M6 M16 M16
67	QL-8214 (MIX NEW) QL-8214 (BATCH READY) HS-8214 (RESET)	POLYMER / TANK NO. 4 / BATCH	M6 M6 M16
68	LI-8214	POLYMER TANK / NO. 4 / LEVEL	S26
69	QL-8214 (ON) HS-8214 (HOA)	POLYMER TANK / NO. 4 MIXER / M-8214	M6 M22
70	HS-8214 (OCA)	POLYMER TANK / NO. 4 HW VALVE / FV-8214	M22
71	QL-8234 (OPEN) QL-8234 (CLOSE) HS-8234 (OCA)	POLYMER TANK / NO. 4 DISCH VALVE / FV-8234	M6 M6 M22

KAREN A. HOOD — STATE OF WASHINGTON — 23411 — REGISTERED PROFESSIONAL ENGINEER

CH2M HILL

DSGN G. CONLEY
DR MAXEY-SUHR
CHK R BAKER
APVD K HOOD

NO.	DATE	REVISION	BY	APVD

REUSE OF DOCUMENTS
THIS DOCUMENT, AND THE IDEAS AND DESIGNS INCORPORATED HEREIN, AS AN INSTRUMENT OF PROFESSIONAL SERVICE, IS THE PROPERTY OF CH2M HILL AND IS NOT TO BE USED, IN WHOLE OR IN PART, FOR ANY OTHER PROJECT WITHOUT THE WRITTEN AUTHORIZATION OF CH2M HILL.
©CH2M HILL

BAR IS ONE INCH ON ORIGINAL DRAWING.
0 1"
IF NOT ONE INCH ON THIS SHEET, ADJUST SCALES ACCORDINGLY.

CITY OF WENATCHEE, WASHINGTON
WASTEWATER TREATMENT PLANT IMPROVEMENTS

INSTRUMENTATION AND CONTROL
SLUDGE CONTROL PANEL SCHEDULES

DWG NO. 300-N-18
DATE NOV. 1990
PROJ. NO. SEA24579.N1

DATE: 11-4-90 DLC
DRAWN BY: G. SLAYTER DESIGNED BY: G. CONLEY
DGN NAME: O:/PROJ2/WENATCHE/WE300N-S.DGN

ANNUNCIATOR NO.1

COL-ROW	TAG NO.	WINDOW INSCRIPTION FIRST LINE / SECOND LINE / THIRD LINE
1-1	QA-8321	GAS COMPRESSOR / NO.1 / TROUBLE
1-2	QA-8322	GAS COMPRESSOR / NO.2 / TROUBLE
1-3	QA-8331	MAIN / BOILER / FAILURE
1-4	QA-8340	WASTE GAS / BURNER / FAILURE
1-5	QA-8030	SLUDGE / MIXER / FAILURE
2-1	AAH-8801	COMBUSTIBLE GAS / HIGH LEVEL / COMPRESSOR ROOM
2-2	AAH-8820	COMBUSTIBLE GAS / HIGH LEVEL / BOILER ROOM
2-3	AAX-8801	COMBUSTIBLE / GAS DETECTOR / FAILURE
2-4	LAH-8010	DIGESTER NO.3 / HIGH / LEVEL
2-5	LAL-8010	DIGESTER NO.3 / LOW / LEVEL
3-1	LAH-8040	DRAIN SUMP / HIGH / LEVEL
3-2	PAH-8650	SLUDGE TRANSFER / PUMP NO.1 / HIGH DISCH. PRESS
3-3	QA-8020	SLUDGE / TRANSFER / FAILURE
3-4	QA-8021	SLUDGE TRANSFER / PUMP NO.1 / FAIL
3-5	QA-8022	SLUDGE TRANSFER / PUMP NO.2 / FAIL
4-1	AAH-8770	COMBUSTIBLE GAS / HIGH LEVEL / TRUCK LOADING
4-2	AAH-8771	COMBUSTIBLE GAS / HIGH LEVEL / GAS PIPING ROOM
4-3	AAX-8770	COMBUSTIBLE / GAS DETECTOR / FAILURE
4-4	LAH-8610	SLUDGE / BLENDING TANK / HIGH LEVEL
4-5	LAL-8610	SLUDGE / BLENDING TANK / LOW LEVEL
5-1	-	(SPARE)
5-2	-	(SPARE)
5-3	-	(SPARE)
5-4	-	(SPARE)
5-5	-	(SPARE)

ANNUNCIATOR NO.2

COL-ROW	TAG NO.	WINDOW INSCRIPTION FIRST LINE / SECOND LINE / THIRD LINE
1-1	TAH-8850	MAIN BOILER / HOT WATER / HIGH TEMP
1-2	TAL-8850	MAIN BOILER / HOT WATER / LOW TEMP
1-3	QA-8521	BOILER CIRC. / PUMP / FAIL
1-4	QA-8522	BACKUP BOILER / CIRC. PUMP / FAIL
1-5	-	(SPARE)
2-1	TAH-8870	PRIMARY / HOT WATER / HIGH TEMP
2-2	TAL-8870	PRIMARY / HOT WATER / LOW TEMP
2-3	TAH-8880	HEAT EXCHANGER / CIRC. PUMP NO.1 / HI WATER TEMP
2-4	TAH-8890	HEAT EXCHANGER / CIRC. PUMP NO.2 / HI WATER TEMP
2-5	QA-8551	HEAT EXCHANGER / CIRC. PUMP NO.1 / FAIL
3-1	TAH-8910	SLUDGE CIRC. / PUMP NO.1 / HI WATER TEMP
3-2	TAL-8910	SLUDGE CIRC. / PUMP NO.1 / LOW WATER TEMP
3-3	TAH-8920	SLUDGE CIRC. / PUMP NO.2 / HI WATER TEMP
3-4	TAL-8920	SLUDGE CIRC. / PUMP NO.2 / LOW WATER TEMP
3-5	QA-8552	HEAT EXCHANGER / CIRC. PUMP NO.2 / FAIL
4-1	PAL-8571	SLUDGE CIRC. / PUMP NO.1 / LOW DISCH. PRESS.
4-2	PAL-8572	SLUDGE CIRC. / PUMP NO.2 / LOW DISCH. PRESS.
4-3	QA-8571	SLUDGE CIRC. / PUMP NO.1 / FAIL
4-4	QA-8572	SLUDGE CIRC. / PUMP NO.2 / FAIL
4-5	-	(SPARE)

ANNUNCIATOR NO.3

COL-ROW	TAG NO.	WINDOW INSCRIPTION FIRST LINE / SECOND LINE / THIRD LINE
1-1	QA-8211	POLYMER TANK NO.1 / BATCH / NOT READY
1-2	QA-8212	POLYMER TANK NO.2 / BATCH / NOT READY
1-3	LAH-8211	POLYMER TANK NO.1 / LEVEL / HIGH
1-4	LAH-8212	POLYMER TANK NO.2 / LEVEL / HIGH
1-5	-	(SPARE)
2-1	QA-8211	POLYMER / BATCH NO.1 / FAIL
2-2	QA-8212	POLYMER / BATCH NO.2 / FAIL
2-3	LAL-8211	POLYMER TANK NO.1 / LEVEL / LOW
2-4	LAL-8212	POLYMER TANK NO.2 / LEVEL / LOW
2-5	-	(SPARE)
3-1	PAH-8241	POLYMER PUMP NO.1 / HIGH / DISCHARGE PRESSURE
3-2	FAL-8221	POLYMER PUMP NO.1 / LOW / FLOW
3-3	PAH-8242	POLYMER PUMP NO.2 / HIGH / DISCHARGE PRESSURE
3-4	FAL-8222	POLYMER PUMP NO.2 / LOW / FLOW
3-5	-	(SPARE)
4-1	QA-8211	POLYMER TANK NO.1 / MIXER / FAIL
4-2	QA-8212	POLYMER TANK NO.2 / MIXER / FAIL
4-3	QA-8221	POLYMER PUMP NO.1 / FAIL
4-4	QA-8222	POLYMER PUMP NO.2 / FAIL
4-5	-	(SPARE)

ANNUNCIATOR NO.4

COL-ROW	TAG NO.	WINDOW INSCRIPTION FIRST LINE / SECOND LINE / THIRD LINE
1-1	QA-8213	POLYMER TANK NO.3 / BATCH / NOT READY
1-2	QA-8214	POLYMER TANK NO.4 / BATCH / NOT READY
1-3	LAH-8213	POLYMER TANK NO.3 / LEVEL / HIGH
1-4	LAH-8214	POLYMER TANK NO.4 / LEVEL / HIGH
1-5	-	(SPARE)
2-1	QA-8213	POLYMER / BATCH NO.3 / FAIL
2-2	QA-8214	POLYMER / BATCH NO.4 /FAIL
2-3	LAL-8213	POLYMER TANK NO.3 / LEVEL / LOW
2-4	LAL-8214	POLYMER TANK NO.4 / LEVEL / LOW
2-5	-	(SPARE)
3-1	PAH-8243	POLYMER PUMP NO.3 / HIGH / DISCHARGE PRESSURE
3-2	FAL-8223	POLYMER PUMP NO.3 / LOW / FLOW
3-3	-	(SPARE)
3-4	-	(SPARE)
3-5	-	(SPARE)
4-1	QA-8213	POLYMER TANK NO.3 / MIXER / FAIL
4-2	QA-8214	POLYMER TANK NO.4 / MIXER / FAIL
4-3	QA-8223	POLYMER PUMP NO.3 / FAIL
4-4	-	(SPARE)
4-5	-	(SPARE)

KAREN A. HOOD STATE OF WASHINGTON 18331 REGISTERED PROFESSIONAL ENGINEER

CH2M HILL

DSGN G. CONLEY
DR G. SLAYTER
CHK R BAKER
APVD K HOOD

NO.	DATE	REVISION	BY	APVD

REUSE OF DOCUMENTS
THIS DOCUMENT, AND THE IDEAS AND DESIGNS INCORPORATED HEREIN, AS AN INSTRUMENT OF PROFESSIONAL SERVICE, IS THE PROPERTY OF CH2M HILL AND IS NOT TO BE USED, IN WHOLE OR IN PART, FOR ANY OTHER PROJECT WITHOUT THE WRITTEN AUTHORIZATION OF CH2M HILL.
©CH2M HILL

BAR IS ONE INCH ON ORIGINAL DRAWING.
0 1"
IF NOT ONE INCH ON THIS SHEET, ADJUST SCALES ACCORDINGLY.

CITY OF WENATCHEE, WASHINGTON
WASTEWATER TREATMENT PLANT IMPROVEMENTS

INSTRUMENTATION AND CONTROL
SLUDGE CONTROL PANEL SCHEDULES

DWG NO. 300-N-19
DATE NOV. 1990
PROJ. NO. SEA24579.N1

DATE: 11-6-90
DRAWN BY: G. SLAYTER DESIGNED BY: G. CONLEY
DGN NAME: 0:/PROJ2/WENATCHE/WE300N-T.DGN

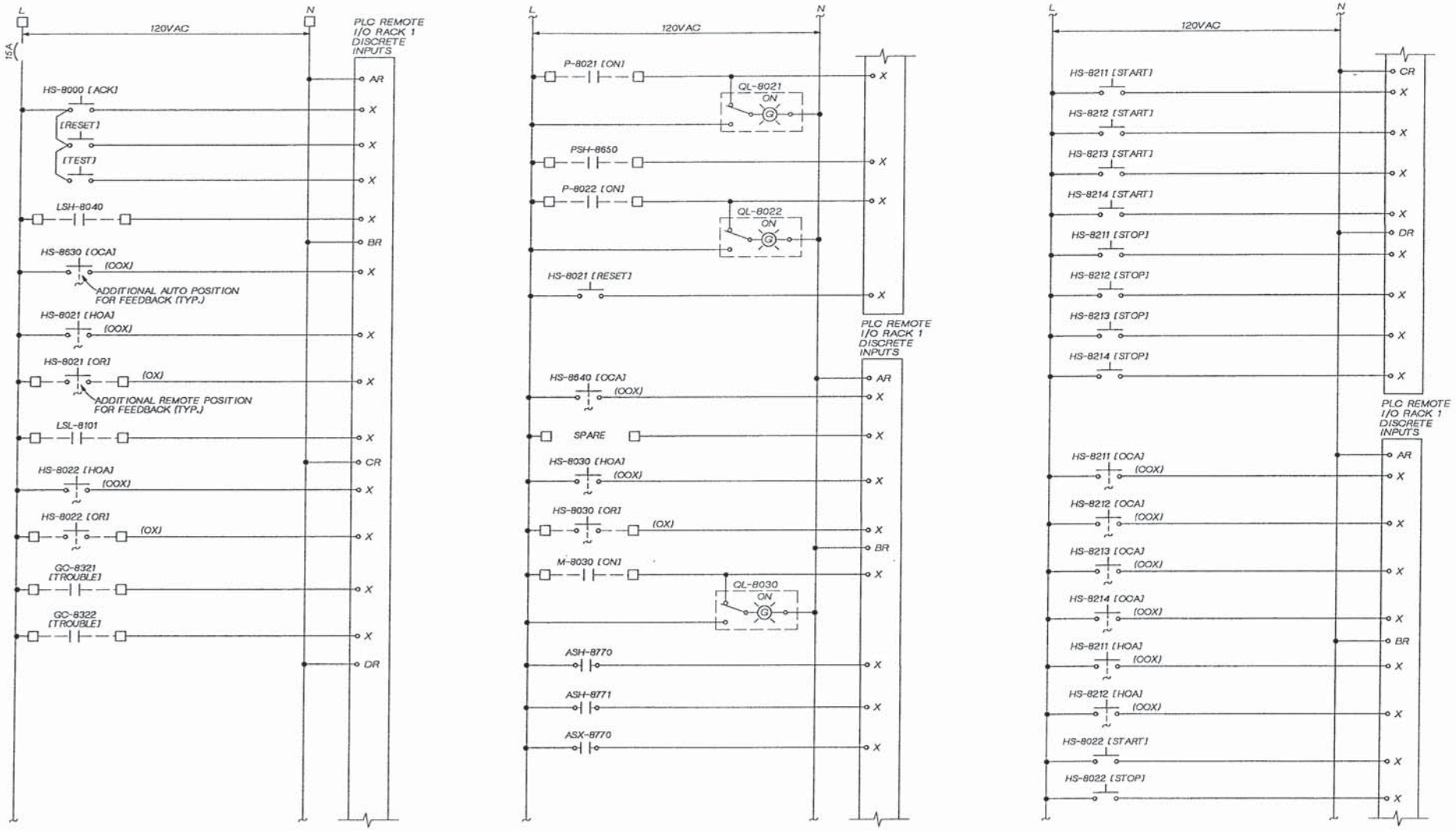

KAREN A. HOOD
STATE OF WASHINGTON
REGISTERED
PROFESSIONAL ENGINEER

CH2M HILL

DSGN	G. CONLEY
DR	G. SLAYTER
CHK	R BAKER
APVD	K HOOD

NO.	DATE	REVISION	BY	APVD

REUSE OF DOCUMENTS
THIS DOCUMENT, AND THE IDEAS AND DESIGNS INCORPORATED HEREIN, AS AN INSTRUMENT OF PROFESSIONAL SERVICE, IS THE PROPERTY OF CH2M HILL AND IS NOT TO BE USED, IN WHOLE OR IN PART, FOR ANY OTHER PROJECT WITHOUT THE WRITTEN AUTHORIZATION OF CH2M HILL.
©CH2M HILL

BAR IS ONE INCH ON ORIGINAL DRAWING.
0 1"
IF NOT ONE INCH ON THIS SHEET, ADJUST SCALES ACCORDINGLY.

CITY OF WENATCHEE, WASHINGTON
WASTEWATER TREATMENT PLANT IMPROVEMENTS

INSTRUMENTATION AND CONTROL
SLUDGE CONTROL PANEL
ELEMENTARY DIAGRAM

OWG NO. 300-N-20
DATE NOV. 1990
PROJ NO. SEA24579.N1

DATE: 11-6-90 DLC
DRAWN BY: G. SLAYTER DESIGNED BY: G. CONLEY
DGN NAME: O:/PROJ2/WENATCHE/WE300N-U.DGN

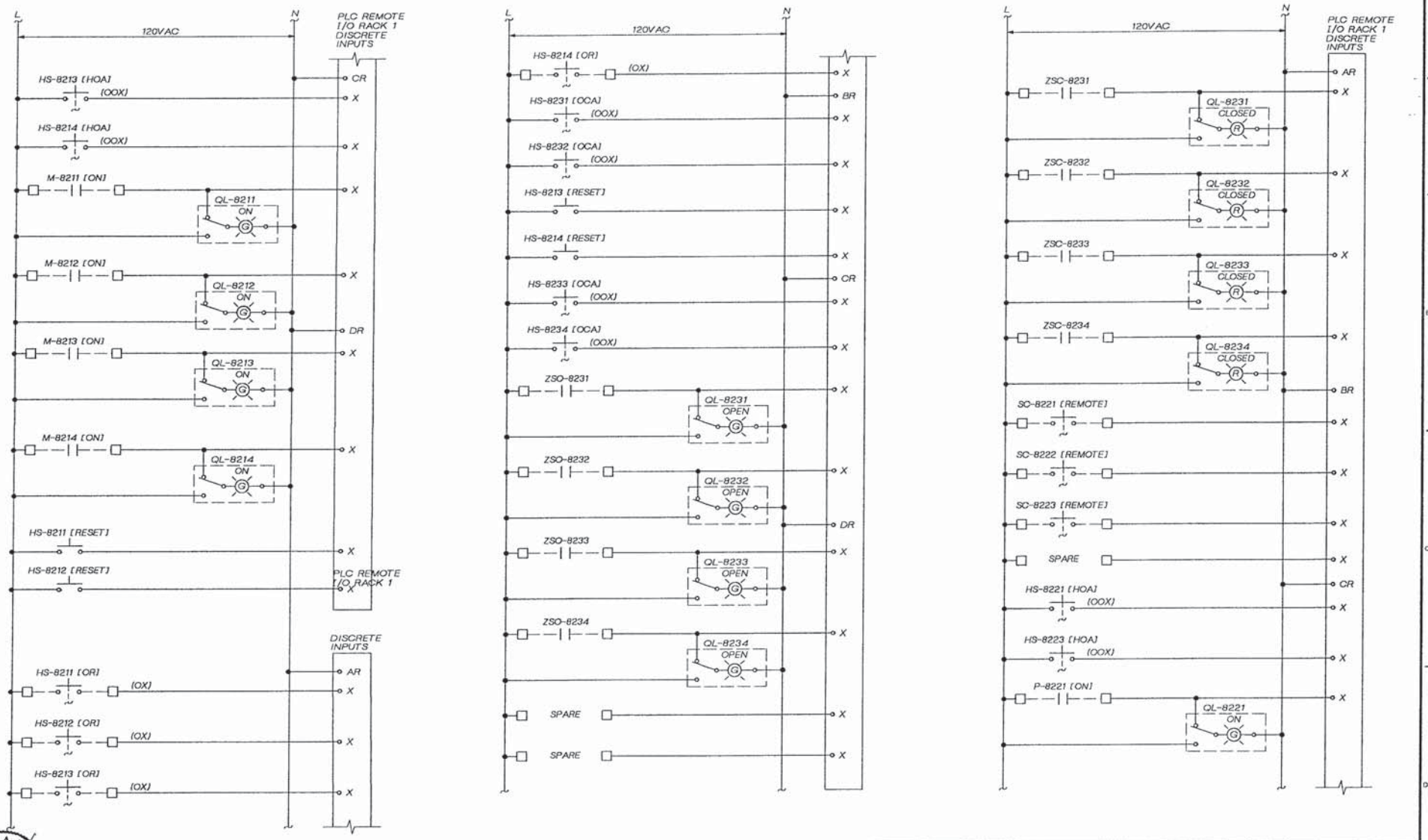

DSGN G. CONLEY					
DR G. SLAYTER					
CHK R BAKER					
APVD K HOOD	NO.	DATE	REVISION	BY	APVD

REUSE OF DOCUMENTS
THIS DOCUMENT, AND THE IDEAS AND DESIGNS INCORPORATED HEREIN, AS AN INSTRUMENT OF PROFESSIONAL SERVICE, IS THE PROPERTY OF CH2M HILL AND IS NOT TO BE USED, IN WHOLE OR IN PART, FOR ANY OTHER PROJECT WITHOUT THE WRITTEN AUTHORIZATION OF CH2M HILL.
©CH2M HILL

BAR IS ONE INCH ON ORIGINAL DRAWING. 0 1"
IF NOT ONE INCH ON THIS SHEET, ADJUST SCALES ACCORDINGLY.

CITY OF WENATCHEE, WASHINGTON
WASTEWATER TREATMENT PLANT IMPROVEMENTS

INSTRUMENTATION AND CONTROL
SLUDGE CONTROL PANEL
ELEMENTARY DIAGRAM

DWG NO. 300-N-21
DATE NOV. 1990
PROJ NO. SEA24579.N1

DATE: 11-6-90
DRAWN BY: G. SLAYTER DESIGNED BY: G. CONLEY
DGN NAME: G:/PROJ2/WENATCHE/WE300N-V.DGN

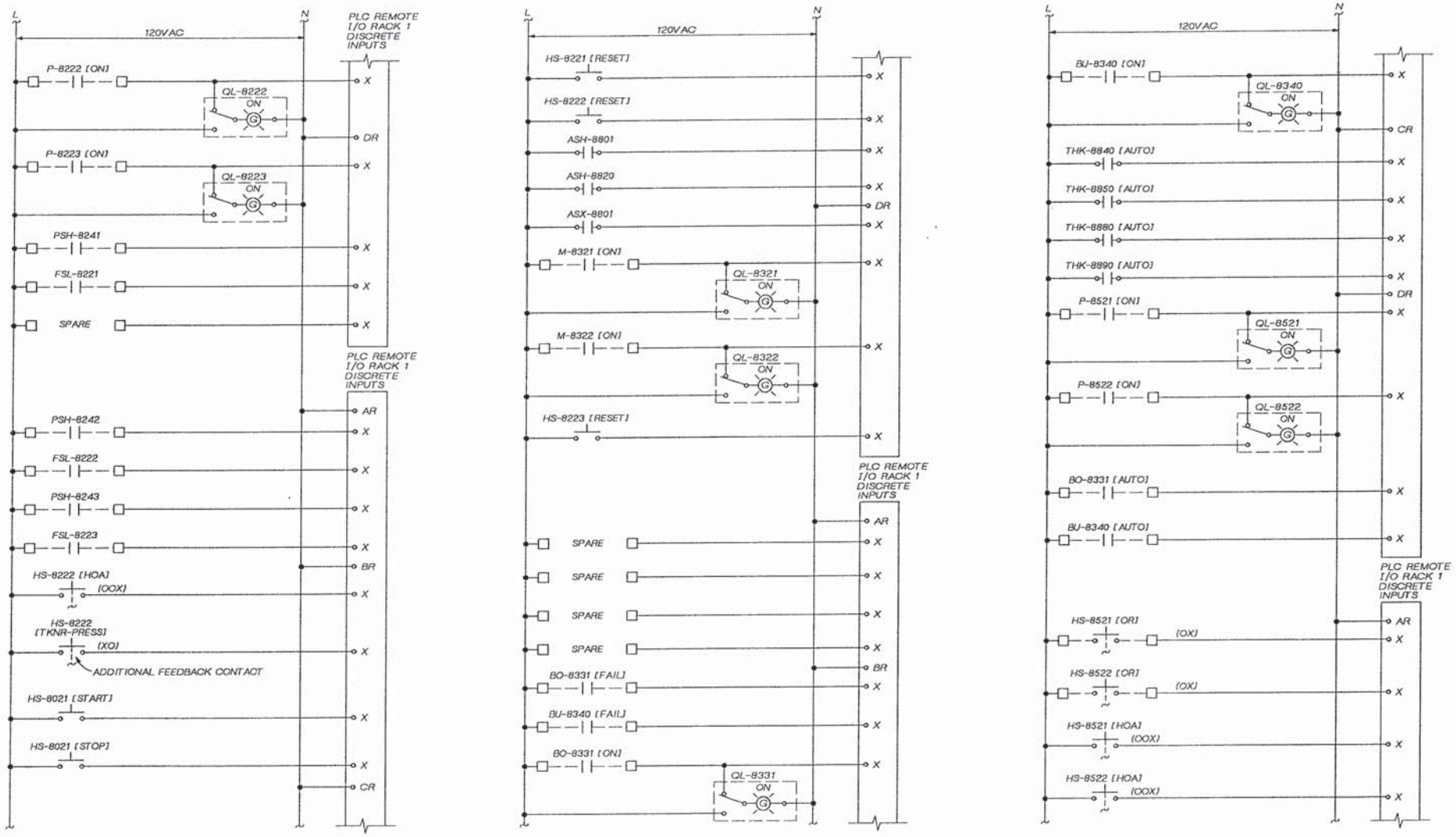

DSGN	G. CONLEY				
DR	G. SLAYTER				
CHK	R BAKER				
APVD	K HOOD	NO.	DATE	REVISION	BY	APVD

CH2M HILL

REUSE OF DOCUMENTS
THIS DOCUMENT, AND THE IDEAS AND DESIGNS INCORPORATED HEREIN, AS AN INSTRUMENT OF PROFESSIONAL SERVICE, IS THE PROPERTY OF CH2M HILL AND IS NOT TO BE USED, IN WHOLE OR IN PART, FOR ANY OTHER PROJECT WITHOUT THE WRITTEN AUTHORIZATION OF CH2M HILL.
©CH2M HILL

BAR IS ONE INCH ON ORIGINAL DRAWING. 0 1"
IF NOT ONE INCH ON THIS SHEET, ADJUST SCALES ACCORDINGLY.

CITY OF WENATCHEE, WASHINGTON
WASTEWATER TREATMENT PLANT IMPROVEMENTS

INSTRUMENTATION AND CONTROL
SLUDGE CONTROL PANEL
ELEMENTARY DIAGRAM

DWG NO. 300-N-22
DATE NOV. 1990
PROJ. NO. SEA24579.N1

DATE: 11-6-90
DRAWN BY: G. SLAYTER DESIGNED BY: G. CONLEY
DGN NAME: G:/PROJ2/WENATCHE/WE300N-W.DGN

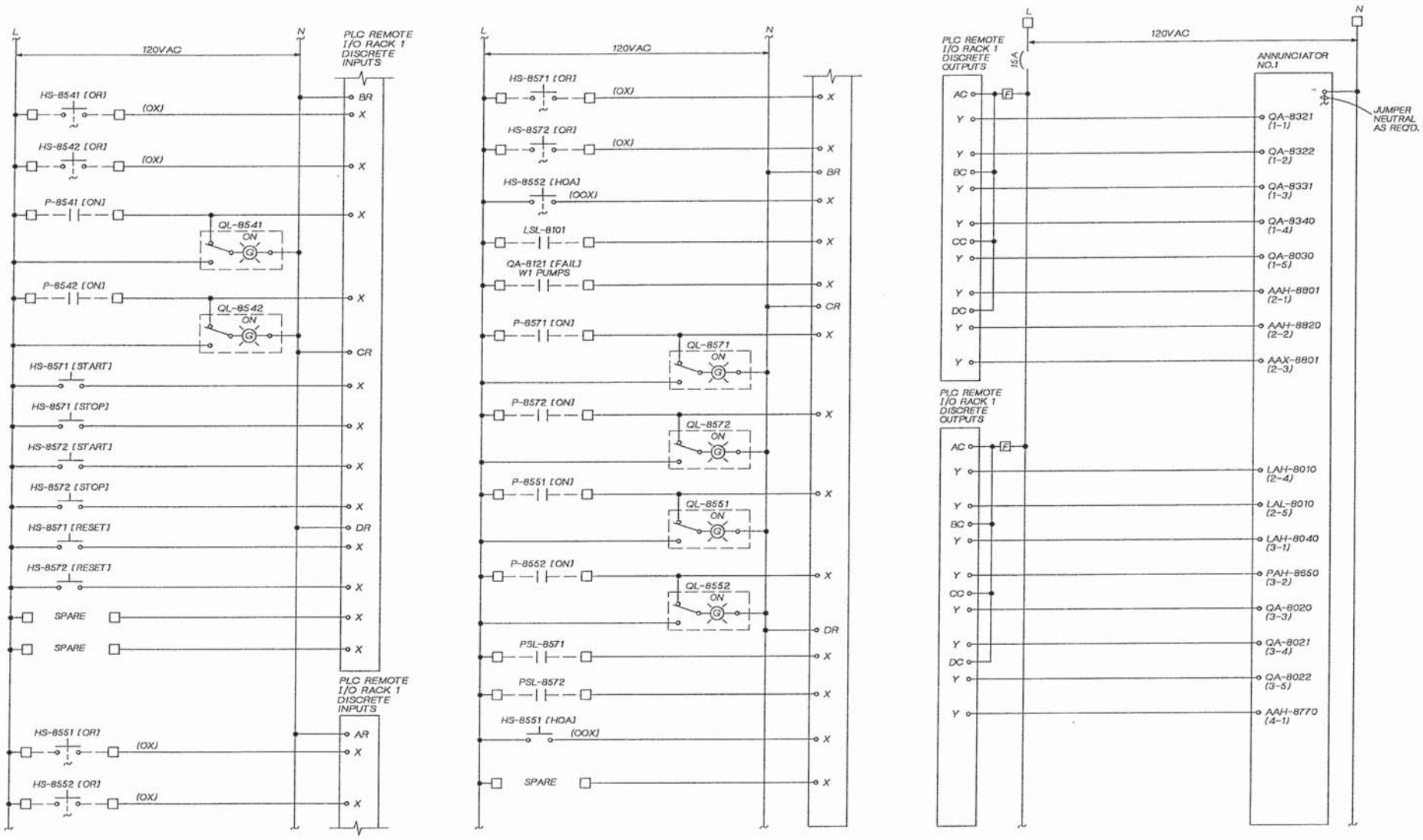

KAREN A. HOOD REGISTERED PROFESSIONAL ENGINEER

CH2M HILL

DSGN	G. CONLEY				
DR	G. SLAYTER				
CHK	R. BAKER				
APVD	K. HOOD	NO.	DATE	REVISION	BY	APVD

REUSE OF DOCUMENTS
THIS DOCUMENT, AND THE IDEAS AND DESIGNS INCORPORATED HEREIN, AS AN INSTRUMENT OF PROFESSIONAL SERVICE, IS THE PROPERTY OF CH2M HILL AND IS NOT TO BE USED, IN WHOLE OR IN PART, FOR ANY OTHER PROJECT WITHOUT THE WRITTEN AUTHORIZATION OF CH2M HILL.
©CH2M HILL

BAR IS ONE INCH ON ORIGINAL DRAWING.
0 1"
IF NOT ONE INCH ON THIS SHEET, ADJUST SCALES ACCORDINGLY.

CITY OF WENATCHEE, WASHINGTON
WASTEWATER TREATMENT PLANT IMPROVEMENTS

INSTRUMENTATION AND CONTROL
SLUDGE CONTROL PANEL
ELEMENTARY DIAGRAM

DWG NO. 300-N-23
DATE NOV. 1990
PROJ. NO. SEA24579.N1

DATE: 11-6-90 DLC
DRAWN BY: G. SLAYTER DESIGNED BY: G. CONLEY
DGN NAME: 0:/PROJ2/WENATCHE/WE300N-X.DGN

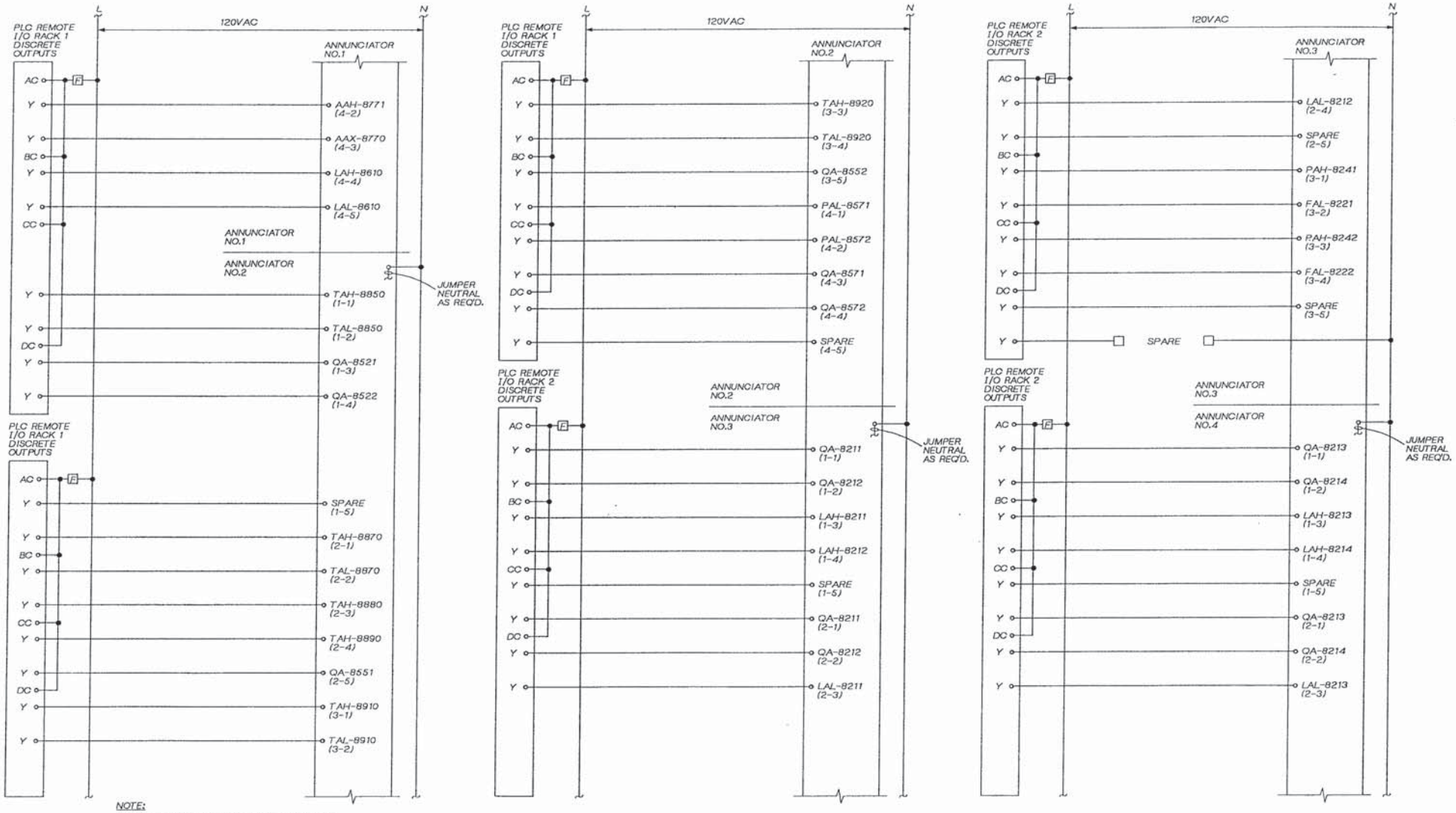

NOTE:
NOT ALL SPARE ANNUCIATOR POINTS ARE SHOWN. SEE DWG 300-N-19 FOR COMPLETE LIST OF SPARE ANNUNCIATOR POINTS.

KAREN A. HOOD REGISTERED PROFESSIONAL ENGINEER

CH2M HILL

DSGN	G. CONLEY
DR	G. SLAYTER
CHK	R BAKER
APVD	K HOOD

NO.	DATE	REVISION	BY	APVD

REUSE OF DOCUMENTS
THIS DOCUMENT, AND THE IDEAS AND DESIGNS INCORPORATED HEREIN, AS AN INSTRUMENT OF PROFESSIONAL SERVICE, IS THE PROPERTY OF CH2M HILL AND IS NOT TO BE USED, IN WHOLE OR IN PART, FOR ANY OTHER PROJECT WITHOUT THE WRITTEN AUTHORIZATION OF CH2M HILL.
©CH2M HILL

BAR IS ONE INCH ON ORIGINAL DRAWING. 0 1"
IF NOT ONE INCH ON THIS SHEET, ADJUST SCALES ACCORDINGLY.

CITY OF WENATCHEE, WASHINGTON
WASTEWATER TREATMENT PLANT IMPROVEMENTS

INSTRUMENTATION AND CONTROL
SLUDGE CONTROL PANEL
ELEMENTARY DIAGRAM

DWG NO. 300-N-24
DATE NOV. 1990
PROJ. NO. SEA24579.N1

DATE: 11-4-90 DLC
DRAWN BY: G. SLAYTER DESIGNED BY: G. CONLEY
DGN NAME: O:/PROJ2/WENATCHE/WE300N-Y.DGN

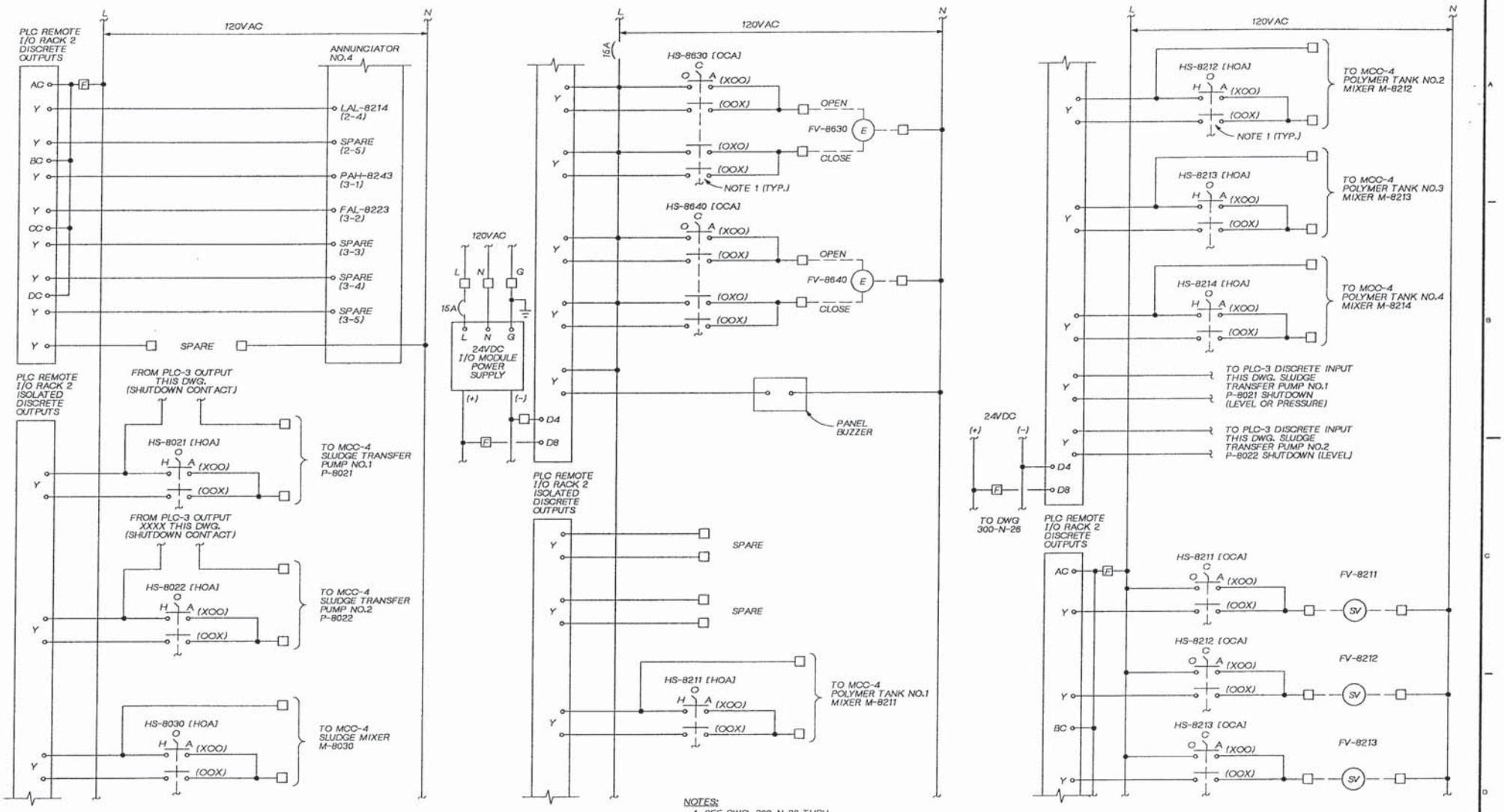

NOTES:
1. SEE DWG. 300-N-20 THRU 300-N-23 FOR ADDITIONAL SWITCH REQUIREMENTS.

KAREN A. HOOD — STATE OF WASHINGTON — REGISTERED PROFESSIONAL ENGINEER

CH2M HILL

DSGN	G. CONLEY
DR	G. SLAYTER
CHK	R BAKER
APVD	K HOOD

NO.	DATE	REVISION	BY	APVD

REUSE OF DOCUMENTS
THIS DOCUMENT, AND THE IDEAS AND DESIGNS INCORPORATED HEREIN, AS AN INSTRUMENT OF PROFESSIONAL SERVICE, IS THE PROPERTY OF CH2M HILL AND IS NOT TO BE USED, IN WHOLE OR IN PART, FOR ANY OTHER PROJECT WITHOUT THE WRITTEN AUTHORIZATION OF CH2M HILL.
©CH2M HILL

BAR IS ONE INCH ON ORIGINAL DRAWING. 0 1"
IF NOT ONE INCH ON THIS SHEET, ADJUST SCALES ACCORDINGLY.

CITY OF WENATCHEE, WASHINGTON
WASTEWATER TREATMENT PLANT IMPROVEMENTS

INSTRUMENTATION AND CONTROL
SLUDGE CONTROL PANEL
ELEMENTARY DIAGRAM

DWG NO. 300-N-25
DATE NOV. 1990
PROJ. NO. SEA24579.N1

DATE: 11-6-90
DRAWN BY: G. SLAYTER DESIGNED BY: G. CONLEY
DGN NAME: O:/PROJ2/WENATCHE/WE300N-Z.DGN

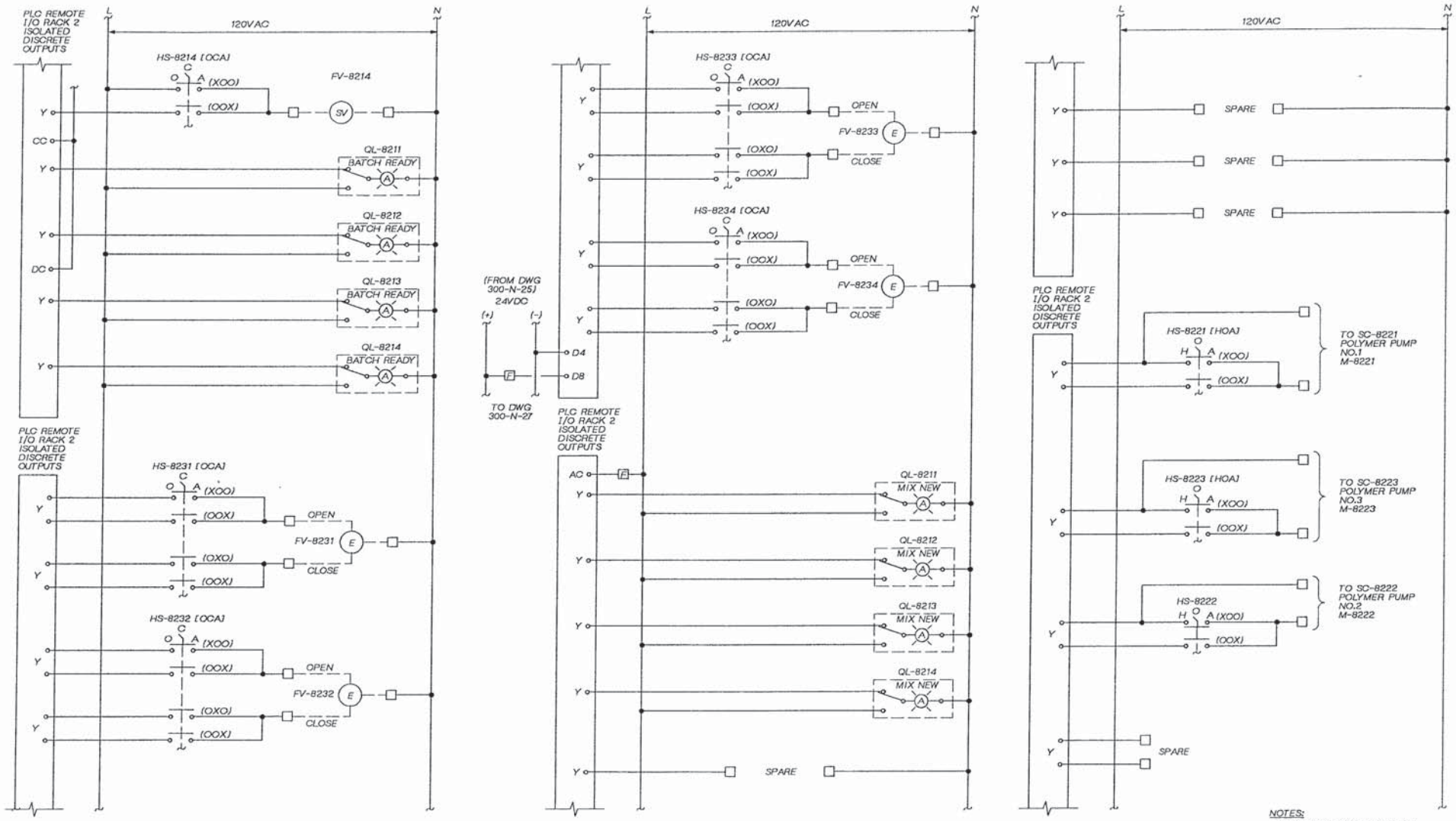

NOTES:
1. SEE DWG 300-N-20 THRU 300-N-23 FOR ADDITIONAL SWITCH REQUIREMENTS.

KAREN A. HOOD — STATE OF WASHINGTON — REGISTERED PROFESSIONAL ENGINEER

CH2M HILL

DSGN	G. CONLEY
DR	G. SLAYTER
CHK	R BAKER
APVD	K HOOD

NO.	DATE	REVISION	BY	APVD

REUSE OF DOCUMENTS
THIS DOCUMENT, AND THE IDEAS AND DESIGNS INCORPORATED HEREIN, AS AN INSTRUMENT OF PROFESSIONAL SERVICE, IS THE PROPERTY OF CH2M HILL AND IS NOT TO BE USED, IN WHOLE OR IN PART, FOR ANY OTHER PROJECT WITHOUT THE WRITTEN AUTHORIZATION OF CH2M HILL.
©CH2M HILL

BAR IS ONE INCH ON ORIGINAL DRAWING. 0 1"
IF NOT ONE INCH ON THIS SHEET, ADJUST SCALES ACCORDINGLY.

CITY OF WENATCHEE, WASHINGTON
WASTEWATER TREATMENT PLANT IMPROVEMENTS

INSTRUMENTATION AND CONTROL
SLUDGE CONTROL PANEL
ELEMENTARY DIAGRAM

DWG NO. 300-N-26
DATE NOV. 1990
PROJ. NO. SEA24579.N1

DATE: 11-6-90
DRAWN BY: G. SLAYTER DESIGNED BY: G. CONLEY
DGN NAME: 0:/PROJ2/WENATCHE/WE300NAA.DGN

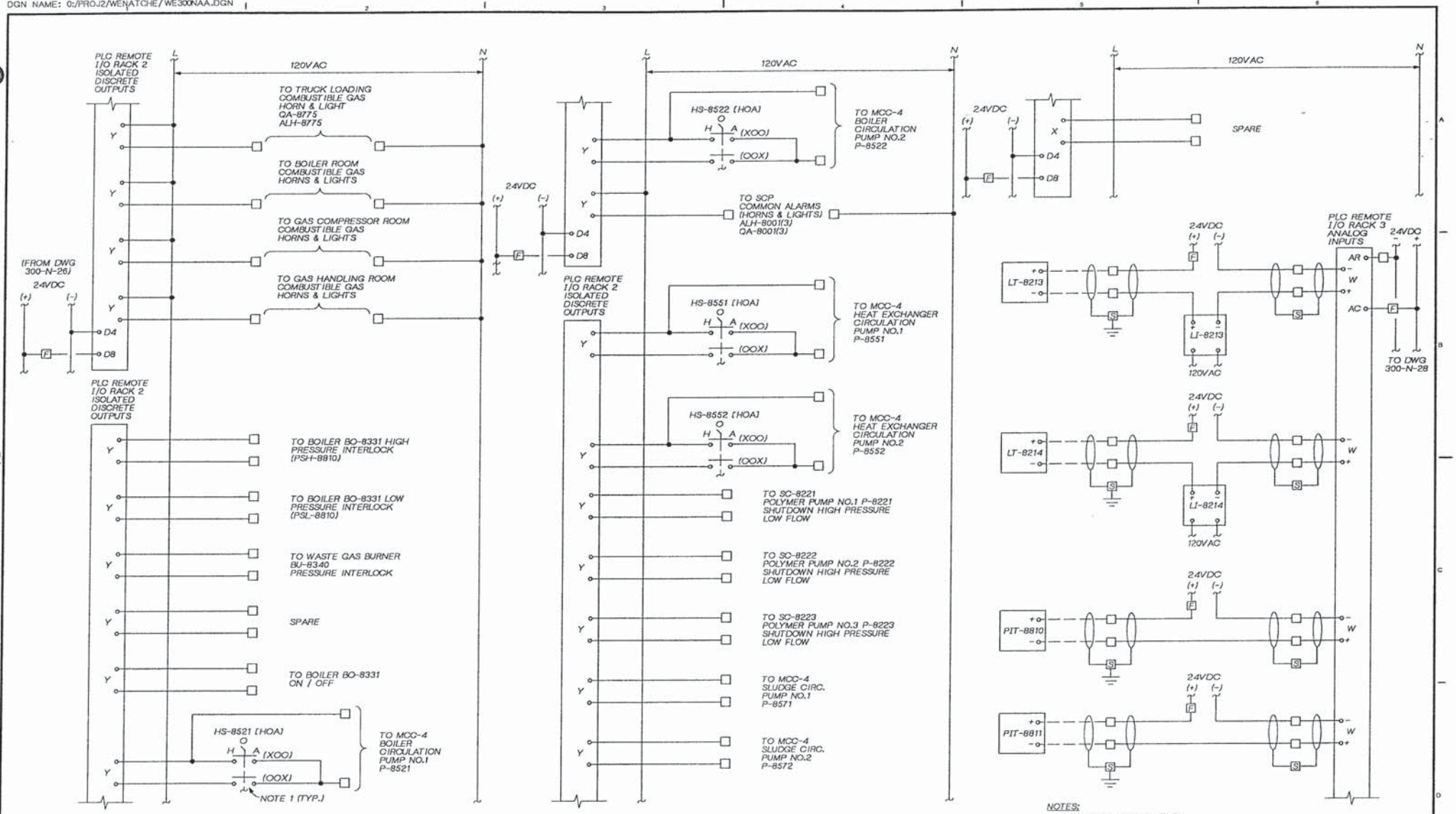

NOTES:
1. SEE DWG 300-N-20 THRU 300-N-23 FOR ADDITIONAL SWITCH REQUIREMENTS.

DSGN G. CONLEY					
DR G. SLAYTER					
CHK R BAKER					
APVD K HOOD	NO.	DATE	REVISION	BY	APVD

CH2M HILL

REUSE OF DOCUMENTS
THIS DOCUMENT, AND THE IDEAS AND DESIGNS INCORPORATED HEREIN, AS AN INSTRUMENT OF PROFESSIONAL SERVICE, IS THE PROPERTY OF CH2M HILL AND IS NOT TO BE USED, IN WHOLE OR IN PART, FOR ANY OTHER PROJECT WITHOUT THE WRITTEN AUTHORIZATION OF CH2M HILL.
© CH2M HILL

BAR IS ONE INCH ON ORIGINAL DRAWING.
0 1"
IF NOT ONE INCH ON THIS SHEET, ADJUST SCALES ACCORDINGLY.

CITY OF WENATCHEE, WASHINGTON
WASTEWATER TREATMENT PLANT IMPROVEMENTS

INSTRUMENTATION AND CONTROL
SLUDGE CONTROL PANEL ELEMENTARY DIAGRAM

DWG NO. 300-N-27
DATE NOV. 1990
PROJ. NO. SEA24579.N1

DATE: 11-4-90 DLC
DRAWN BY: G. SLAYTER DESIGNED BY: G. CONLEY
DGN NAME: 0:/PROJ2/WENATCHE/WE300NAB.DGN

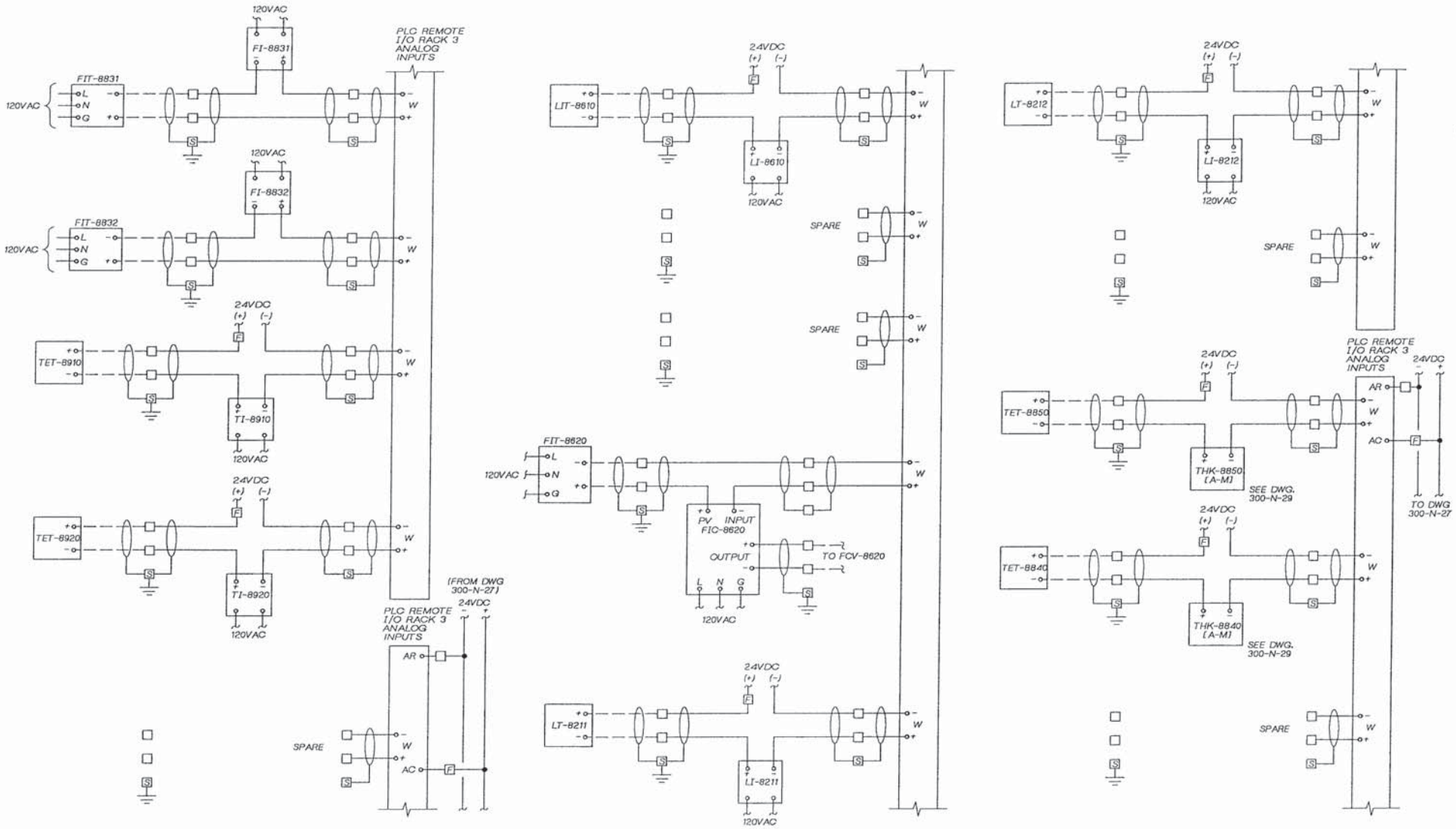

DSGN G. CONLEY					
DR G. SLAYTER					
CHK R. BAKER					
APVD K. HOOD	NO.	DATE	REVISION	BY	APVD

REUSE OF DOCUMENTS
THIS DOCUMENT, AND THE IDEAS AND DESIGNS INCORPORATED HEREIN, AS AN INSTRUMENT OF PROFESSIONAL SERVICE, IS THE PROPERTY OF CH2M HILL AND IS NOT TO BE USED, IN WHOLE OR IN PART, FOR ANY OTHER PROJECT WITHOUT THE WRITTEN AUTHORIZATION OF CH2M HILL.
©CH2M HILL

BAR IS ONE INCH ON ORIGINAL DRAWING. 0 1"
IF NOT ONE INCH ON THIS SHEET, ADJUST SCALES ACCORDINGLY.

CITY OF WENATCHEE, WASHINGTON
WASTEWATER TREATMENT PLANT IMPROVEMENTS

INSTRUMENTATION AND CONTROL
SLUDGE CONTROL PANEL
ELEMENTARY DIAGRAM

DWG NO. 300-N-28
DATE NOV. 1990
PROJ NO. SEA24579.N1

DATE: 11-4-90 DLC
DRAWN BY: G. SLAYTER DESIGNED BY: G. CONLEY
DGN NAME: 0:/PROJ2/WENATCHE/WE300NAC.DGN

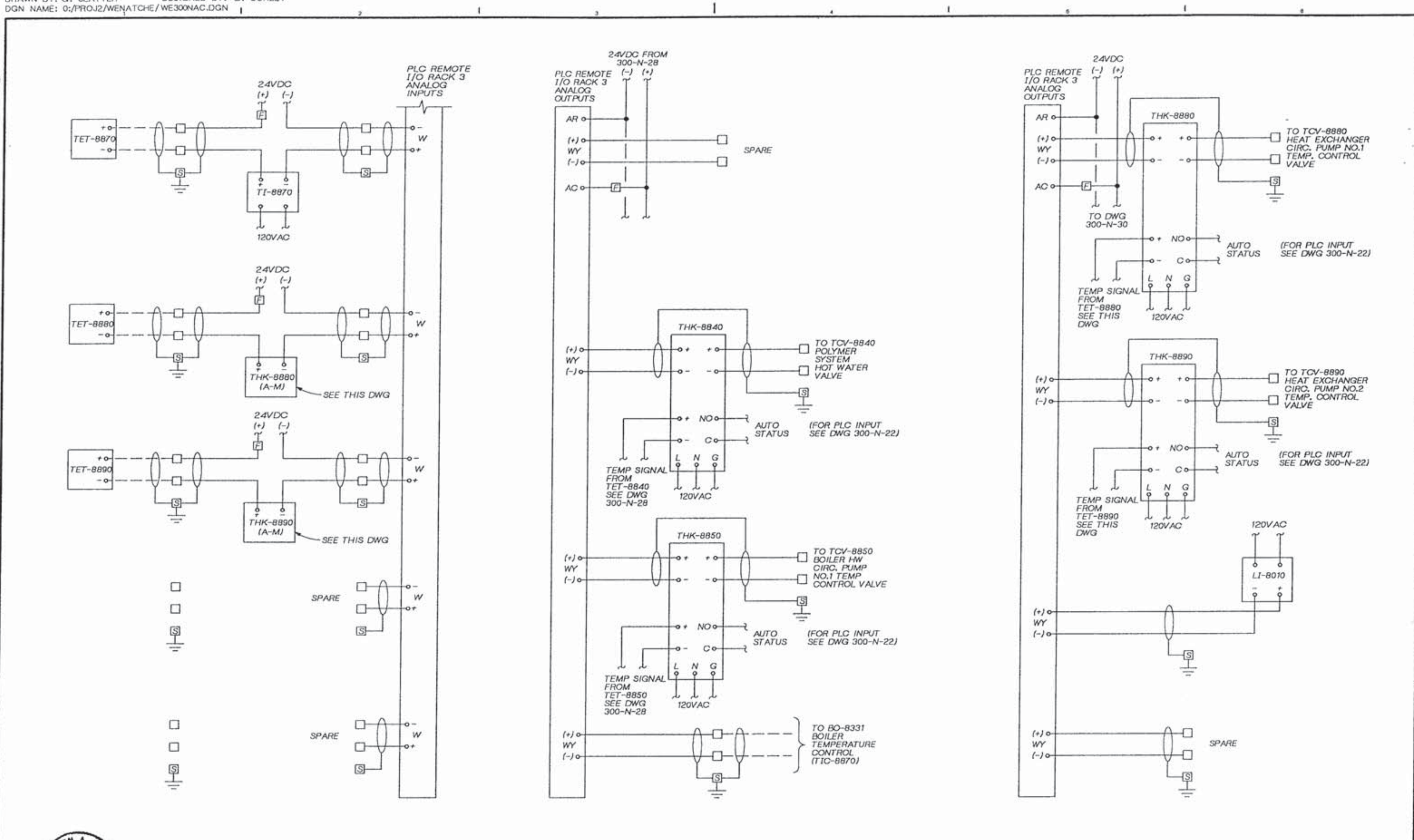

DSGN	G. CONLEY					
DR	G. SLAYTER					
CHK	R BAKER					
APVD	K HOOD	NO.	DATE	REVISION	BY	APVD

CH2M HILL

REUSE OF DOCUMENTS
THIS DOCUMENT, AND THE IDEAS AND DESIGNS INCORPORATED HEREIN, AS AN INSTRUMENT OF PROFESSIONAL SERVICE, IS THE PROPERTY OF CH2M HILL AND IS NOT TO BE USED, IN WHOLE OR IN PART, FOR ANY OTHER PROJECT WITHOUT THE WRITTEN AUTHORIZATION OF CH2M HILL.
©CH2M HILL

BAR IS ONE INCH ON ORIGINAL DRAWING.
IF NOT ONE INCH ON THIS SHEET, ADJUST SCALES ACCORDINGLY.

CITY OF WENATCHEE, WASHINGTON
WASTEWATER TREATMENT PLANT IMPROVEMENTS

INSTRUMENTATION AND CONTROL
SLUDGE CONTROL PANEL ELEMENTARY DIAGRAM

DWG NO. 300-N-29
DATE NOV. 1990
PROJ NO. SEA24579.N1

DATE: 11-4-90 DLC
DRAWN BY: G. SLAYTER DESIGNED BY: G. CONLEY
DGN NAME: O:/PROJ2/WENATCHE/WE300NAD.DGN

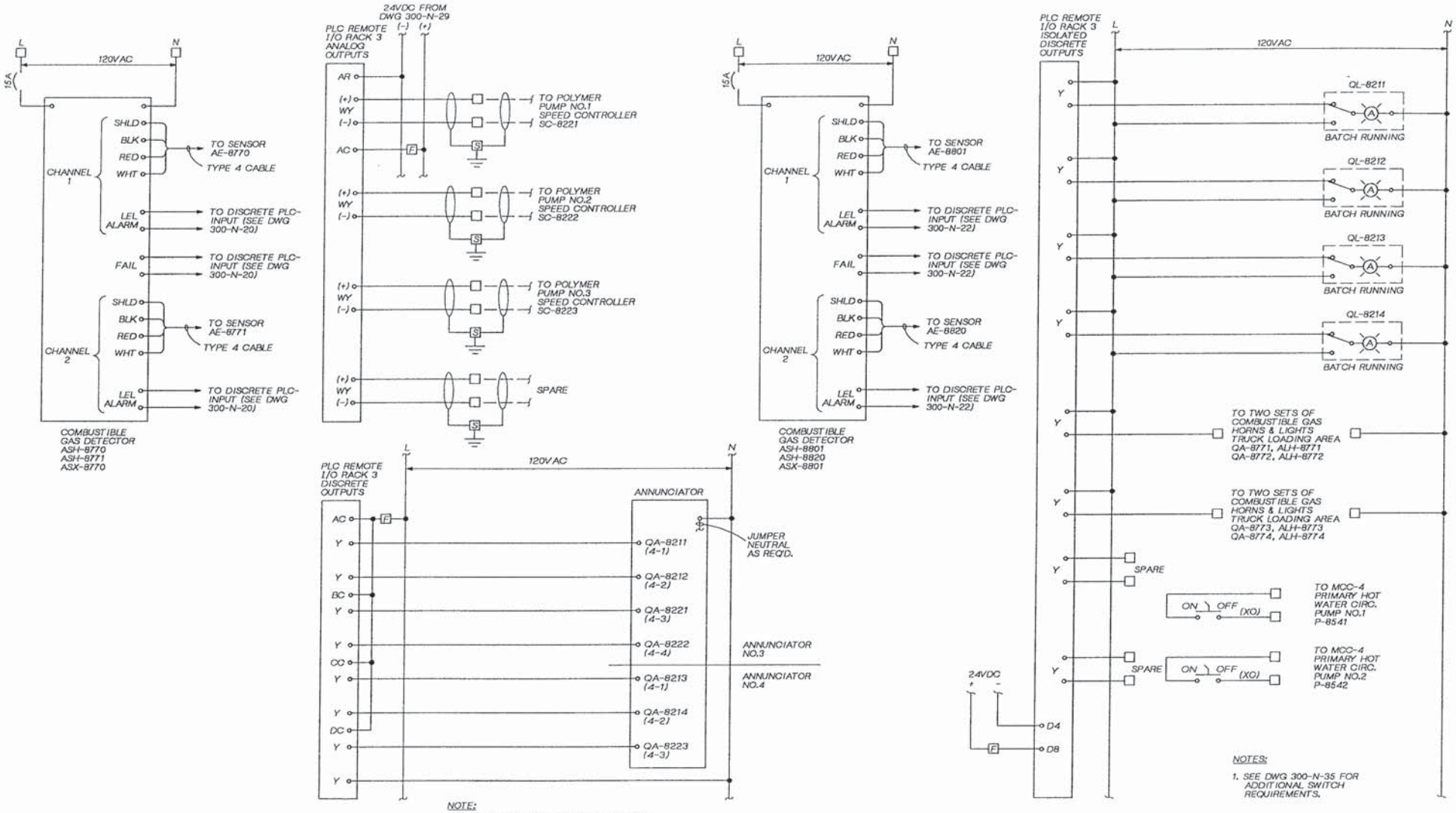

NOTE:
NOT ALL ANNUNCIATOR POINTS SHOWN. SEE DWG 300-N-19 FOR COMPLETE LIST OF ANNUNCIATOR POINTS.

NOTES:
1. SEE DWG 300-N-35 FOR ADDITIONAL SWITCH REQUIREMENTS.

KAREN A. HOOD STATE OF WASHINGTON REGISTERED PROFESSIONAL ENGINEER

CH2M HILL

DSGN	G. CONLEY
DR	G. SLAYTER
CHK	R. BAKER
APVD	K. HOOD

NO.	DATE	REVISION	BY	APVD

REUSE OF DOCUMENTS
THIS DOCUMENT, AND THE IDEAS AND DESIGNS INCORPORATED HEREIN, AS AN INSTRUMENT OF PROFESSIONAL SERVICE, IS THE PROPERTY OF CH2M HILL AND IS NOT TO BE USED, IN WHOLE OR IN PART, FOR ANY OTHER PROJECT WITHOUT THE WRITTEN AUTHORIZATION OF CH2M HILL.
©CH2M HILL

BAR IS ONE INCH ON ORIGINAL DRAWING. 0 1" IF NOT ONE INCH ON THIS SHEET, ADJUST SCALES ACCORDINGLY.

CITY OF WENATCHEE, WASHINGTON
WASTEWATER TREATMENT PLANT IMPROVEMENTS

INSTRUMENTATION AND CONTROL
SLUDGE CONTROL PANEL ELEMENTARY DIAGRAM

DWG NO. 300-N-30
DATE NOV. 1990
PROJ. NO. SEA24579.N1

DATE: 11-4-90 DLC
DRAWN BY: G. SLAYTER DESIGNED BY: G. CONLEY
DGN NAME: O:/PROJ2/WENATCHE/WE300NAE.DGN

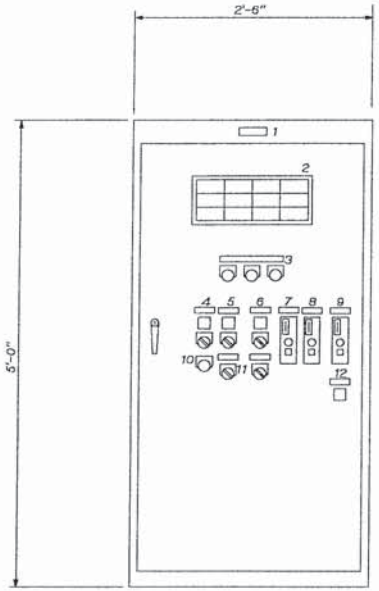

LP-8080 PANEL ELEVATION

(GRAVITY BELT THICKENER AUXILARY PANEL)
1½" = 1'-0"

NOTES:

1. PANEL ENCLOSURE SHALL BE 2'-0" DEEP. ALL DIMENSIONS ARE NOMINAL.
2. SECURE ENCLOSURE TO WALL WITH ⅜" SST CONCRETE ANCHORS.
3. PANEL SHALL BE RATED NEMA 4X.
4. FOR PANEL LOCATION SEE DWG NO. 400-E-15.

CONTROL PANEL SCHEDULE

ITEM NO.	TAG NO.	NAMEPLATE INSCRIPTION (DESCRIPTION) FIRST LINE / SECOND LINE / THIRD LINE	SPEC NO.
1	LP-8080	GRAVITY BELT / THICKENER / AUX PANEL	-
2	(SEE SCHEDULE)	(ANNUNCIATOR)	N30
3	HS-8001	ALARM ANNUNCIATOR [ACK, RESET, TEST]	M16
4	QL-8110 [ON]	THICKENED SLUDGE / PUMP / P-8110	M6
	HS-8110 [HOA]		M22
	HS-8110 [RESET]		M16
5	QL-8061 [ON]	WASHWATER / BOOSTER PUMP NO.1 / P-8061	M6
	HS-8061 [HOA]		M22
6	QL-7010 [ON]	WAS / PUMP NO. 1 / P-7010	M6
	HS-7010 [HOA]		M22
7	FIC-8660 [A-M]	WAS / FLOW / CONTROLLER	S6
8	SHK-8110 [A-M]	THICKENED SLUDGE / PUMP CONTROL / SC-8110	S12
9	SHK-8221 [M]	POLYMER PUMP / NO.1 & NO.2 / SPEED CONTROL	S12
10	HS-8251 [OCA]	POLYMER SECONDARY / DILUTION / FV-8251	M22
11	HS-7010 [DAF/GBT]	WAS PUMP / SELECT	M22
12	QL-8227 [ON]	POLYMER PUMP / NO.1 / P-8221	M6

ANNUNCIATOR SCHEDULE

COL-ROW	TAG NO.	WINDOW INSCRIPTION FIRST LINE / SECOND LINE / THIRD LINE
1-1	PAH-8110	THICKENED SLUDGE / PUMP DISCHARGE / HIGH PRESSURE
1-2	FAL-8110	THICKENED SLUDGE / PUMP SUCTION / LOW FLOW
1-3	LAH-8670	GRAVITY BELT / DISCHARGE HOPPER / HIGH LEVEL
1-4	LAL-8670	GRAVITY BELT / DISCHARGE HOPPER / LOW LEVEL
2-1	QA-8080	GRAVITY BELT / THICKENER / TROUBLE
2-2	QA-8061	WASHWATER / BOOSTER PUMP NO.1 / FAIL
2-3	QA-7010	WAS / PUMP / FAIL
2-4	QA-8110	THICKENED SLUDGE / PUMP / FAIL
3-1	SPARE	
3-2	SPARE	
3-3	SPARE	
3-4	SPARE	

KAREN A. HOOD — STATE OF WASHINGTON — REGISTERED PROFESSIONAL ENGINEER

CH2M HILL

DSGN	G.CONLEY
DR	G. SLAYTER
CHK	R BAKER
APVD	K HOOD

NO.	DATE	REVISION	BY	APVD

REUSE OF DOCUMENTS
THIS DOCUMENT, AND THE IDEAS AND DESIGNS INCORPORATED HEREIN, AS AN INSTRUMENT OF PROFESSIONAL SERVICE, IS THE PROPERTY OF CH2M HILL AND IS NOT TO BE USED, IN WHOLE OR IN PART, FOR ANY OTHER PROJECT WITHOUT THE WRITTEN AUTHORIZATION OF CH2M HILL.
©CH2M HILL

BAR IS ONE INCH ON ORIGINAL DRAWING. 0 — 1" IF NOT ONE INCH ON THIS SHEET, ADJUST SCALES ACCORDINGLY.

CITY OF WENATCHEE, WASHINGTON
WASTEWATER TREATMENT PLANT IMPROVEMENTS

INSTRUMENTATION AND CONTROL
LP-8080
ELEVATION AND SCHEDULE

DWG NO. 300-N-31
DATE NOV. 1990
PROJ NO. SEA24579.N1

DATE: 11-4-90 DLC
DRAWN BY: G. SLAYTER DESIGNED BY: G. CONLEY
DGN NAME: O:/PROJ2/WENATCHE/WE300NAF.DGN

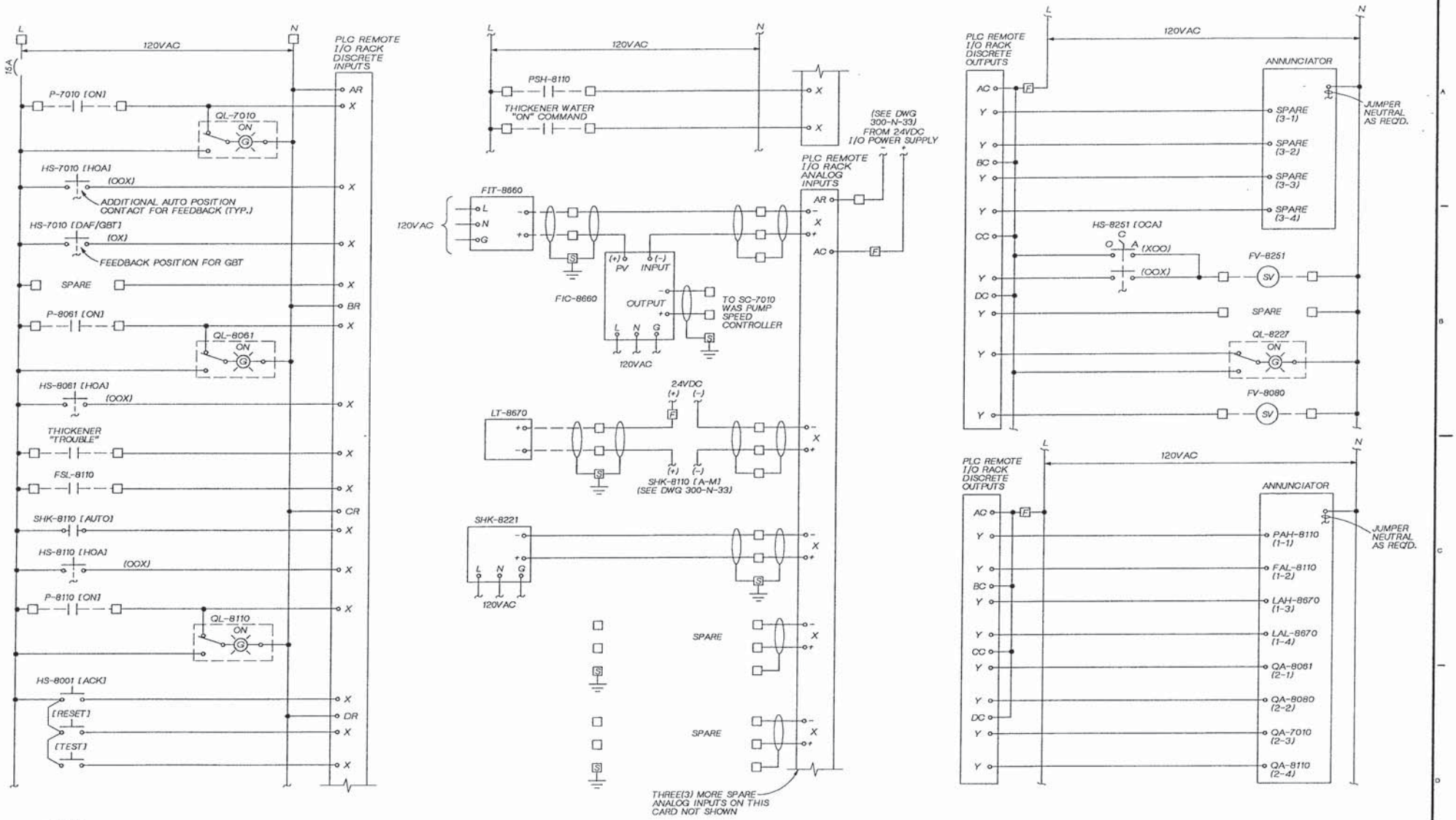

DSGN G. CONLEY					
DR G. SLAYTER					
CHK R BAKER					
APVD K HOOD	NO.	DATE	REVISION	BY	APVD

REUSE OF DOCUMENTS
THIS DOCUMENT, AND THE IDEAS AND DESIGNS INCORPORATED HEREIN, AS AN INSTRUMENT OF PROFESSIONAL SERVICE, IS THE PROPERTY OF CH2M HILL AND IS NOT TO BE USED, IN WHOLE OR IN PART, FOR ANY OTHER PROJECT WITHOUT THE WRITTEN AUTHORIZATION OF CH2M HILL.
©CH2M HILL

BAR IS ONE INCH ON ORIGINAL DRAWING. 0 1 2 3 4 5 6 7 8 9 10 11 12
IF NOT ONE INCH ON THIS SHEET, ADJUST SCALES ACCORDINGLY.

CITY OF WENATCHEE, WASHINGTON
WASTEWATER TREATMENT PLANT IMPROVEMENTS

INSTRUMENTATION AND CONTROL
LP-8080
ELEMENTARY DIAGRAM

DWG NO. 300-N-32
DATE NOV. 1990
PROJ NO. SEA24579.N1

DATE: 11-4-90 DLC
DRAWN BY: G. SLAYTER DESIGNED BY: G. CONLEY
DGN NAME: O:/PROJ2/WENATCHE/WE300NAG.DGN

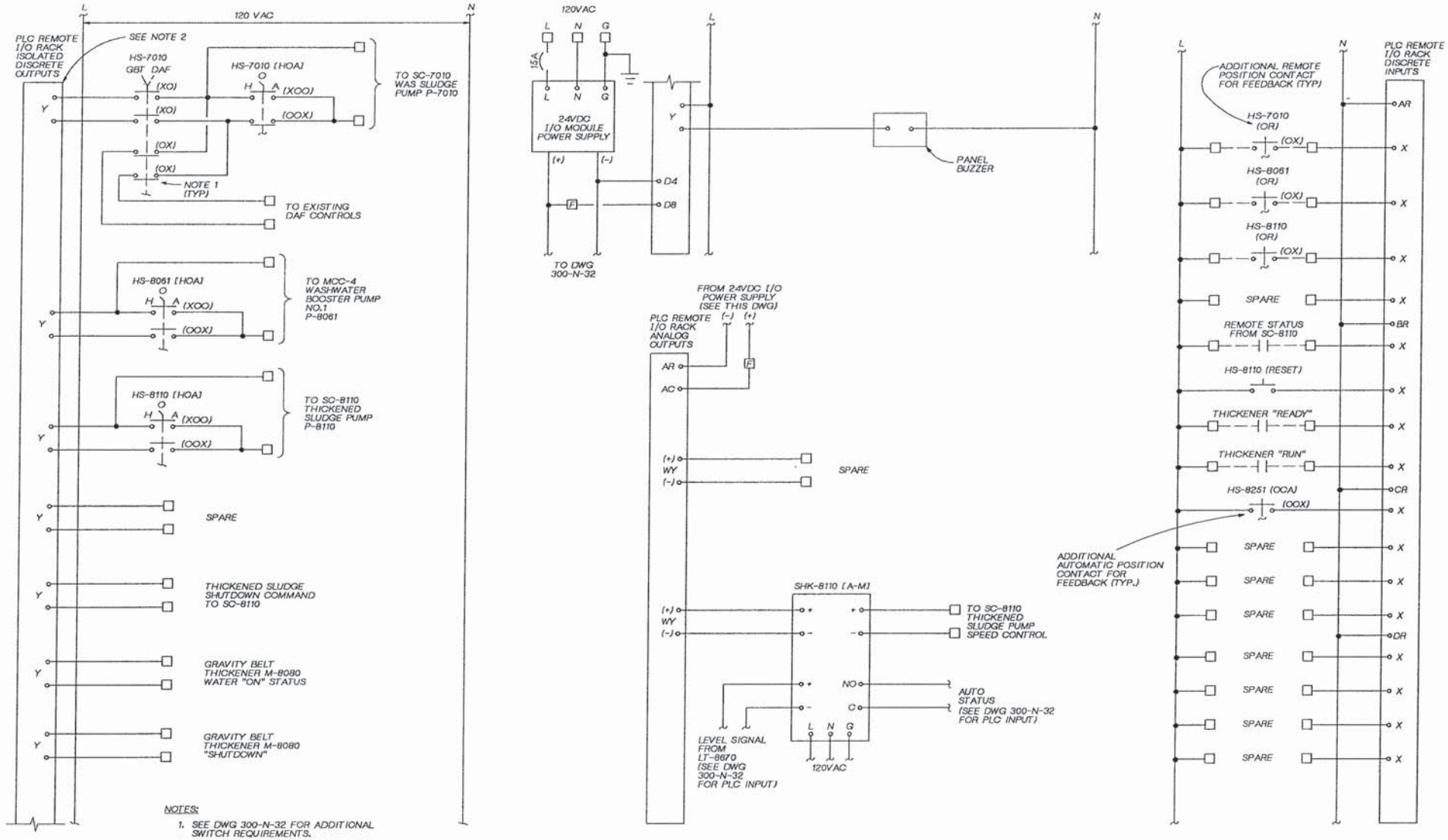

NOTES:

1. SEE DWG 300-N-32 FOR ADDITIONAL SWITCH REQUIREMENTS.
2. ADD ONE ADDITIONAL PLC REMOTE I/O RACK ISOLATED DISCRETE OUTPUT CARD FOR SPARES.

KAREN A. HOOD — STATE OF WASHINGTON — REGISTERED PROFESSIONAL ENGINEER

CH2M HILL

DSGN	G. CONLEY
DR	G. SLAYTER
CHK	R BAKER
APVD	K HOOD

NO.	DATE	REVISION	BY	APVD

REUSE OF DOCUMENTS

THIS DOCUMENT, AND THE IDEAS AND DESIGNS INCORPORATED HEREIN, AS AN INSTRUMENT OF PROFESSIONAL SERVICE, IS THE PROPERTY OF CH2M HILL AND IS NOT TO BE USED, IN WHOLE OR IN PART, FOR ANY OTHER PROJECT WITHOUT THE WRITTEN AUTHORIZATION OF CH2M HILL.

©CH2M HILL

BAR IS ONE INCH ON ORIGINAL DRAWING. 0 1"
IF NOT ONE INCH ON THIS SHEET, ADJUST SCALES ACCORDINGLY.

CITY OF WENATCHEE, WASHINGTON
WASTEWATER TREATMENT PLANT IMPROVEMENTS

INSTRUMENTATION AND CONTROL
LP-8080
ELEMENTARY DIAGRAM

DWG NO. 300-N-33
DATE NOV. 1990
PROJ. NO. SEA24579.N1

DATE: 11-4-90 DLC
DRAWN BY: G. SLAYTER DESIGNED BY: G. CONLEY
DGN NAME: 0:/PROJ2/WENATCHE/WE300NAH.DGN

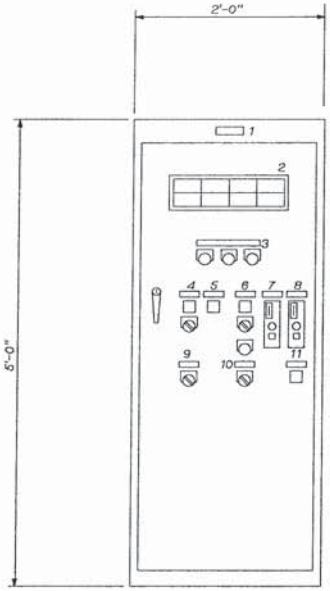

LP-8090 PANEL ELEVATION

1½" = 1'-0"
BELT FILTER PRESS AUXILARY PANEL

NOTES:
1. PANEL ENCLOSURE SHALL BE 2'-0" DEEP. ALL DIMENSIONS ARE NOMINAL.
2. SECURE ENCLOSURE TO WALL WITH ⅜" SST CONCRETE ANCHORS.
3. PANEL SHALL BE RATED NEMA 4X.
4. FOR PANEL LOCATION SEE DWG. NO. 400-E-15.

CONTROL PANEL SCHEDULE

ITEM NO.	TAG NO.	NAMEPLATE INSCRIPTION (DESCRIPTION) FIRST LINE / SECOND LINE / THIRD LINE	SPEC NO.
1	LP-8090	BELT / FILTER PRESS / AUX PANEL	-
2	(SEE SCHEDULE)	(ANNUNCIATOR)	N30
3	HS-8002	ALARM ANNUNCIATOR (ACK, RESET, TEST)	M16
4	QL-8062 (ON)	WASHWATER / BOOSTER PUMP NO.2 / P-8062	M6
	HS-8062 (HOA)		M22
5	QL-8070 (ON)	SLUDGE / GRINDER / M-8070	M6
6	QL-8050 (ON)	SLUDGE FEED / LOAD PUMP / P-8050	M6
	HS-8050 (HOA)		M22
	HS-8120 (RESET)		M16
7	FIC-8130	SLUDGE FEED / LOAD PUMP / FLOW CONTROL	S6
8	SHK-8223 (M)	POLYMER PUMP / NO. 2 & 3 / SPEED CONTROL	S12
9	HS-8252 (OCA)	POLYMER SECONDARY / DILUTION / FV-8252	M22
10	HS-8050 (GBT/BFP)	SLUDGE FEED / LOAD PUMP / SELECT	M22
11	QL-8228 (ON)	POLYMER PUMP / NO. 3 / P-8223	M6

ANNUNCIATOR SCHEDULE

COL-ROW	TAG NO.	WINDOW INSCRIPTION FIRST LINE / SECOND LINE / THIRD LINE
1-1	PAH-8120	SLUDGE FEED / LOAD PUMP / HI DISCH. PRESS.
1-2	FAL-8050	SLUDGE FEED / LOAD PUMP / LOW FLOW
1-3	QA-8062	WASHWATER / BOOSTER PUMP NO. 2 / FAIL
1-4	QA-8070	SLUDGE / GRINDER / FAIL
2-1	QA-8090	BELT FILTER / PRESS / TROUBLE
2-2	QA-8050	SLUDGE FEED / LOAD PUMP / FAIL
2-3	-	SPARE
2-4	-	SPARE

KAREN A. HOOD — STATE OF WASHINGTON — 23413 — REGISTERED PROFESSIONAL ENGINEER

CH2M HILL

DSGN	G.CONLEY
DR	G. SLAYTER
CHK	R BAKER
APVD	K HOOD

NO.	DATE	REVISION	BY	APVD

REUSE OF DOCUMENTS
THIS DOCUMENT, AND THE IDEAS AND DESIGNS INCORPORATED HEREIN, AS AN INSTRUMENT OF PROFESSIONAL SERVICE, IS THE PROPERTY OF CH2M HILL AND IS NOT TO BE USED, IN WHOLE OR IN PART, FOR ANY OTHER PROJECT WITHOUT THE WRITTEN AUTHORIZATION OF CH2M HILL.
©CH2M HILL

BAR IS ONE INCH ON ORIGINAL DRAWING.
0 1"
IF NOT ONE INCH ON THIS SHEET, ADJUST SCALES ACCORDINGLY.

CITY OF WENATCHEE, WASHINGTON
WASTEWATER TREATMENT PLANT IMPROVEMENTS

INSTRUMENTATION AND CONTROL
LP-8090
ELEVATION AND SCHEDULE

DWG NO. 300-N-34
DATE NOV. 1990
PROJ NO. SEA24579.N1

DATE: 11-6-90
DRAWN BY: G. SLAYTER DESIGNED BY: G. CONLEY
DGN NAME: O:/PROJ2/WENATCHE/WE300NAI.DGN

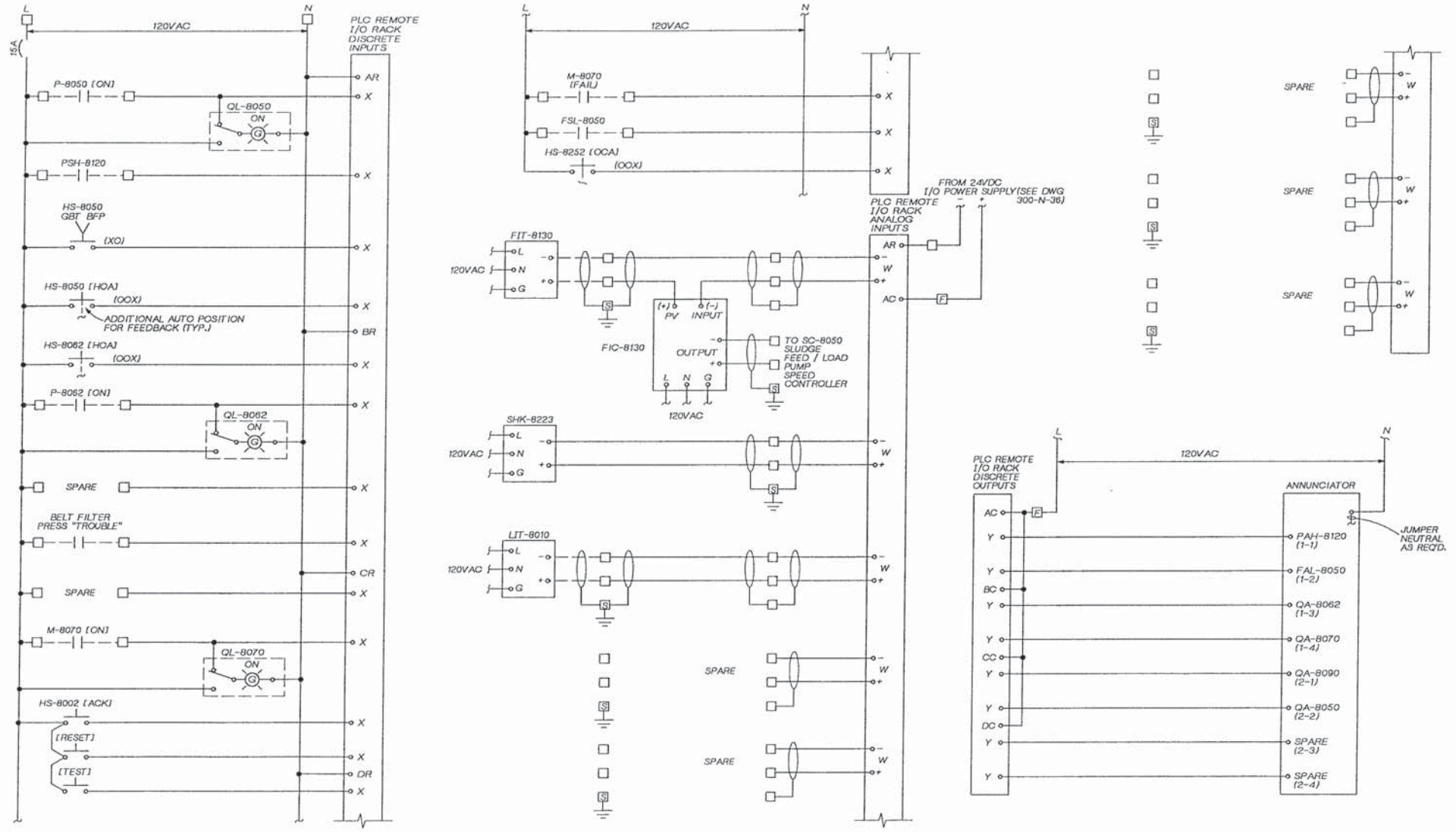

DSGN	G. CONLEY				
DR	G. SLAYTER				
CHK	R. BAKER				
APVD	K. HOOD	NO.	DATE	REVISION	BY / APVD

CH2M HILL

REUSE OF DOCUMENTS

THIS DOCUMENT, AND THE IDEAS AND DESIGNS INCORPORATED HEREIN, AS AN INSTRUMENT OF PROFESSIONAL SERVICE, IS THE PROPERTY OF CH2M HILL AND IS NOT TO BE USED, IN WHOLE OR IN PART, FOR ANY OTHER PROJECT WITHOUT THE WRITTEN AUTHORIZATION OF CH2M HILL.

©CH2M HILL

BAR IS ONE INCH ON ORIGINAL DRAWING. 0 1" IF NOT ONE INCH ON THIS SHEET, ADJUST SCALES ACCORDINGLY.

CITY OF WENATCHEE, WASHINGTON
WASTEWATER TREATMENT PLANT IMPROVEMENTS

INSTRUMENTATION AND CONTROL
LP-8090
ELEMENTARY DIAGRAM

DWG NO. 300-N-35
DATE NOV. 1990
PROJ. NO. SEA24579.N1

DATE: 11-6-90 DLC
DRAWN BY: G. SLAYTER DESIGNED BY: G. CONLEY
DGN NAME: 0:/PROJ2/WENATCHE/WE300NAJ.DGN

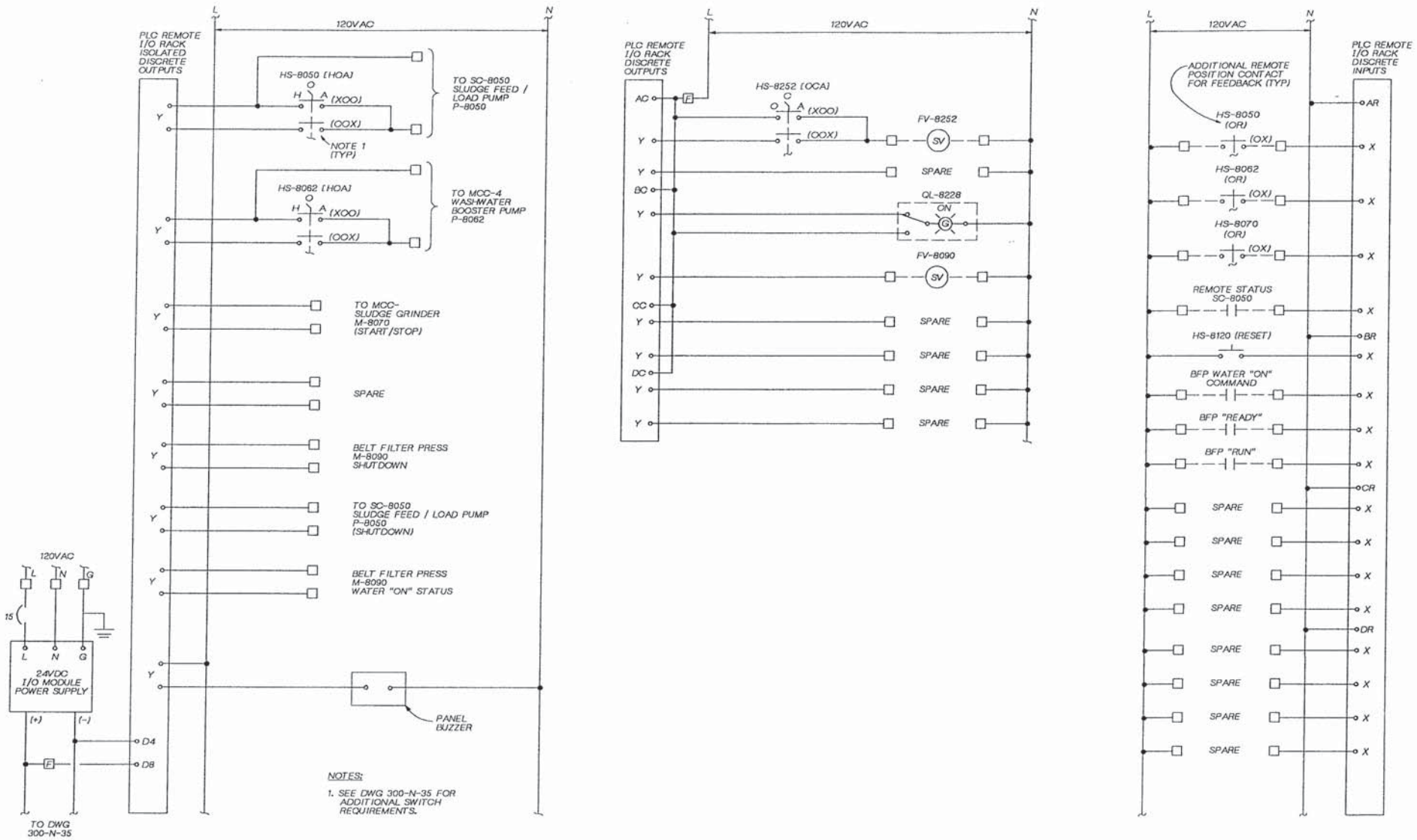

DSGN G. CONLEY						
DR G. SLAYTER						
CHK R BAKER						
APVD K HOOD	NO.	DATE	REVISION	BY	APVD	

CH2M HILL

REUSE OF DOCUMENTS
THIS DOCUMENT, AND THE IDEAS AND DESIGNS INCORPORATED HEREIN, AS AN INSTRUMENT OF PROFESSIONAL SERVICE, IS THE PROPERTY OF CH2M HILL AND IS NOT TO BE USED, IN WHOLE OR IN PART, FOR ANY OTHER PROJECT WITHOUT THE WRITTEN AUTHORIZATION OF CH2M HILL.
©CH2M HILL

BAR IS ONE INCH ON ORIGINAL DRAWING. 0 — 1"
IF NOT ONE INCH ON THIS SHEET, ADJUST SCALES ACCORDINGLY.

CITY OF WENATCHEE, WASHINGTON
WASTEWATER TREATMENT PLANT IMPROVEMENTS

INSTRUMENTATION AND CONTROL
LP-8090
ELEMENTARY DIAGRAM

DWG NO. 300-N-36
DATE NOV. 1990
PROJ NO. SEA24579.N1

DATE: 11-4-90
DRAWN BY: G. SLAYTER DESIGNED BY: G. CONLEY
DGN NAME: 0:/PROJ2/WENATCHE/WE300NAK.DGN

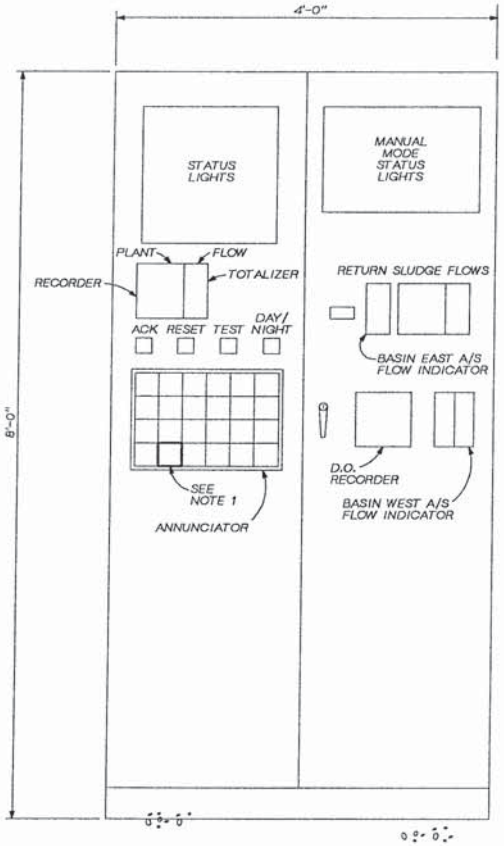

EXISTING POP PANEL ELEVATION FRONT VIEW

1 ½" = 1'-0"

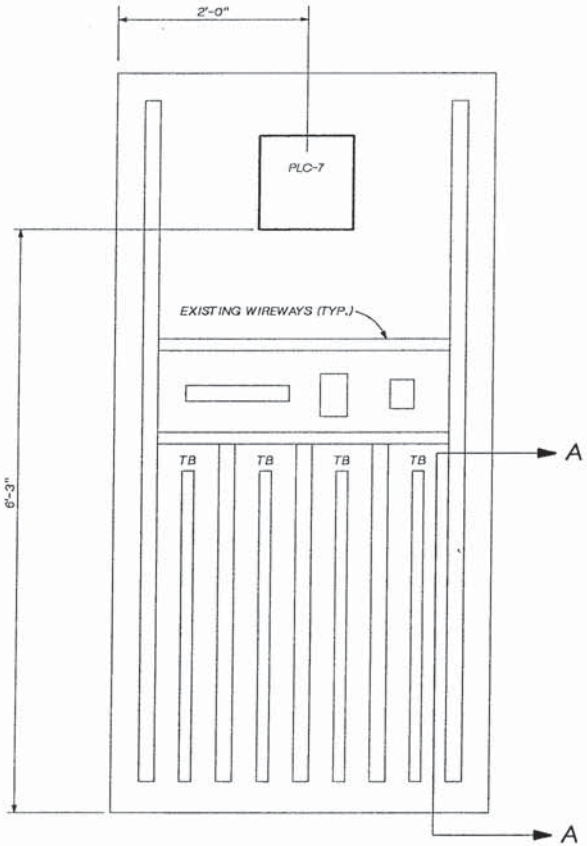

EXISTING POP PANEL FRONT VIEW

(DOORS REMOVED)

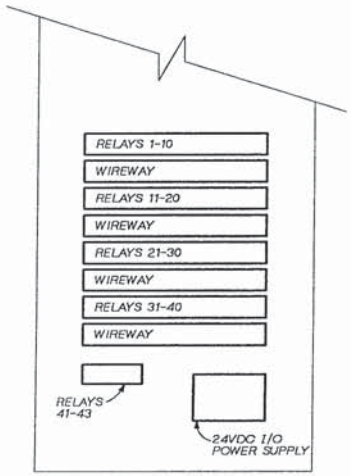

EXISTING POP PANEL SECTION A

NOTES: 1. FIELD TO ENGRAVE EXISTING SPARE WINDOW "MONITORING / SYSTEM / ALARM" (LINE 1) (LINE 2) (LINE 3) FIELD TO PROVIDE ALARM CARD FOR THIS WINDOW IF IT DOES NOT EXIST. EXISTING ANNUNCIATOR IS A RIS MODEL AN-100.

LINE LEGEND

EXISTING

NEW

KAREN A. HOOD — REGISTERED PROFESSIONAL ENGINEER

CH2M HILL

DSGN	G.CONLEY
DR	G. SLAYTER
CHK	R BAKER
APVD	K HOOD

NO.	DATE	REVISION	BY	APVD

REUSE OF DOCUMENTS

THIS DOCUMENT, AND THE IDEAS AND DESIGNS INCORPORATED HEREIN, AS AN INSTRUMENT OF PROFESSIONAL SERVICE, IS THE PROPERTY OF CH2M HILL AND IS NOT TO BE USED, IN WHOLE OR IN PART, FOR ANY OTHER PROJECT WITHOUT THE WRITTEN AUTHORIZATION OF CH2M HILL.

©CH2M HILL

BAR IS ONE INCH ON ORIGINAL DRAWING. 0 1" IF NOT ONE INCH ON THIS SHEET, ADJUST SCALES ACCORDINGLY.

CITY OF WENATCHEE, WASHINGTON
WASTEWATER TREATMENT PLANT IMPROVEMENTS

INSTRUMENTATION AND CONTROL
MODIFICATIONS TO EXISTING POP ELEVATION

DWG NO. 300-N-37
DATE NOV. 1990
PROJ. NO. SEA24579.N1

DATE: 11-6-90
DRAWN BY: G. SLAYTER DESIGNED BY: G. CONLEY
DGN NAME: 0:/PROJ2/WENATCHE/WE300NAL.DGN

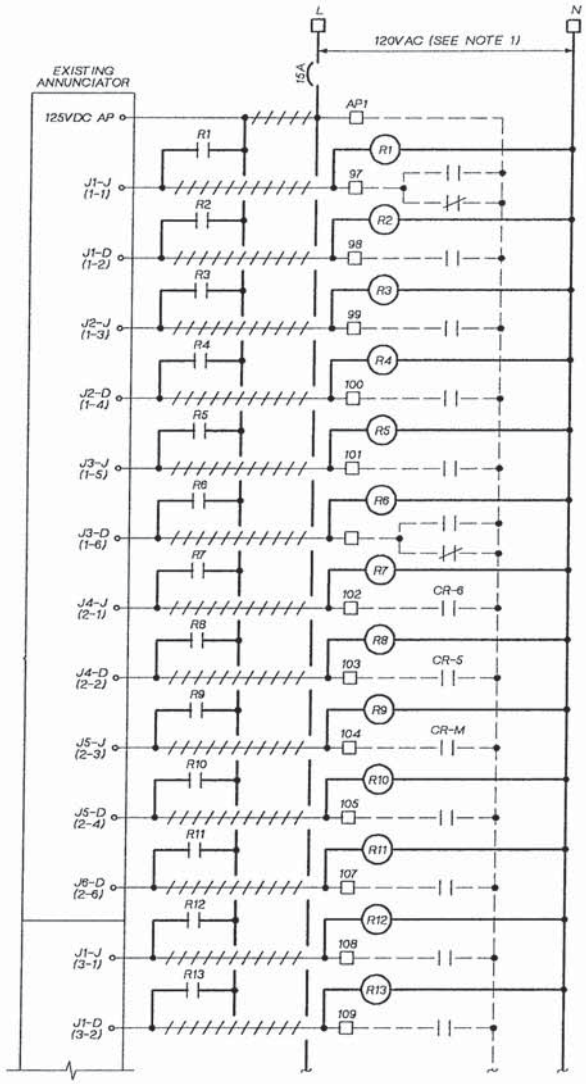

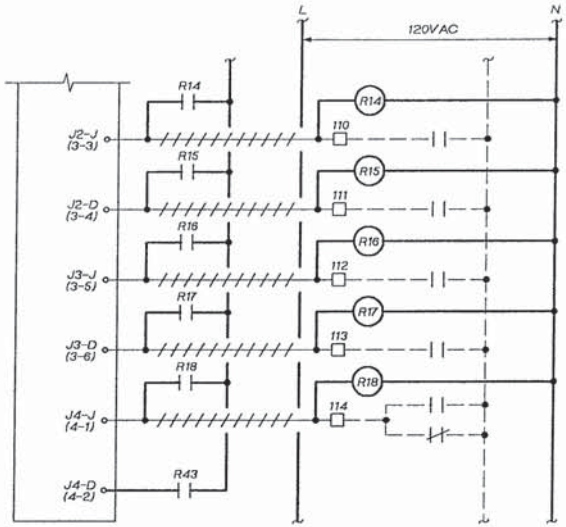

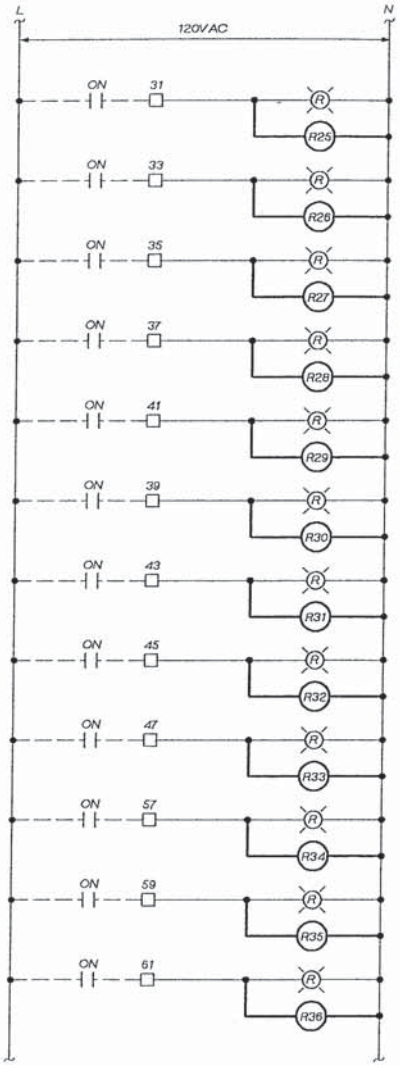

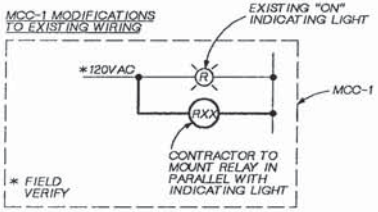

HEAT EXCHANGER BLOWER - R37
HEAT EXCHANGER CIRC. PUMP - R38
De - HUMIDIFIER - R39
SUMP PUMP - R40
WATER SEAL UNIT-IN MOTOR ROOM - R41
WATER SEAL UNIT-IN PIPE GALLERY - R42

NOTES:
1. NEW 120VAC SHOWN ON THIS DWG. FROM PLANT EMERGENCY POWER.

LINE LEGEND

- TO BE REMOVED
- NEW
- EXISTING
- FIELD WIRING

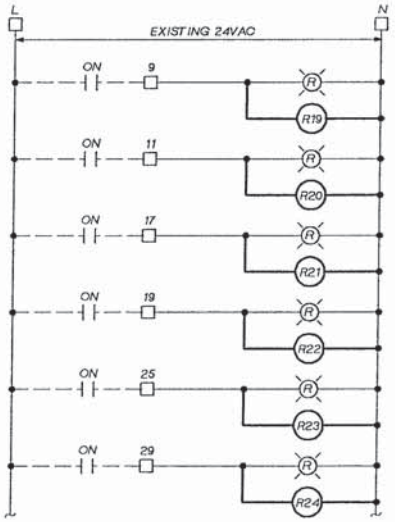

KAREN A. HOOD REGISTERED PROFESSIONAL ENGINEER

CH2M HILL

DSGN	G. CONLEY
DR	G. SLAYTER
CHK	R BAKER
APVD	K HOOD

NO.	DATE	REVISION	BY	APVD

REUSE OF DOCUMENTS
THIS DOCUMENT, AND THE IDEAS AND DESIGNS INCORPORATED HEREIN, AS AN INSTRUMENT OF PROFESSIONAL SERVICE, IS THE PROPERTY OF CH2M HILL AND IS NOT TO BE USED, IN WHOLE OR IN PART, FOR ANY OTHER PROJECT WITHOUT THE WRITTEN AUTHORIZATION OF CH2M HILL.
©CH2M HILL

BAR IS ONE INCH ON ORIGINAL DRAWING. 0 1"
IF NOT ONE INCH ON THIS SHEET, ADJUST SCALES ACCORDINGLY.

CITY OF WENATCHEE, WASHINGTON
WASTEWATER TREATMENT PLANT IMPROVEMENTS

INSTRUMENTATION AND CONTROL
EXISTING POP CONTROL PANEL ELEMENTARY DIAGRAM

DWG NO. 300-N-38
DATE NOV. 1990
PROJ. NO. SEA24579.N1

DATE: 11-6-90
DRAWN BY: G. SLAYTER DESIGNED BY: G. CONLEY
DGN NAME: 0:/PROJ2/WENATCHE/WE300NAM.DGN

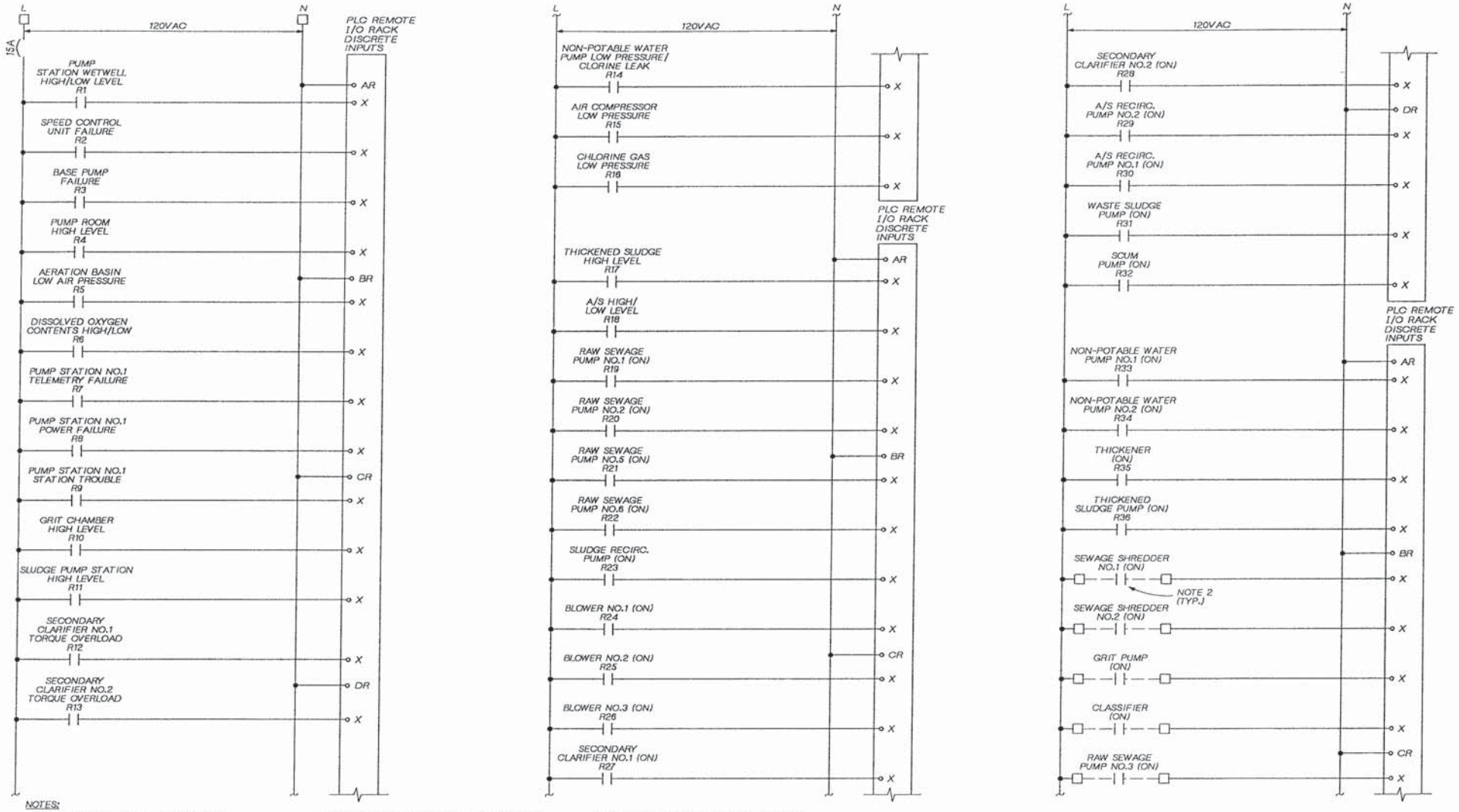

NOTES:

1. 120VAC SHOWN ON THIS DWG FROM PLC-7 UNINTERRUPTIBLE POWER SUPPLY.
2. SPARE CONTACTS AVAILABLE ON EXISTING MOTOR STARTER RELAYS IN MCC-1.
3. ALL CIRCUITS SHOWN ARE NEW EXCEPT WHERE NOTED.

KAREN A. HOOD — STATE OF WASHINGTON — REGISTERED PROFESSIONAL ENGINEER

CH2M HILL

DSGN	G. CONLEY
DR	G. SLAYTER
CHK	R BAKER
APVD	K HOOD

NO.	DATE	REVISION	BY	APVD

REUSE OF DOCUMENTS

THIS DOCUMENT, AND THE IDEAS AND DESIGNS INCORPORATED HEREIN, AS AN INSTRUMENT OF PROFESSIONAL SERVICE, IS THE PROPERTY OF CH2M HILL AND IS NOT TO BE USED, IN WHOLE OR IN PART, FOR ANY OTHER PROJECT WITHOUT THE WRITTEN AUTHORIZATION OF CH2M HILL.

© CH2M HILL

BAR IS ONE INCH ON ORIGINAL DRAWING. 0 1"
IF NOT ONE INCH ON THIS SHEET, ADJUST SCALES ACCORDINGLY.

CITY OF WENATCHEE, WASHINGTON
WASTEWATER TREATMENT PLANT IMPROVEMENTS

INSTRUMENTATION AND CONTROL
EXISTING POP CONTROL PANEL ELEMENTARY DIAGRAM

DWG NO. 300-N-39
DATE NOV. 1990
PROJ NO. SEA24579.N1

DATE: 11-4-90 DLC
DRAWN BY: G. SLAYTER DESIGNED BY: G. CONLEY
DGN NAME: 0:/PROJ2/WENATCHE/WE300NAN.DGN

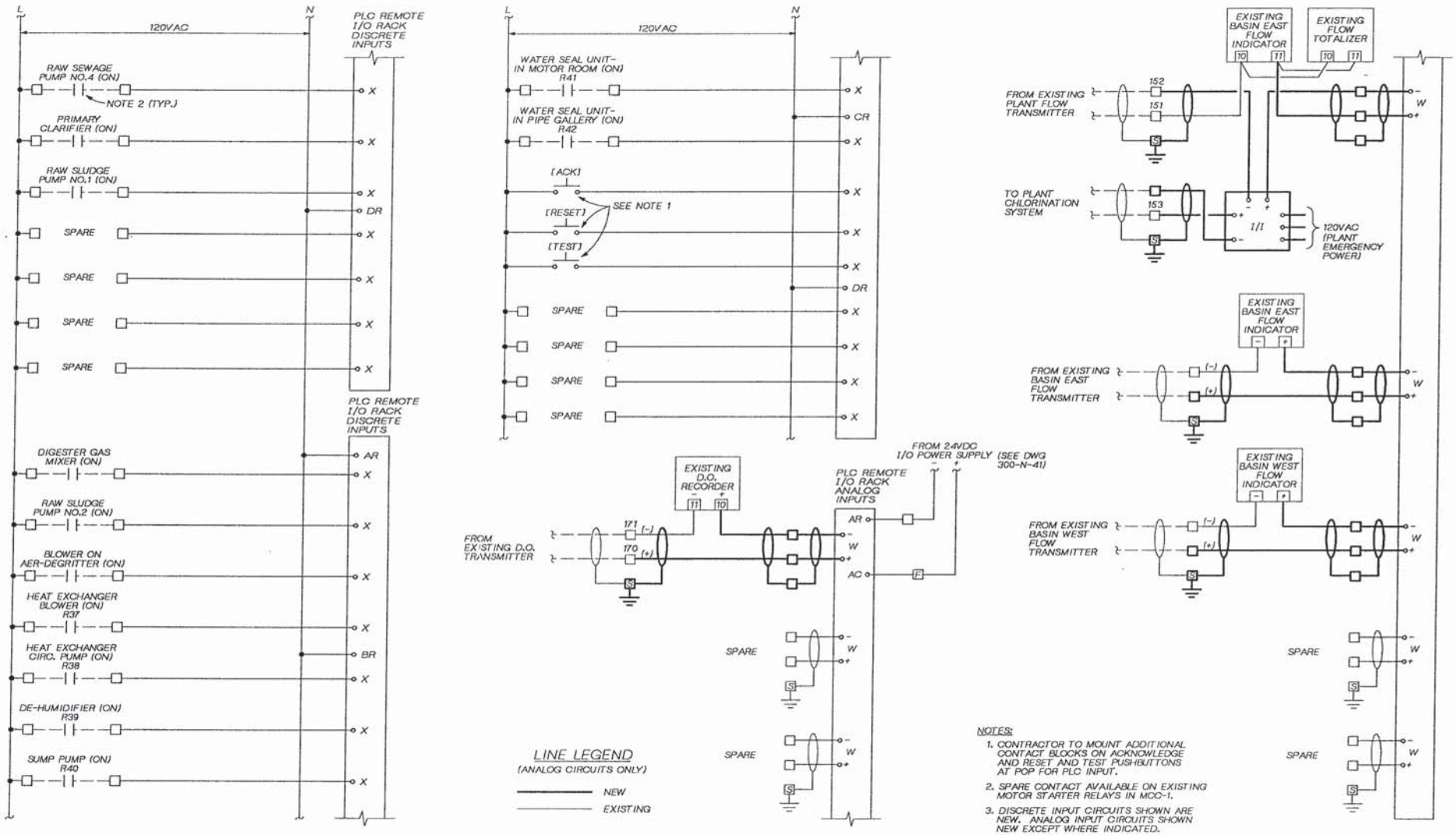

NOTES:

1. CONTRACTOR TO MOUNT ADDITIONAL CONTACT BLOCKS ON ACKNOWLEDGE AND RESET AND TEST PUSHBUTTONS AT POP FOR PLC INPUT.
2. SPARE CONTACT AVAILABLE ON EXISTING MOTOR STARTER RELAYS IN MCC-1.
3. DISCRETE INPUT CIRCUITS SHOWN ARE NEW. ANALOG INPUT CIRCUITS SHOWN NEW EXCEPT WHERE INDICATED.

KAREN A. HOOD — REGISTERED PROFESSIONAL ENGINEER

CH2M HILL

DSGN	G. CONLEY
DR	G. SLAYTER
CHK	R. BAKER
APVD	K. HOOD

NO.	DATE	REVISION	BY	APVD

REUSE OF DOCUMENTS
THIS DOCUMENT, AND THE IDEAS AND DESIGNS INCORPORATED HEREIN, AS AN INSTRUMENT OF PROFESSIONAL SERVICE, IS THE PROPERTY OF CH2M HILL AND IS NOT TO BE USED, IN WHOLE OR IN PART, FOR ANY OTHER PROJECT WITHOUT THE WRITTEN AUTHORIZATION OF CH2M HILL.
©CH2M HILL

BAR IS ONE INCH ON ORIGINAL DRAWING. 0 — 1"
IF NOT ONE INCH ON THIS SHEET, ADJUST SCALES ACCORDINGLY.

CITY OF WENATCHEE, WASHINGTON
WASTEWATER TREATMENT PLANT IMPROVEMENTS

INSTRUMENTATION AND CONTROL
EXISTING POP CONTROL PANEL
ELEMENTARY DIAGRAM

DWG NO. 300-N-40
DATE NOV. 1990
PROJ NO. SEA24579.N1

DATE: 11-6-90 DLC
DRAWN BY: G. SLAYTER DESIGNED BY: G. CONLEY
DGN NAME: 0:/PROJ2/WENATCHE/WE300NAO.DGN

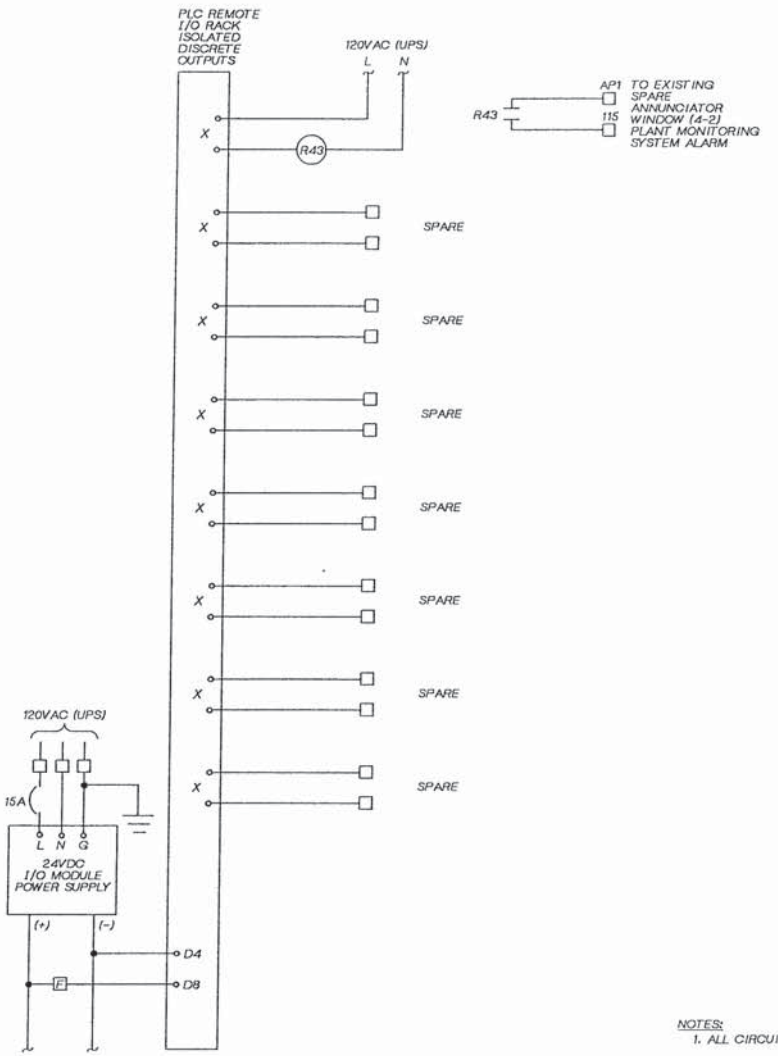

NOTES:
1. ALL CIRCUITS SHOWN ARE NEW.

DSGN G. CONLEY						
DR G. SLAYTER						
CHK R BAKER						
APVD K HOOD	NO.	DATE	REVISION	BY	APVD	

CH2M HILL

REUSE OF DOCUMENTS
THIS DOCUMENT, AND THE IDEAS AND DESIGNS INCORPORATED HEREIN, AS AN INSTRUMENT OF PROFESSIONAL SERVICE, IS THE PROPERTY OF CH2M HILL AND IS NOT TO BE USED, IN WHOLE OR IN PART, FOR ANY OTHER PROJECT WITHOUT THE WRITTEN AUTHORIZATION OF CH2M HILL.
©CH2M HILL

BAR IS ONE INCH ON ORIGINAL DRAWING.
0 1"
IF NOT ONE INCH ON THIS SHEET, ADJUST SCALES ACCORDINGLY.

CITY OF WENATCHEE, WASHINGTON
WASTEWATER TREATMENT PLANT IMPROVEMENTS

INSTRUMENTATION AND CONTROL
EXISTING POP CONTROL PANEL ELEMENTARY DIAGRAM

DWG NO. 300-N-41
DATE NOV. 1990
PROJ NO. SEA24579.N1

DATE: 11-6-90
DRAWN BY: G. SLAYTER DESIGNED BY: G. CONLEY
DGN NAME: O:/PROJ2/WENATCHE/WE300NAP.DGN

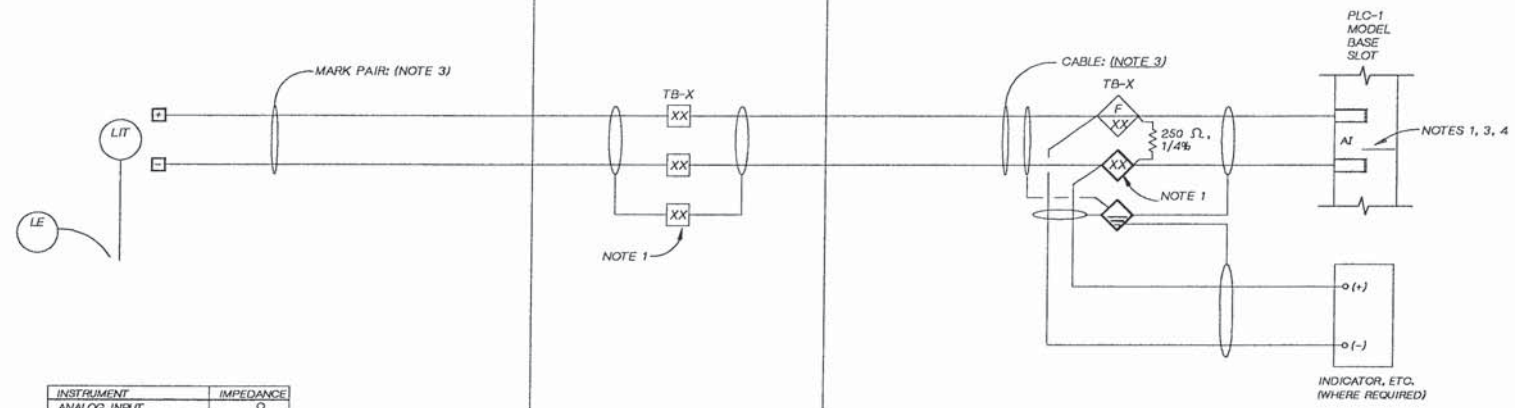

INSTRUMENT	IMPEDANCE
ANALOG INPUT	Ω
WIRE IMPEDANCE	Ω
TOTAL LOOP IMPEDANCE	Ω

(NOTE 6 - TYP)

LOOP	IMPEDANCE
OUTPUT CAPABILITY	Ω
TOTAL LOOP IMPEDANCE	Ω
RESERVE CAPACITY	Ω

TRANSMITTER ZERO

SCALE RANGE	
ELEVATION	
CALIBRATION DATA	

NOTES:

1. X, XX = NUMBER ASSIGNED AS APPROPRIATE BY CONTRACTOR
   F = FUSED TERMINAL BLOCK SIZED BY THE CONTRACTOR.
   AI = ANALOG INPUT (NUMBER ASSIGNED BY THE CONTRACTOR).
2. CONTRACTOR SHALL DEVELOP INDIVIDUAL LOOP DRAWINGS FOR ALL ANALOG LOOPS BASED ON THIS FORMAT.
3. CONTRACTOR SHALL ASSIGN NUMBER
4. CONTRACTOR SHALL PROVIDE 20% SPARE ANALOG INPUTS AND 20% SPARE ANALOG OUTPUTS MINIMUM. ALL SPARE INPUTS AND OUTPUTS SHALL BE PROVIDED AND WIRED TO TERMINAL BLOCKS.
5. CONTRACTOR SHALL SHOW ALL FIELD TERMINAL JUNCTION BOXES AND ASSOCIATED TERMINATIONS.
6. CONTRACTOR SHALL MEASURE AND RECORD ALL LOOP IMPEDANCE DATA FOR AS-BUILT DRAWING SUBMITTALS.

KAREN A. HOOD — STATE OF WASHINGTON — REGISTERED PROFESSIONAL ENGINEER

CH2M HILL

DSGN	G. CONLEY
DR	G. SLAYTER
CHK	R BAKER
APVD	K HOOD

NO.	DATE	REVISION	BY	APVD

REUSE OF DOCUMENTS
THIS DOCUMENT, AND THE IDEAS AND DESIGNS INCORPORATED HEREIN, AS AN INSTRUMENT OF PROFESSIONAL SERVICE, IS THE PROPERTY OF CH2M HILL AND IS NOT TO BE USED, IN WHOLE OR IN PART, FOR ANY OTHER PROJECT WITHOUT THE WRITTEN AUTHORIZATION OF CH2M HILL.
©CH2M HILL

BAR IS ONE INCH ON ORIGINAL DRAWING.
0 1"
IF NOT ONE INCH ON THIS SHEET, ADJUST SCALES ACCORDINGLY.

CITY OF WENATCHEE, WASHINGTON
WASTEWATER TREATMENT PLANT IMPROVEMENTS

INSTRUMENTATION AND CONTROL
TYPICAL LOOP DIAGRAM

DWG NO. 300-N-42
DATE NOV. 1990
PROJ NO. SEA24579.N1

DATE: 11-6-90
DRAWN BY: G. SLAYTER DESIGNED BY: G. CONLEY
DGN NAME: O:/PROJ2/WENATCHE/WE300NAQ.DGN

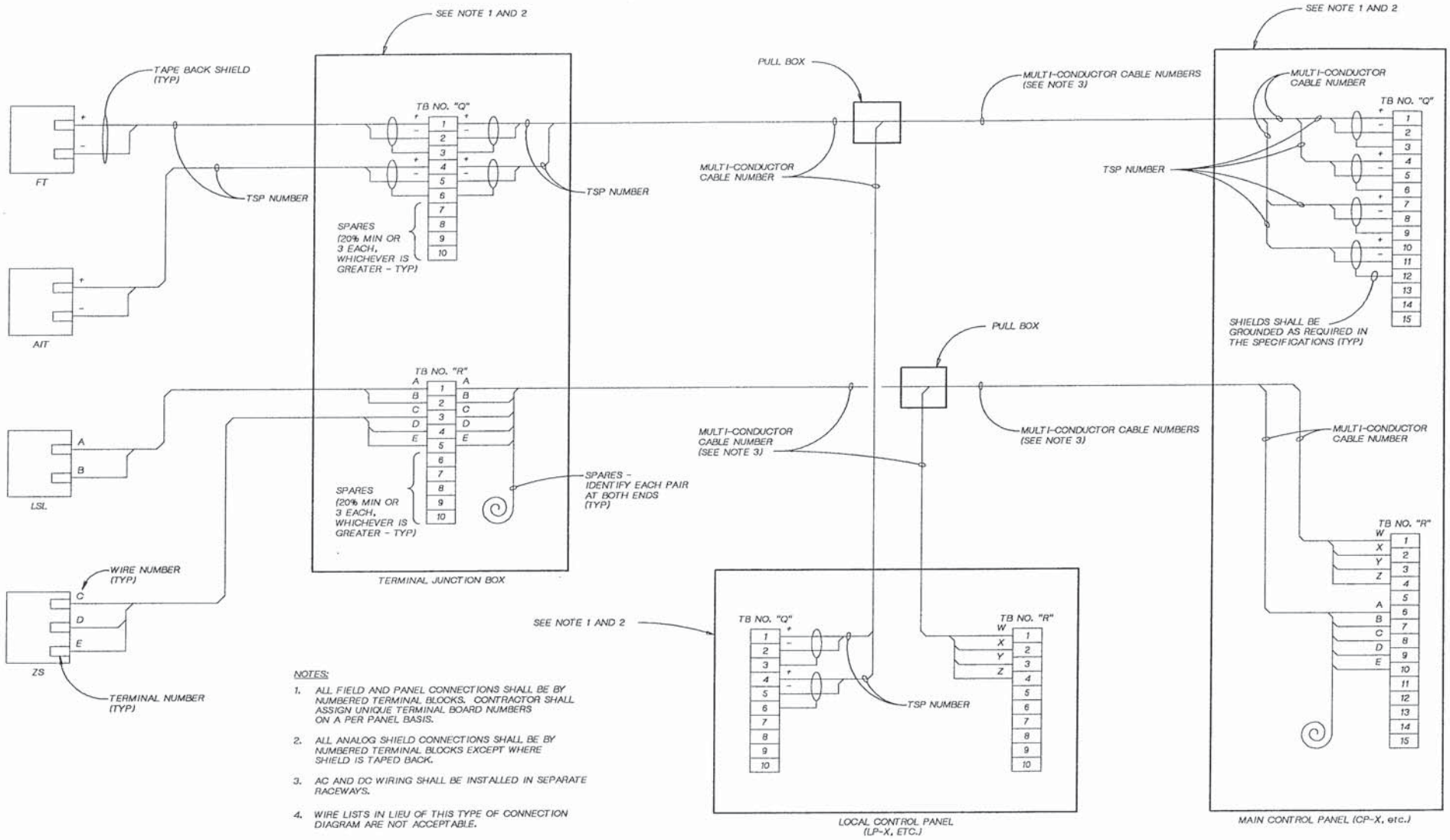

NOTES:

1. ALL FIELD AND PANEL CONNECTIONS SHALL BE BY NUMBERED TERMINAL BLOCKS. CONTRACTOR SHALL ASSIGN UNIQUE TERMINAL BOARD NUMBERS ON A PER PANEL BASIS.
2. ALL ANALOG SHIELD CONNECTIONS SHALL BE BY NUMBERED TERMINAL BLOCKS EXCEPT WHERE SHIELD IS TAPED BACK.
3. AC AND DC WIRING SHALL BE INSTALLED IN SEPARATE RACEWAYS.
4. WIRE LISTS IN LIEU OF THIS TYPE OF CONNECTION DIAGRAM ARE NOT ACCEPTABLE.

KAREN A. HOOD — STATE OF WASHINGTON — REGISTERED PROFESSIONAL ENGINEER

CH2M HILL

DSGN	G. CONLEY
DR	G. SLAYTER
CHK	R BAKER
APVD	K HOOD

NO.	DATE	REVISION	BY	APVD

REUSE OF DOCUMENTS

THIS DOCUMENT, AND THE IDEAS AND DESIGNS INCORPORATED HEREIN, AS AN INSTRUMENT OF PROFESSIONAL SERVICE, IS THE PROPERTY OF CH2M HILL AND IS NOT TO BE USED, IN WHOLE OR IN PART, FOR ANY OTHER PROJECT WITHOUT THE WRITTEN AUTHORIZATION OF CH2M HILL.

© CH2M HILL

BAR IS ONE INCH ON ORIGINAL DRAWING.
0 1"
IF NOT ONE INCH ON THIS SHEET, ADJUST SCALES ACCORDINGLY.

CITY OF WENATCHEE, WASHINGTON
WASTEWATER TREATMENT PLANT IMPROVEMENTS

INSTRUMENTATION AND CONTROL
TYPICAL FIELD CONNECTION DIAGRAM

DWG NO. 300-N-43
DATE NOV. 1990
PROJ. NO. SEA24579.N1

DATE: 11/07/90 BIC
DRAWN BY: CM BLACKWELL DESIGNED BY: TB JOYCE
DGN NAME: O:/PROJ2/WENATCHE/WE400E-A

ELECTRICAL LEGEND

SYMBOL	DESCRIPTION
	CONNECTION POINT TO EQUIPMENT SPECIFIED. FURNISHED AND INSTALLED UNDER OTHER SECTIONS. RACEWAY, CONDUCTOR AND CONNECTION IN THIS SECTION.
MCC-A	MAJOR ELECTRICAL COMPONENT OR DEVICE - NAME OR IDENTIFYING SYMBOL AS SHOWN.
	BRANCH CIRCUIT PANEL BOARD
UH1	UNIT HEATER NO.1
TTC	TELEPHONE TERMINAL CABINET
TJB	TERMINAL JUNCTION BOX
10	WOUND-ROTOR MOTOR, HORSEPOWER INDICATED
5	MOTOR, SQUIRREL CAGE INDUCTION, HORSEPOWER INDICATED
1	LUMINAIRE, SEE SCHEDULE
2	LUMINAIRE, SEE SCHEDULE
3	LUMINAIRE AND POLE, SEE SCHEDULE
4	WALL MOUNTED LUMINAIRE, SEE SCHEDULE
5	FLOOD LIGHTS - AIM IN THE DIRECTION SHOWN
	EXIT LIGHTS, SEE SCHEDULE
S_a or 2a	SMALL LETTER SUBSCRIPT AT SWITCH AND LUMINAIRE INDICATES SWITCHING. SUBSCRIPT NUMBER AT LUMINAIRE INDICATES CIRCUIT IN PANELBOARD.
LA-2	HOME RUN - DESTINATION SHOWN
#/G	EXPOSED CONDUIT AND CONDUCTORS, UNLESS OTHERWISE NOTED ON DWG.
#/G	CONCEALED CONDUIT AND CONDUCTORS*
	NOTE: * ALL UNMARKED CONDUIT RUNS CONSIST OF TWO NO.12 CONDUCTORS AND ONE NO.12 GROUND. RUNS MARKED W/ CROSSHATCHES INDICATE NUMBER OF NO.12 CONDUCTORS. CROSSHATCH WITH SUBSCRIPT "G" INDICATES GREEN GROUND WIRE. SIZE CONDUIT ACCORDING TO SPECIFICATIONS AND APPLICABLE CODE.
#	CROSSHATCHES WITH BAR INDICATE #10 CONDUCTOR. SIZE CONDUIT ACCORDING TO SPECIFICATIONS AND APPLICABLE CODE.
	CONDUIT DOWN
	CONDUIT UP
	CONDUIT, STUBBED AND CAPPED AS SHOWN
C	CABLE TRAY - SEE SPECIFICATIONS
B	BUS DUCT - SEE SPECIFICATIONS
P	TRENCHING FOR UTILITY COMPANY PRIMARY POWER CKTS
T	TRENCHING FOR TELEPHONE COMPANY CIRCUITS
CE	CONCRETE ENCASED CONDUIT
DB	DIRECT BURIED CONDUIT
S	WALL SWITCH: 2- DOUBLE POLE, 3- THREE WAY, 4- FOUR WAY, P- PILOT LIGHT, K- KEY OPERATED, D- DIMMER, WP-WEATHERPROOF, CRE-CORROSION RESISTANT
S_M	MANUAL MOTOR STARTER SWITCH
G	GROUNDING CONDUCTOR

SYMBOL	DESCRIPTION
	CONVENIENCE RECEPTACLE - DUPLEX UNLESS SPECIFIED OTHERWISE. WP-WEATHERPROOF, TL-TWIST LOCK, C- CLOCK HANGER, CRE-CORROSION RESISTANT
	CONVENIENCE RECEPTACLE, PEDESTAL, DUPLEX SINGLE FACE UNLESS INDICATED OTHERWISE
30	RECEPTACLE - 240V., 1Ø, AMPERAGE INDICATED
30	RECEPTACLE, SPECIAL PURPOSE - AMPERAGE AS INDICATED
	DUPLEX CONVENIENCE RECEPTACLE - FLUSH IN FLOOR
	MULTI OUTLET ASSEMBLY
	WALL CLOCK WITH CLOCK HANGER CONVENIENCE RECEPTACLE
	TELEPHONE RECEPTACLE (OUTLET BOX ONLY) FLUSH IN FLOOR
	TELEPHONE OUTLET
J or HOA	GENERAL CONTROL OR WIRING DEVICE. LETTER SYMBOLS OR ABBREVIATIONS INDICATE TYPE OF DEVICE.
PB	PUSH-BUTTON STATION. FOR TYPE PUSH BUTTON REQUIRED, SEE CONTROL DIAGRAMS.
30	NONFUSED DISCONNECT SWITCH, SIZE INDICATED. 3 POLE UNLESS INDICATED OTHERWISE.
60/40	FUSED DISCONNECT SWITCH, SIZE INDICATED (60/40, 60 = SWITCH RATING; 40 = FUSE RATING) 3 POLE UNLESS INDICATED OTHERWISE.
2	CONTACTOR, MAGNETIC, NEMA SIZE INDICATED.
30 L	LIGHTING CONTACTOR, CURRENT RATING INDICATED. FOR NUMBER OF POLES, SEE CONTROL DIAGRAM.
2	STARTER MAGNETIC NEMA SIZE INDICATED. SEE CONTROL DIAGRAM.
2	COMBINATION (FUSE OR CIRCUIT BREAKER AS INDICATED) MAGNETIC STARTER, NEMA SIZE INDICATED, SEE CONTROL DIAGRAM.
	METERING FACILITIES
	MULTI-PARTY DESK TOP COMMUNICATIONS SYSTEM STATION WITH REMOTE AMPLIFIER
W	MULTI-PARTY WALL MOUNTED COMMUNICATIONS SYSTEM STATION WITH INTEGRAL AMPLIFIER
	CONE TYPE PAGING SPEAKER, CEILING MOUNTED
	INTERIOR PAGING TRUMPET SOUND REPRODUCER, WITH REMOTE AMPLIFIER, SURFACE MOUNTED.
	OUTDOOR PAGING TRUMPET SOUND REPRODUCER, WITH REMOTE AMPLIFIER, SURFACE MOUNTED.
	TERMINAL CABINET FOR COMMUNICATIONS SYSTEM
F	FIRE ALARM STATION, MANUAL
FA	FIRE ALARM STATION, AUTOMATIC, SMOKE DETECTOR
F	FIRE ALARM BELL
F	FIRE ALARM HORN/STROBE
FD	AIR DUCT SMOKE DETECTOR
EOL	FIRE ALARM CIRCUIT END OF LINE RESISTOR
	GROUNDING ROD

SYMBOL	DESCRIPTION
	CONTACT - NORMALLY OPEN WITH NEMA SIZE INDICATED AS APPLICABLE
	CONTACT - NORMALLY CLOSED WITH NEMA SIZE INDICATED AS APPLICABLE
	OVERLOAD RELAY HEATER
	MAGNETIC STARTER WITH NEMA SIZE INDICATED
100/M	CIRCUIT BREAKER, MAGNETIC TRIP ONLY, FRAME SIZE SHOWN, 3 POLE UNLESS INDICATED OTHERWISE.
400	CIRCUIT BREAKER, THERMAL MAGNETIC TRIP SHOWN, 3 POLE UNLESS INDICATED OTHERWISE.
100	SWITCH - CURRENT RATING INDICATED, 3 POLE UNLESS INDICATED OTHERWISE.
225	FUSE - RATING INDICATED
	DRAWOUT CIRCUIT BREAKER, LOW VOLTAGE
	DRAWOUT CIRCUIT BREAKER, MEDIUM VOLTAGE
	DRAWOUT FUSED SWITCH, MEDIUM VOLTAGE
	SURGE ARRESTER
10	CAPACITOR - KVAR INDICATED
SW 0-600V	METER WITH SWITCH - SCALE RANGE SHOWN
	GROUND
120V or 120/240V 15 KVA 1 PH	TRANSFORMER, SECONDARY VOLTAGES, PHASE AND RATING INDICATED AS APPLICABLE
GFR 25A 0.1	PICK-UP SETTING / TIME CURRENT CHARACTERISTIC } GROUND FAULT RELAY WITH C.T.
	PUSH-BUTTON SWITCH, MOMENTARY CONTACT, NORMALLY OPEN
	PUSH-BUTTON SWITCH, MOMENTARY CONTACT, NORMALLY CLOSED
	PUSH BUTTON SWITCH, MAINTAINED CONTACTS WITH MECHANICAL INTERLOCK
	3 POSITION SELECTOR SWITCH MAINTAINED CONTACT
TDR TC or TDR TO	TIME DELAY RELAY CONTACT (TIME ACTION INDICATED)
	REMOTE DEVICE
O H A 1 2	SELECTOR SWITCH - MAINTAINED CONTACT - CHART IDENTIFIES OPERATION:

	POSITION		
CKT.	HAND	OFF	AUTO
1	X	O	O
2	O	O	X

X - CLOSED CONTACT
O - OPEN CONTACT

SYMBOL	DESCRIPTION
(3)	CURRENT TRANSFORMER, NUMBER INDICATED
A	INDICATING LIGHT, PUSH-TO-TEST, LETTER INDICATES COLOR
A	INDICATING LIGHT - LETTER INDICATES COLOR. A - AMBER, B - BLUE, C - CLEAR, G - GREEN, R - RED, W - WHITE
SV	SOLENOID VALVE

ABBREVIATIONS

ABBREV.	DESCRIPTION
A	AMMETER, AMPERE, AMBER
AF	AMPERE FRAME
AFD	ADJUSTABLE FREQUENCY DRIVE
AFF	ABOVE FINISHED FLOOR
AS	AMMETER SWITCH, AMPERE SENSOR
ASU	AIR SUPPLY UNIT
AT	AMPERE TRIP
ATC	AUTOMATIC THROWOVER CONTROL
ATS	AUTOMATIC TRANSFER SWITCH
B	BELL, BLUE
BC	BARE COPPER
C	CONDUIT, CONTACTOR
CB	CIRCUIT BREAKER
CC	CONTROL CABLE
CKT	CIRCUIT
CPT	CONTROL POWER TRANSFORMER
CR	CONTROL RELAY
CRS	COATED RIGID STEEL CONDUIT
CT	CURRENT TRANSFORMER
DC	DIRECT CURRENT
DIV	DIVISION
E	EMPTY
EF	EXHAUST FAN
EO	ELECTRIC OPERATOR
ETM	ELAPSED TIME METER
EXST	EXISTING
EP	EXPLOSION PROOF
FDR	FEEDER
F, FU	FUSE
FLR	FLOOR
FLUOR	FLUORESCENT
FVNR	FULL VOLTAGE NON-REVERSING
FVR	FULL VOLTAGE REVERSING
G	GREEN, GROUND
GALV	GALVANIZED
GFI	GROUND FAULT INTERRUPTER
GFR	GROUND FAULT RELAY
GND	GROUND
H	HIGH SPEED, HORN, HOWLER
HCGS	HIGH COMBUSTIBLE GAS SHUTDOWN
HCP	HEADWORKS CONTROL PANEL
HH	HANDHOLE
HID	HIGH INTENSITY DISCHARGE
HPS	HIGH PRESSURE SODIUM
HVAC	HEATING, VENTILATING & AIR CONDITIONING
IC	INTERRUPTING CAPACITY
I & C	INSTRUMENTATION AND CONTROL
INCAND	INCANDESCENT
INST	INSTANTANEOUS
J, J-BOX	JUNCTION BOX
K	KEY INTERLOCK
L	LIGHTING CONTACTOR, LOW SPEED
LOS	LOCKOUT STOP PUSH BUTTON
LS	LIMIT SWITCH
LT FLEX	LIQUID TIGHT FLEX CONDUIT
LR	LATCHING RELAY

ABBREV.	DESCRIPTION
M	MAGNETIC CONTACTOR COIL
MCC	MOTOR CONTROL CENTER
MDC	MOTORIZED DAMPER CONTROL
MERC	MERCURY VAPOR
MH	MANHOLE
MMP	MECHANICAL MOUNTING PANEL
MO	MOTOR OPERATER
MS	MOTOR STARTER
MSE	MOISTURE SENSOR ELEMENT
MSR	MOISTURE SENSOR RELAY
MT, MTD	MOUNT, MOUNTED
N	NEUTRAL
NA	NON-AUTOMATIC
NC	NORMALLY CLOSED
NL	NIGHT LIGHT
NO	NORMALLY OPEN
NP	NAMEPLATE
OL	OVERLOAD RELAY
PB	PULL BOX, PUSH BUTTON SWITCH
PC	PHOTOCELL
PFR	POWER FAIL RELAY
PNL	PANEL
PS	PRESSURE SWITCH
PT	POTENTIAL TRANSFORMER
PVC	POLYVINYL CHLORIDE CONDUIT
R	RED
RECEPT	RECEPTACLE
RM	REMOTE MULTIPLEXER
RS	RIGID STEEL CONDUIT
RT	REMOTE TELEMETRY
RVNR	REDUCED VOLTAGE NON-REVERSING
RVR	REDUCED VOLTAGE REVERSING
SA	SURGE ARRESTOR
SC	SPEED CONTROL
SCP	SOLIDS HANDLING CONTROL PANEL
SH	SPACE HEATER
S/N	SOLID NEUTRAL
S/PD	SPEED
SST	STAINLESS STEEL
ST	STATIC TRIP
SV	SOLENOID VALVE
SW	SWITCH
T	THERMOSTAT
TB	TERMINAL BOARD
TC	TIME CLOCK, TIME CLOSE
TD	TEMPERATURE DETECTOR RELAY
TDR	TIME DELAY RELAY
TJB	TERMINAL JUNCTION BOX
TM	TIMING RELAY
TO	TIME OPEN
TR	TIMER-REPEAT CYCLE
TS	AUTO TRANSFORMER TEMPERATURE SWITCH
TSL	TEMPERATURE SWITCH LIMITER
TSR	TEMPERATURE SWITCH RELAY
TSP	TWISTED SHIELDED PAIR
TST	TWISTED SHIELDED TRIAD
TYP	TYPICAL
UH	UNIT HEATER
UVR	UNDER VOLTAGE RELAY
V	VOLTMETER, VOLT
VFD	VARIABLE FREQUENCY DRIVE
VS	VOLTMETER SWITCH
W	WATT
WHD	WATTHOUR DEMAND METER
WP	WEATHERPROOF
XFMR	TRANSFORMER

NOTE:
THIS IS A STANDARD LEGEND SHEET. SOME SYMBOLS OR ABBREVIATIONS MAY APPEAR ON THIS SHEET AND NOT ON THE PLANS.

CARL V. BRACKETT, STATE OF WASHINGTON, REGISTERED PROFESSIONAL ENGINEER

CH2M HILL

DSGN TB JOYCE
DR CM BLACKWELL
CHK C. BRACKETT
APVD K HOOD

NO.	DATE	REVISION	BY	APVD

REUSE OF DOCUMENTS
THIS DOCUMENT, AND THE IDEAS AND DESIGNS INCORPORATED HEREIN, AS AN INSTRUMENT OF PROFESSIONAL SERVICE, IS THE PROPERTY OF CH2M HILL AND IS NOT TO BE USED, IN WHOLE OR IN PART, FOR ANY OTHER PROJECT WITHOUT THE WRITTEN AUTHORIZATION OF CH2M HILL.
©CH2M HILL

BAR IS ONE INCH ON ORIGINAL DRAWING. 0 — 1"
IF NOT ONE INCH ON THIS SHEET, ADJUST SCALES ACCORDINGLY.

CITY OF WENATCHEE, WASHINGTON
WASTEWATER TREATMENT PLANT IMPROVEMENTS

ELECTRICAL
ELECTRICAL LEGEND AND ABBREVIATIONS

DWG NO. 400-E-1
DATE NOV. 1990
PROJ NO. SEA24579.N1

DRAWN BY: B. CARR DESIGNED BY: TB JOYCE
DGN NAME: O:/PROJ2/WENATCHE/ WE400E-C.DGN

[A] 5 - [3½"C, 4 #500 MCM] MAIN FDR
1 - [4" C.O.] TERMINATE IN HH

[B] 3 - [3½"C, 3 #500 MCM, 1 #2/0 G] SWBD-1 FDR
1 - [3½"C, 3 #500 MCM, 1 #3 G] MCC 4 FDR
1 - [4" C.O.] TERMINATE IN HH

[C] [¾"C, 6 #12] HS-6021
[¾"C, 6 #12] HS-6022
[2" C.O.] TERMINATE IN HH

[D] [¾"C, 2#12, 1#12G] YARD LTG
[1"C, 4 #8, 1 #10G] PNL L4E FDR
[1"C, 3 #12, 1#12G, + 9 #12] M-6011
[1"C, 3 #12, 1#12G, + 9 #12] M-6012
[3/4"C, 4 #12, 1 #12G] CLAR. #1 (LTG. & RCPT)
[3/4"C, 4 #12, 1 #12G] CLAR. #2 (LTG. & RCPT)
[1½"C, 3 #1, 1 #8G] MCC 3E FDR
[2" C.O.] TERMINATE IN HH
[1¼"C, 4#4, 1#8G] PNL LA FDR

[E] [1"C, 2 TYPE 16] TJB-2
[3/4"C, 1 TYPE 16] SCP
[3/4"C.O.] TERMINATE IN MH
[3/4"C.O.] TERMINATE IN MH

[F] [2"C.O.] TERMINATE IN HH
[2"C, 36/C TYPE 1] TJB-3

[G] [2"C, 36/C TYPE 1] TJB-3
[¾"C, 1 TYPE 3] TJB-3

[H] [¾"C, 2#12, 1#12G]YARD LTG
[¾"C, 2 #12, 1 #12G] HEAT TRACE
[3½"C, 3 #500 MCM, 1 #3 G] MCC 4 FDR
[¾"C, 2 #12, 1 #12G] WASTE GAS BURNER CP

[I] [¾"C, 2 #12, 1 #12G] WASTE GAS BURNER CP
[1½"C, 9/C TYPE 1] WASTE GAS BURNER CP
[¾"C, 2#12, 1#12G] YARD LTG
[¾"C, 2#12, 1#12G] HEAT TRACE

[J] [¾"C, 1 TYPE 16] LE-6010

[K] [3½"C, 3 #500 MCM, 1 #3G] MCC 4 FDR
[1"C, 4 #8, 1 #10G] PNL L4E FDR
[2"C, 36/C TYPE 1] TBJ-3
[¾"C, 1 TYPE 3] TBJ-3

[L] 3 - [3½"C, 3 #500 MCM, 1 #2/0 G] SWBD-1 FDR
1 - [1½"C, 3 #1, 1 #8G] MCC 3E FDR
2 - [2"C, 36/C TYPE 1] TJB-3
[¾"C, 1 TYPE 3] TJB-3

[M] [¾"C, 1 TYPE 16] SCP

[N] [1"C, 3 #12, 1#12G, + 9 #12] M-6011
[1"C, 3 #12, 1#12G, + 9 #12] M-6012
[¾"C, 4#12, 1 #12G] CLAR. #1 (LTG. & RCPT)
[¾"C, 4#12, 1 #12G] CLAR. #2 (LTG. & RCPT)
[¾"C, 6 #12] HS-6021
[¾"C, 6 #12] HS-6022
[2" C.O.] TERMINATE IN HH
[¾"C, 2#12, 1#12G] YARD LTG

[O] [1"C, 3 #12, 1#12G, + 9 #12] M-6011
[3/4"C, 4 #12, 1 #12G] CLAR. #1 (LTG. & RCPT)

[P] [1"C, 3 #12, 1#12G, + 9 #12] M-6012
[3/4"C, 4 #12, 1 #12G] CLAR. #2 (LTG. & RCPT)

[Q] 3 - [EXST 3½"C, PULL IN 3 #500 MCM, 1#2/0 G] SWBD-1 FDR
1 - [EXST 3½"C, PULL IN 3 #1 , 1 #8G] MCC 3E FDR

[R] [1"C, 4#8, 1#10G] PNL L4E FDR

[S] 5 - [EXST 3½"C, PULL IN 4 #500 MCM] MAIN FDR

[T] [1 1/4C, 4#4, 1 #8G] PNL LA FDR

[U] [¾"C, 6 #12] HS-6021

[V] [¾"C, 6 #12] HS-6022

[W] [1½"C, 9/C TYPE 1] WASTE GAS BURNER CP

[X] [¾"C, 1 TYPE 3] TJB-3
2-[2"C, 36/C TYPE1] TJB-3

[Y] [1"C, 2 TYPE 16]
[1"C, 0] TERMINATE IN HH

[Z] [¾"C, 2#12, 1#12G] WASTE GAS BURNER CP
[1½"C, 9/C TYPE 1] WASTE GAS BURNER CP

NOTES:

1) SEE DETAIL 1 / 400-E-22

2) 17"W x 20"L x 12"D CONCRETE JUNCTION BOX WITH TRAFFIC RATED TOP, RENTON CONCRETE PRODUCTS; J20-BH OR EQUAL.

3) LEAVE 15'-0" OF CONDUCTOR SLACK IN EXST TRANSFORMER VAULT. SECONDARY CONNECTIONS BY PUD.

0 30 60 90
SCALE: 1" = 30'

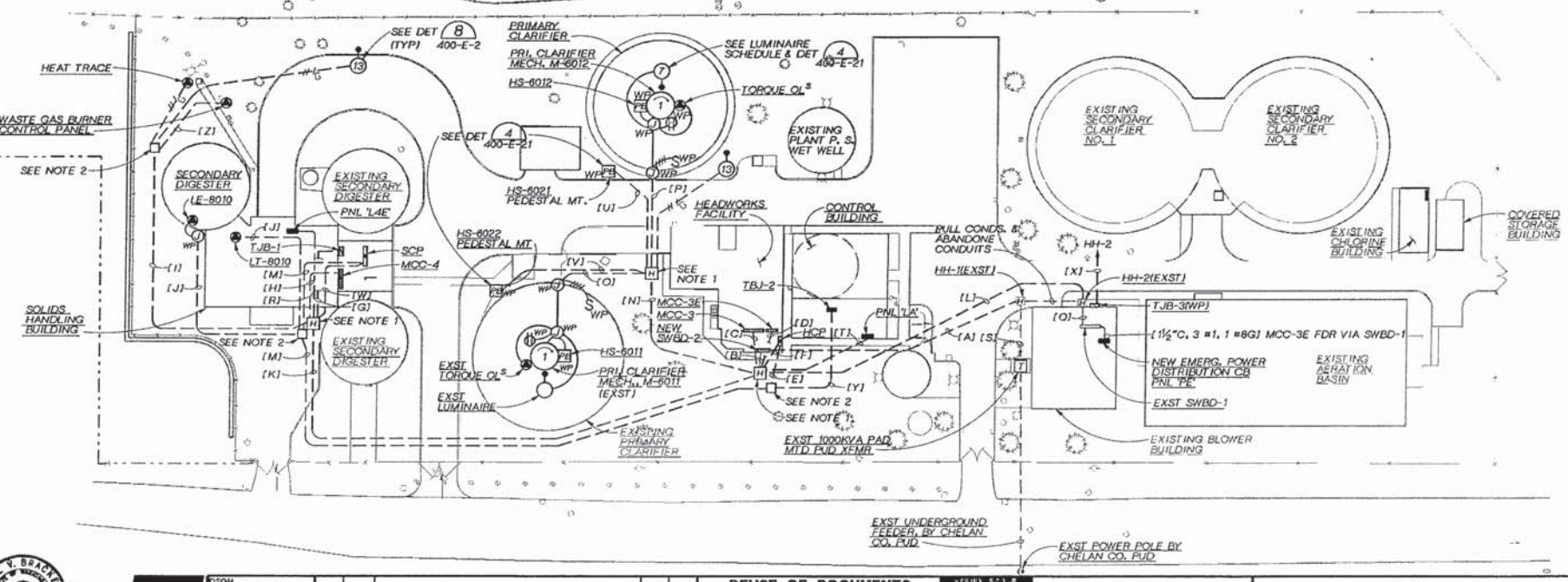

GARY V. BRACKETT — REGISTERED PROFESSIONAL ENGINEER

CH2M HILL

DSGN	TB JOYCE
DR	J BROWN
CHK	C. BRACKETT
APVD	K HOOD

NO.	DATE	REVISION	BY	APVD

REUSE OF DOCUMENTS
THIS DOCUMENT, AND THE IDEAS AND DESIGNS INCORPORATED HEREIN, AS AN INSTRUMENT OF PROFESSIONAL SERVICE, IS THE PROPERTY OF CH2M HILL AND IS NOT TO BE USED, IN WHOLE OR IN PART, FOR ANY OTHER PROJECT WITHOUT THE WRITTEN AUTHORIZATION OF CH2M HILL.
©CH2M HILL

VERIFY SCALE
BAR IS ONE INCH ON ORIGINAL DRAWING.
0 1"
IF NOT ONE INCH ON THIS SHEET, ADJUST SCALES ACCORDINGLY.

CITY OF WENATCHEE, WASHINGTON
WASTEWATER TREATMENT PLANT IMPROVEMENTS

ELECTRICAL
ELECTRICAL SITE PLAN

DWG NO. 400-E-2
DATE NOV. 1990
PROJ. NO. SEA24579.N1

DATE: 11/8/90 CJB
DRAWN BY: T. JOYCE DESIGNED BY: T. JOYCE
DGN NAME: 0:/PROJ2/WENATCHE/WE400E-D.DGN

NOTES:

1. EXISTING EQUIPMENT SHOWN LIGHT LINE WEIGHT.
2. NEW EQUIPMENT SHOWN HEAVY LINE WEIGHT.
3. LEAVE 15'-0" OF CONDUCTOR SLACK IN VAULT UNDERNEATH EXST 1000 KVA TRANSFORMER. TRANSFORMER SECONDARY CONNECTIONS WILL BE MADE BY PUD.
4. ALL WORK SHALL BE COORDINATED WITH CHELAN CO. PUD BEFORE PROJECT CONSTRUCTION BEGINS.
5. REMOVE EXISTING SERVICE CONDUCTORS. REPLACE WITH NEW FDR FROM SWBD-2.

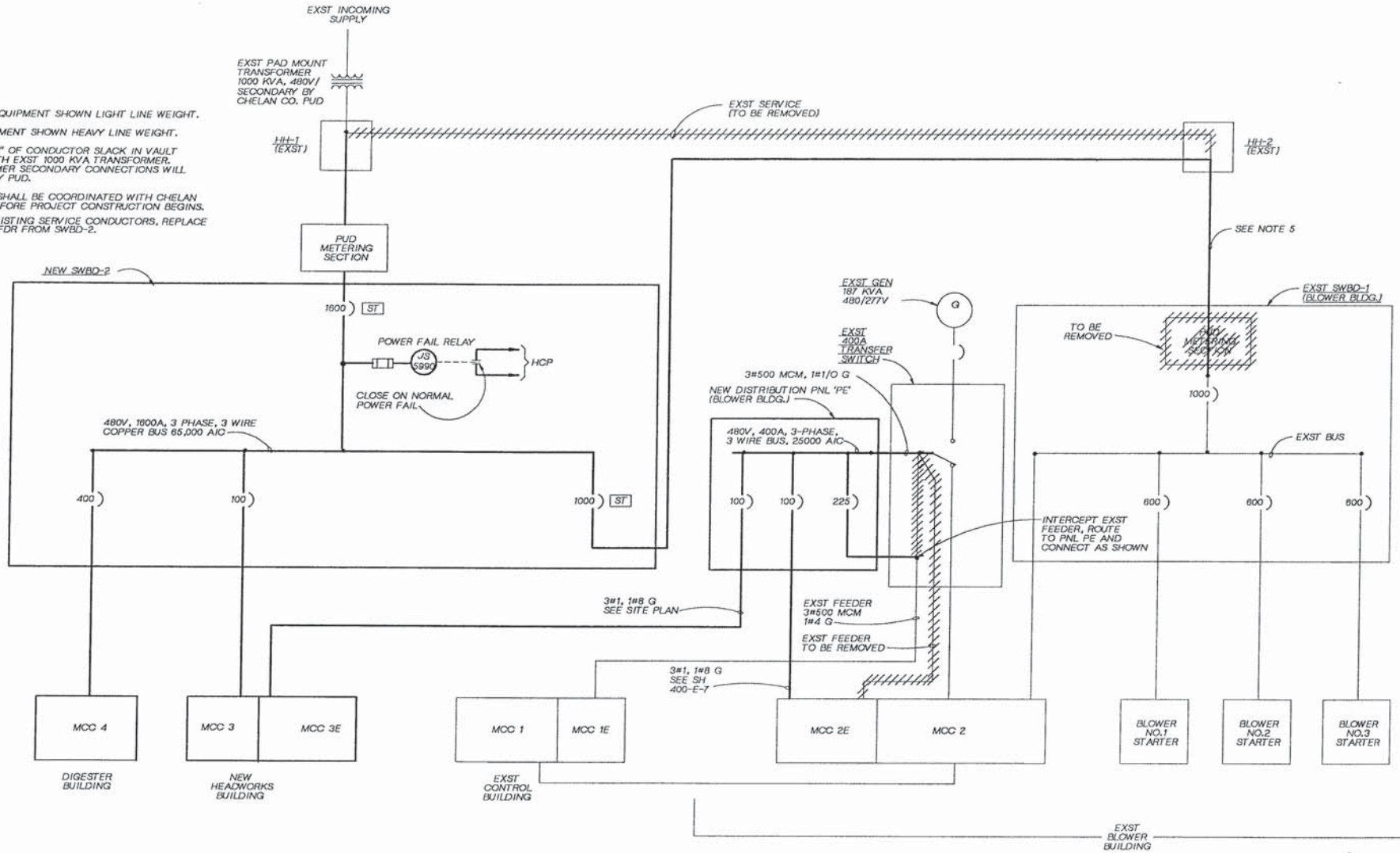

300-E-02, BROWN, 4-10-89

CH2M HILL	DSGN T. JOYCE DR T. JOYCE CHK C. BRACKETT APVD K HOOD	NO. DATE	REVISION	BY APVD	

REUSE OF DOCUMENTS
THIS DOCUMENT, AND THE IDEAS AND DESIGNS INCORPORATED HEREIN, AS AN INSTRUMENT OF PROFESSIONAL SERVICE, IS THE PROPERTY OF CH2M HILL AND IS NOT TO BE USED, IN WHOLE OR IN PART, FOR ANY OTHER PROJECT WITHOUT THE WRITTEN AUTHORIZATION OF CH2M HILL.
©CH2M HILL

BAR IS ONE INCH ON ORIGINAL DRAWING. 0 1"
IF NOT ONE INCH ON THIS SHEET, ADJUST SCALES ACCORDINGLY.

CITY OF WENATCHEE, WASHINGTON
WASTEWATER TREATMENT PLANT IMPROVEMENTS

ELECTRICAL
DISTRIBUTION SYSTEM ONE LINE DIAGRAMS

DWG NO. 400-E-3
DATE NOV. 1990
PROJ. NO. SEA24579.N1

DATE: 11/07/90 BIC
DRAWN BY: T. JOYCE DESIGNED BY: T. JOYCE
DGN NAME: 0:/PROJ2/WENATCHE/WE400E-O.DGN

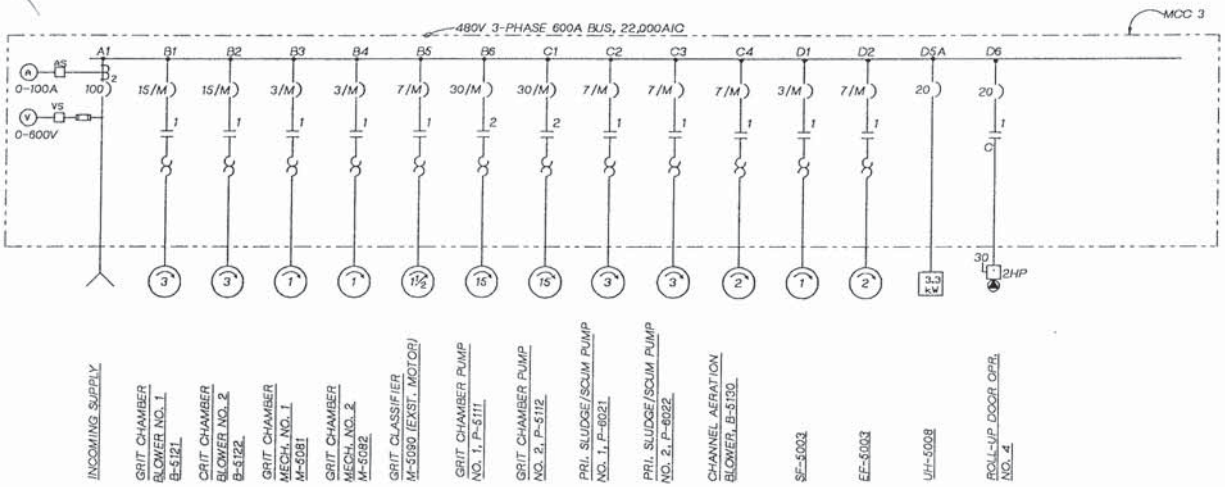

MCC 3-ONE LINE DIAGRAM

LOCATED AT HEADWORKS

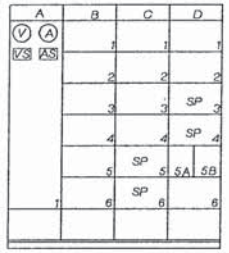

MCC 3-ELEVATION

½"=1'-0"

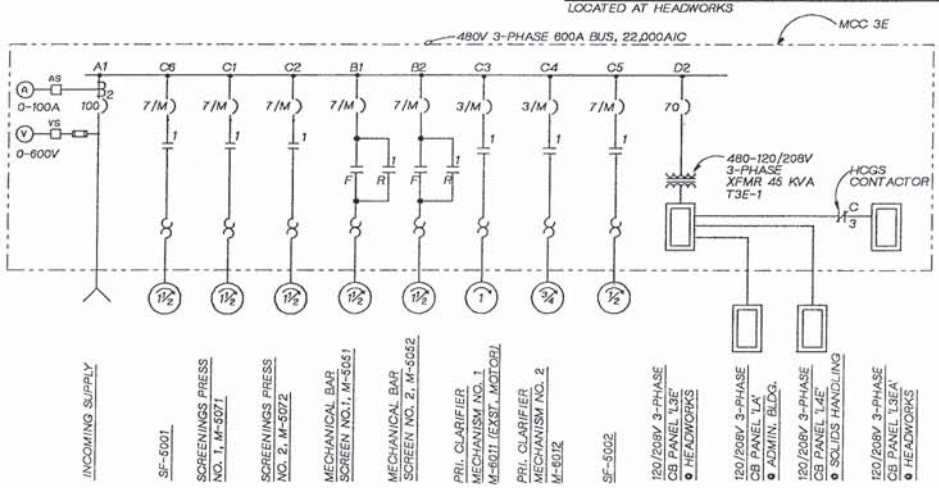

MCC 3E ONE LINE DIAGRAM

LOCATED AT HEADWORKS

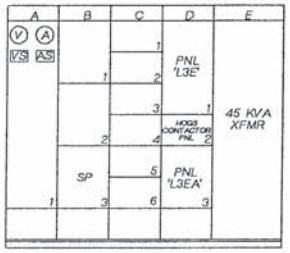

MCC 3E-ELEVATION

½"=1'-0"

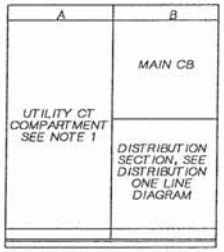

NEW SWITCHBOARD (SWBD-2)-ELEVATION

½"=1'-0"

NOTES:

1) CONTRACTOR SHALL PROVIDE COORDINATION BETWEEN CHELAN CO. PUD AND SWITCHBOARD MFR. FOR PROPER DESIGN OF SWITCHBOARD TO ACCOMODATE UTILITY CURRENT TRANSFORMERS. FOR DETAILS CONTACT MR. SKIP APPLEGARTH OF CHELAN CO. PUD METERING DEPARTMENT; TELEPHONE NO. (509) 663-8121.

2) ALL WORK SHALL BE COORDINATED WITH CHELAN CO. PUD BEFORE PROJECT CONSTRUCTION BEGINS.

EARL F. BRACKETT — REGISTERED PROFESSIONAL ENGINEER

CH2M HILL

DSGN	TOM JOYCE
DR	TOM JOYCE
CHK	C BRACKETT
APVD	K HOOD

NO.	DATE	REVISION	BY	APVD

REUSE OF DOCUMENTS
THIS DOCUMENT, AND THE IDEAS AND DESIGNS INCORPORATED HEREIN, AS AN INSTRUMENT OF PROFESSIONAL SERVICE, IS THE PROPERTY OF CH2M HILL AND IS NOT TO BE USED, IN WHOLE OR IN PART, FOR ANY OTHER PROJECT WITHOUT THE WRITTEN AUTHORIZATION OF CH2M HILL.
©CH2M HILL

BAR IS ONE INCH ON ORIGINAL DRAWING.
0 1"
IF NOT ONE INCH ON THIS SHEET, ADJUST SCALES ACCORDINGLY.

CITY OF WENATCHEE, WASHINGTON
WASTEWATER TREATMENT PLANT IMPROVEMENTS

ELECTRICAL
MOTOR CONTROL CENTER
MCC 3 & MCC 3E
ONE LINE DIAGRAM

DWG NO. 400-E-4
DATE NOV. 1990
PROJ NO. SEA24579.N1

DATE: 11/07/90 BIC
DRAWN BY: T. JOYCE DESIGNED BY: T. JOYCE
DGN NAME: O:/PROJ2/WENATCHE/WE400E-S.DGN

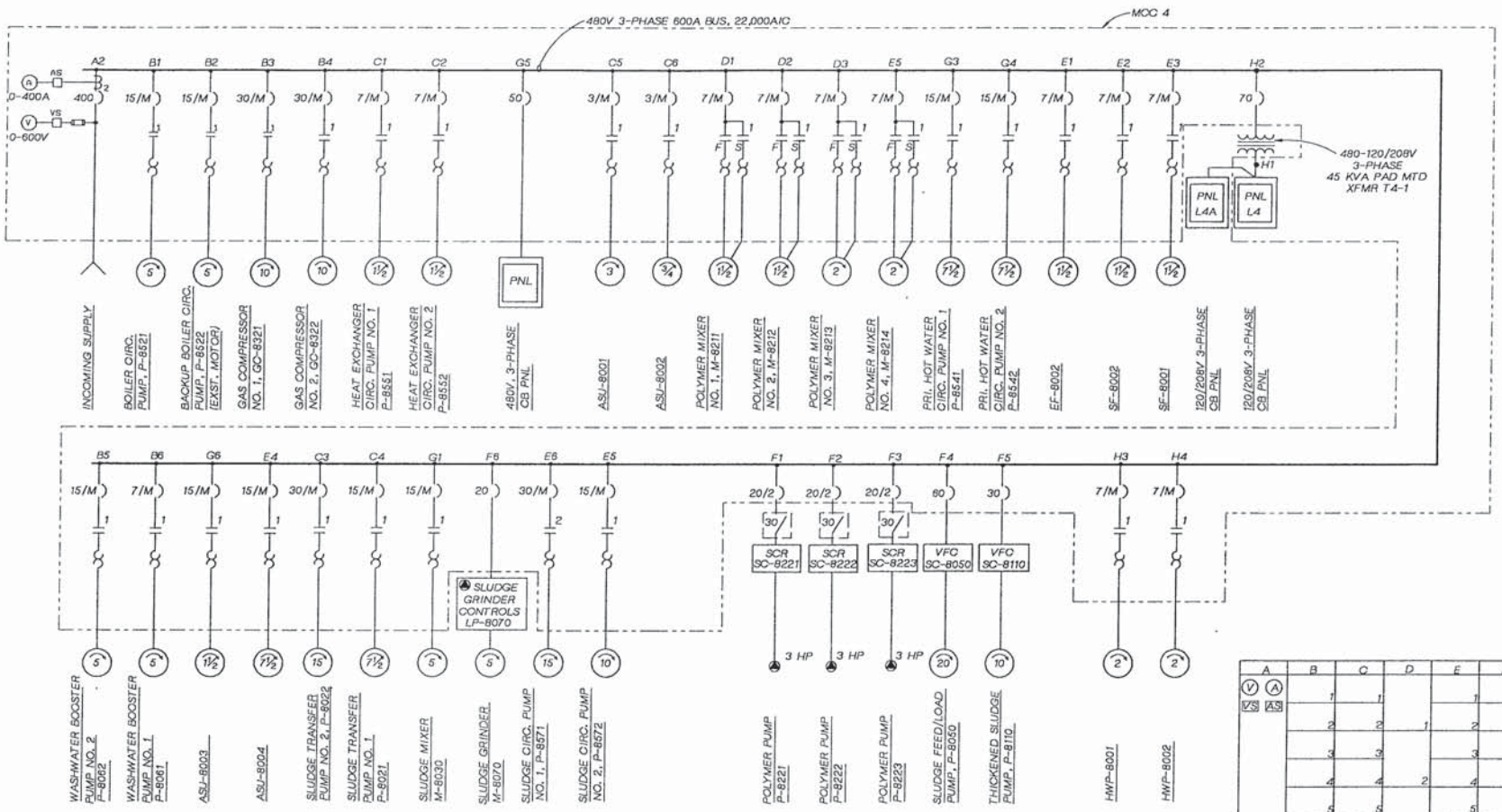

MCC 4-ONE LINE DIAGRAM

LOCATED AT SOLIDS HANDLING

A	B	C	D	E	F	G	H
	1	1		1	1	1	PNL L4
	2	2	1	2	2	SP 2	
	3	3		3	3	3	1
	4	4	2	4	4	4	2
	5	5		5	5	5	3
1	6	6	3	6	6	6	4

MCC 4 -ELEVATION

1/2"=1'-0"

DSGN TOM JOYCE					
DR TOM JOYCE					
CHK C BRACKETT					
APVD K HOOD	NO.	DATE	REVISION	BY	APVD

REUSE OF DOCUMENTS
THIS DOCUMENT, AND THE IDEAS AND DESIGNS INCORPORATED HEREIN, AS AN INSTRUMENT OF PROFESSIONAL SERVICE, IS THE PROPERTY OF CH2M HILL AND IS NOT TO BE USED, IN WHOLE OR IN PART, FOR ANY OTHER PROJECT WITHOUT THE WRITTEN AUTHORIZATION OF CH2M HILL.
©CH2M HILL

BAR IS ONE INCH ON ORIGINAL DRAWING. 0 1"
IF NOT ONE INCH ON THIS SHEET, ADJUST SCALES ACCORDINGLY.

CITY OF WENATCHEE, WASHINGTON
WASTEWATER TREATMENT PLANT IMPROVEMENTS

ELECTRICAL
MOTOR CONTROL CENTER MCC 4
ONE LINE DIAGRAM

DWG NO. 400-E-5
DATE NOV. 1990
PROJ NO. SEA24579.N1

DRAWN BY: CM BLACKWELL DESIGNED BY: J JOYCE
DGN NAME: O:/PROJ2/WENATCHEE/WE400E-E.DGN

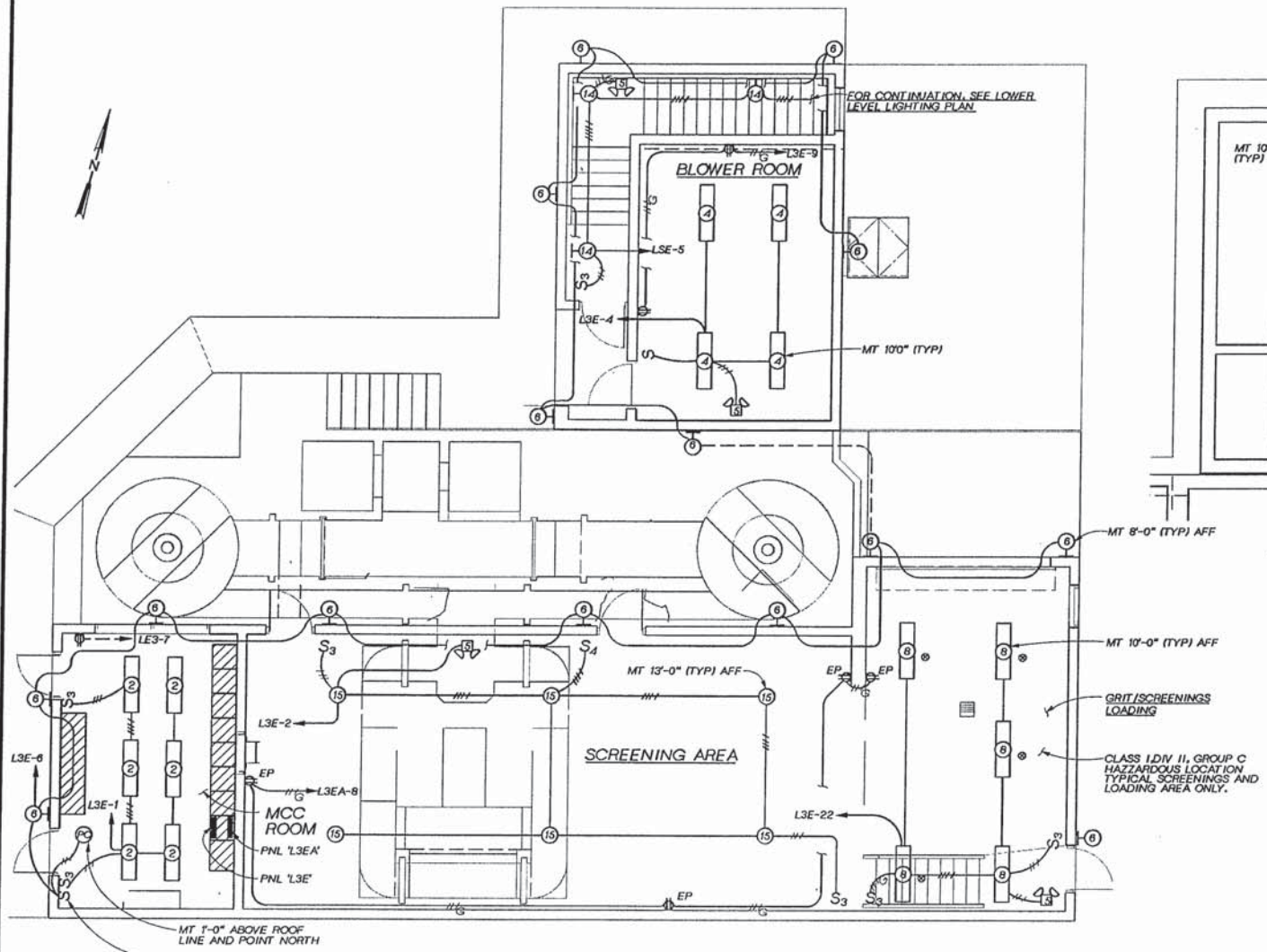

HEADWORKS
UPPER LEVEL LIGHTING PLAN
1/4"=1'-0"

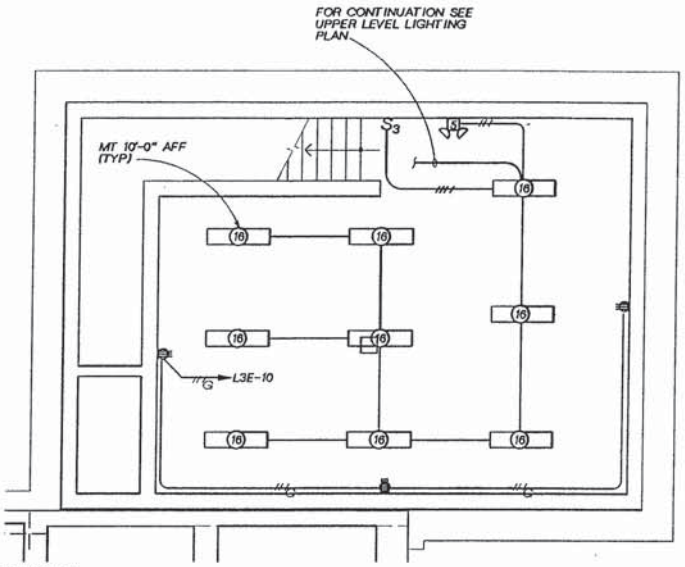

HEADWORKS
LOWER LEVEL LIGHTING PLAN
1/4"=1'-0"

DSGN TOM JOYCE					
DR CM BLACKWELL					
CHK C BRACKETT					
APVD K HOOD	NO.	DATE	REVISION	BY	APVD

REUSE OF DOCUMENTS
THIS DOCUMENT, AND THE IDEAS AND DESIGNS INCORPORATED HEREIN, AS AN INSTRUMENT OF PROFESSIONAL SERVICE, IS THE PROPERTY OF CH2M HILL AND IS NOT TO BE USED, IN WHOLE OR IN PART, FOR ANY OTHER PROJECT WITHOUT THE WRITTEN AUTHORIZATION OF CH2M HILL.
©CH2M HILL

DESIGN SCALE
BAR IS ONE INCH ON ORIGINAL DRAWING.
0 1"
IF NOT ONE INCH ON THIS SHEET, ADJUST SCALES ACCORDINGLY.

CITY OF WENATCHEE, WASHINGTON
WASTEWATER TREATMENT PLANT IMPROVEMENTS

HEADWORKS
LIGHTING PLAN

DWG NO. 400-E-6
DATE NOV. 1990
PROJ. NO. SEA24579.N1

DRAWN BY: CM BLACKWELL DESIGNED BY: TB JOYCE
DGN NAME: O:/PROJ2/WENATCHE/WE400E-F.DGN

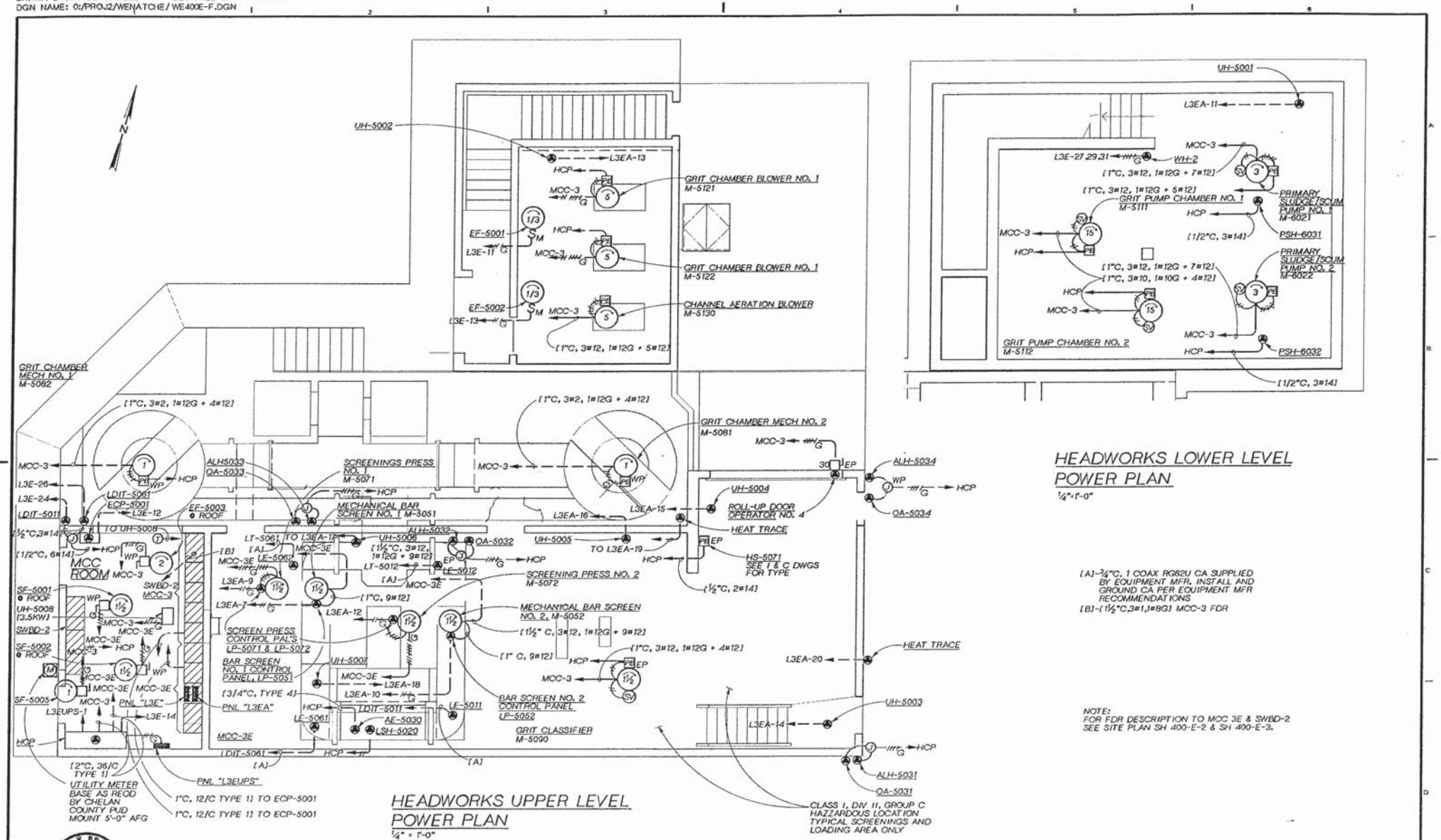

DSGN T B JOYCE					
DR CM BLACKWELL					
CHK C. BRACKETT					
APVD K HOOD	NO.	DATE	REVISION	BY	APVD

CH2M HILL

REUSE OF DOCUMENTS
THIS DOCUMENT, AND THE IDEAS AND DESIGNS INCORPORATED HEREIN, AS AN INSTRUMENT OF PROFESSIONAL SERVICE, IS THE PROPERTY OF CH2M HILL AND IS NOT TO BE USED, IN WHOLE OR IN PART, FOR ANY OTHER PROJECT WITHOUT THE WRITTEN AUTHORIZATION OF CH2M HILL.

CH2M HILL

VERIFY SCALE
BAR IS ONE INCH ON ORIGINAL DRAWING.
0 1"
IF NOT ONE INCH ON THIS SHEET, ADJUST SCALES ACCORDINGLY.

CITY OF WENATCHEE, WASHINGTON
WASTEWATER TREATMENT PLANT IMPROVEMENTS

ELECTRICAL
HEADWORKS POWER PLAN

DWG NO. 400-E-7
DATE NOV. 1990
PROJ NO. SEA24579.N1

DRAWN BY: J. BROWN DESIGNED BY: T. JOYCE
DGN NAME: 0:/PROJ2/WENATCHE/WE400E-G

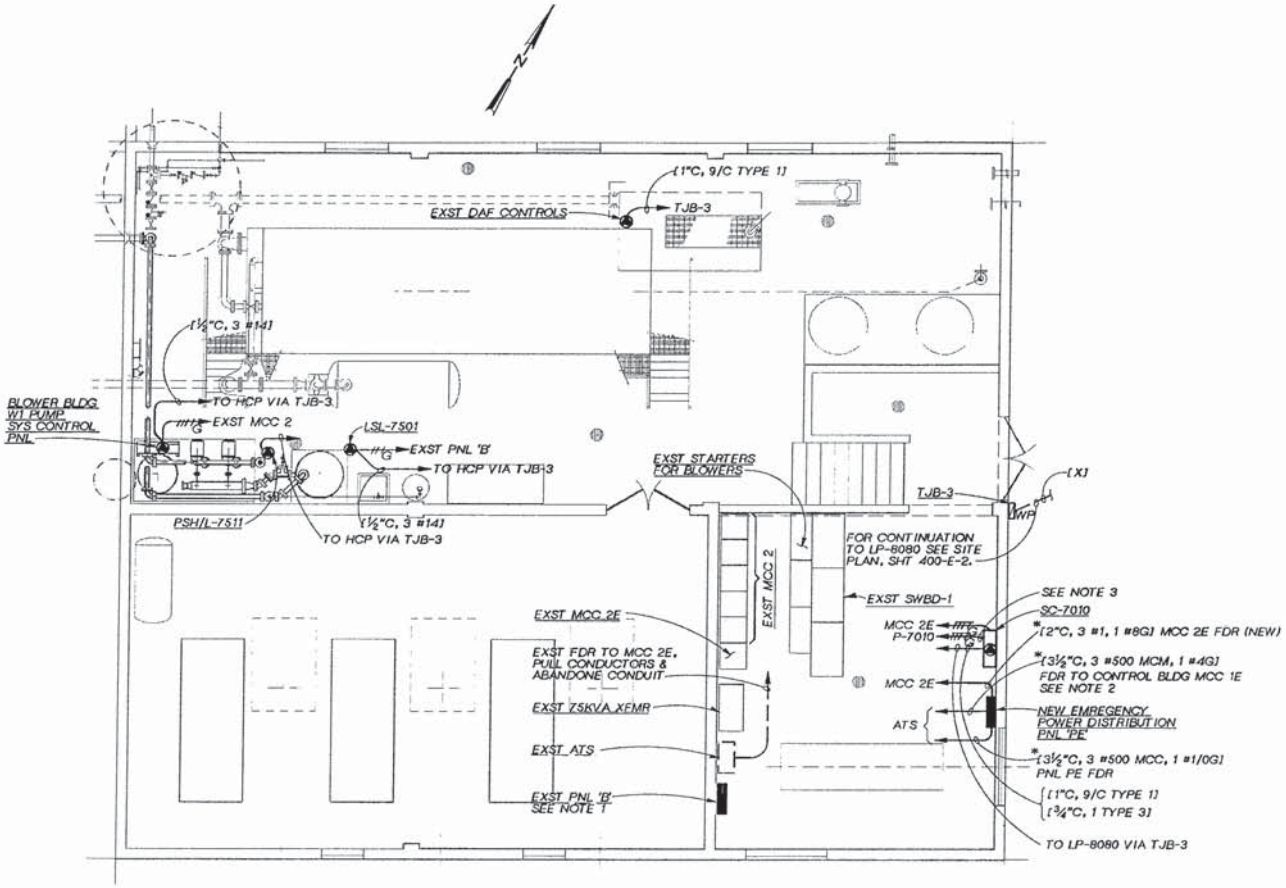

MODIFICATIONS TO EXST BLOWER BUILDING POWER PLAN

¼"=1'-0"

* CONNECT PER DISTRIBUTION SYSTEM ONE LINE DIAGRAM, SHT 400-E-3.

NOTES:

1. ADD 20A SINGLE POLE CB FOR LSL-7501 TO EXST SPACE. CB TYPE SHALL BE SAME AS EXST.
2. INTERCEPT EXST 500 MCM 3Ø FDR FROM EXST ATS TO EXST MCC 1E. ROUTE FDR TO PNL PE AND CONNECT AS SHOWN ON DISTRIBUTION SYSTEM ONE LINE DIAGRAM.
3. ROUTE CIRCUITS TO WAS PUMP (P-7010) VIA MCC 2 AND EXST RACEWAY. SEE SHT 400-E-14

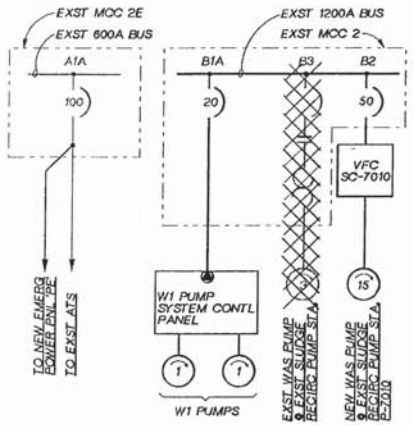

ONE-LINE LEGEND

- EXISTING
- NEW
- PULL CONDUCTORS AND ABANDON CONDUIT

MODIFICATIONS TO MCC 2 & MCC 2E - ONE-LINE DIAGRAM

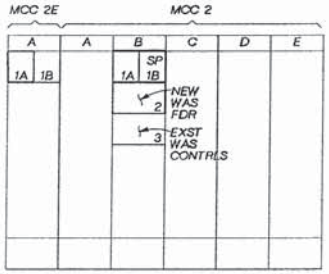

NOTE:
PULL CONDUCTORS FOR NEW WAS PUMP IN EXISTING WAS PUMP CONDUIT. SEE DWG 400-E-14.

MODIFICATIONS TO MCC 2 & MCC 2E - ELEVATION

½"=1'-0"

CARL V. BRACKETT — STATE OF WASHINGTON — REGISTERED PROFESSIONAL ENGINEER

CH2M HILL

DSGN	TB JOYCE
DR	J BROWN
CHK	C. BRACKETT
APVD	K HOOD

NO.	DATE	REVISION	BY	APVD

REUSE OF DOCUMENTS
THIS DOCUMENT, AND THE IDEAS AND DESIGNS INCORPORATED HEREIN, AS AN INSTRUMENT OF PROFESSIONAL SERVICE, IS THE PROPERTY OF CH2M HILL AND IS NOT TO BE USED, IN WHOLE OR IN PART, FOR ANY OTHER PROJECT WITHOUT THE WRITTEN AUTHORIZATION OF CH2M HILL.
©CH2M HILL

VERIFY SCALE
BAR IS ONE INCH ON ORIGINAL DRAWING.
0 1"
IF NOT ONE INCH ON THIS SHEET, ADJUST SCALES ACCORDINGLY.

CITY OF WENATCHEE, WASHINGTON
WASTEWATER TREATMENT PLANT IMPROVEMENTS

ELECTRICAL
BLOWER BLDG
ELECTRICAL MODIFICATIONS

DWG NO. 400-E-8
DATE NOV. 1990
PROJ. NO. SEA24579.N1

DATE: 11/8/90 CMB
DRAWN BY: CM BLACKWELL DESIGNED BY: TB JOYCE
DGN NAME: O:/PROJ2/WENATCHE/ WE400E-N.DGN

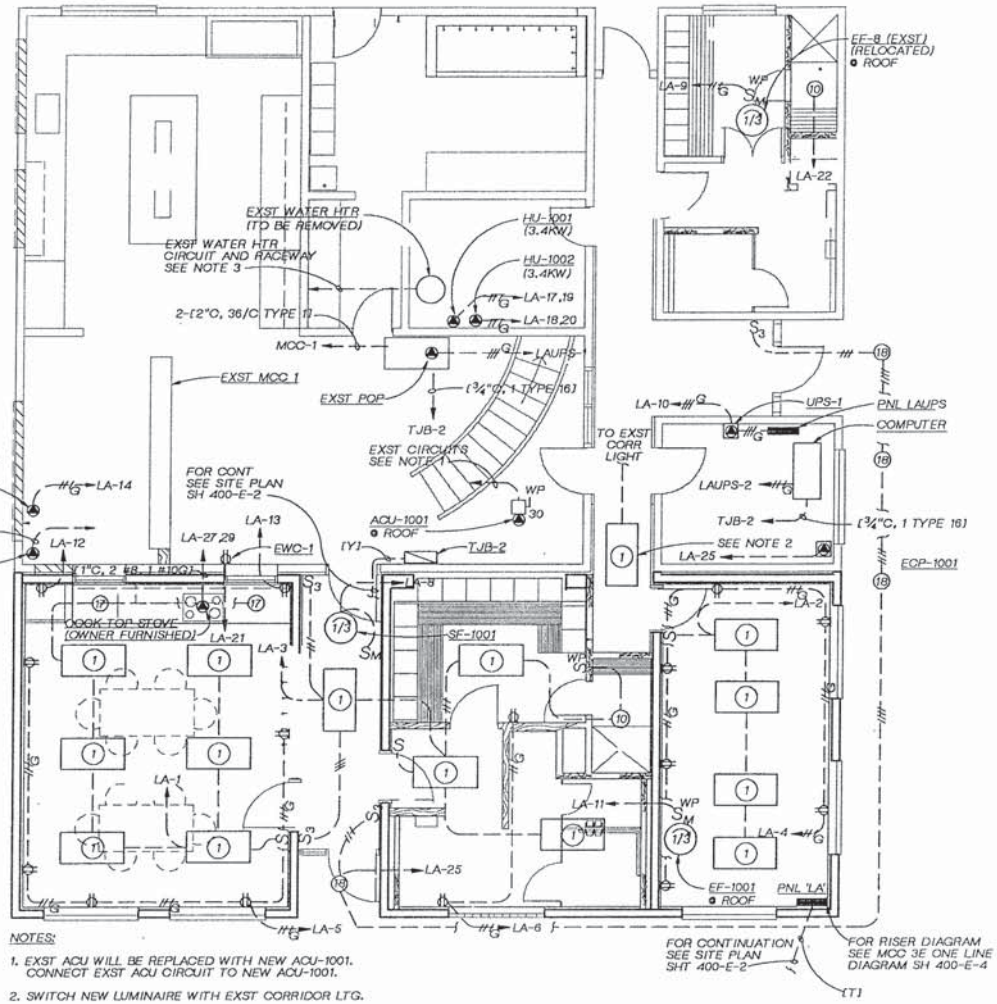

NOTES:

1. EXST ACU WILL BE REPLACED WITH NEW ACU-1001. CONNECT EXST ACU CIRCUIT TO NEW ACU-1001.
2. SWITCH NEW LUMINAIRE WITH EXST CORRIDOR LTG.
3. INTERCEPT EXST FEEDER TO EXST WATER HEATER, USE EXST FEEDER TO SUPPLY 240V, 1 ϕ POWER TO NEW WATER HEAT (WH-1).

ADMINISTRATION BLDG-ELECTRICAL PLAN

1/4"=1'-0"

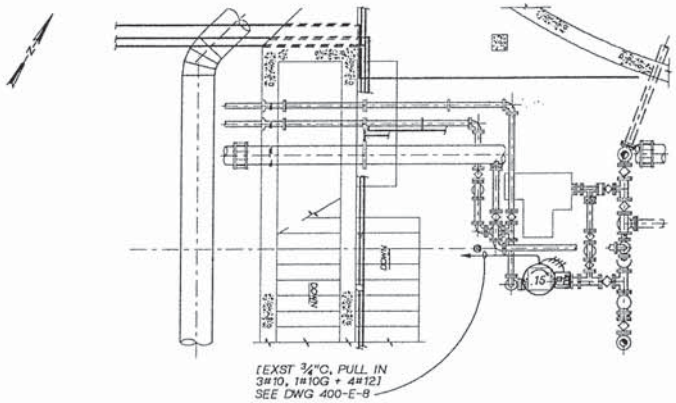

MODIFICATIONS TO EXISTING SLUDGE RECIRCULATION PUMP STATION-ELECTRICAL PLAN

3/8"=1'-0"

NOTE:
ROUTE NEW WAS. PUMP MOTOR CIRCUIT TO SC-7010 VIA EXST MCC-2 LOCATED IN BLOWER BLDG. SEE SH 400-E-7.

CARL V. BRACKETT — STATE OF WASHINGTON — REGISTERED PROFESSIONAL ENGINEER

CH2M HILL

DSGN	TB JOYCE
DR	CM BLACKWELL
CHK	C BRACKETT
APVD	K HOOD

NO.	DATE	REVISION	BY	APVD

REUSE OF DOCUMENTS
THIS DOCUMENT, AND THE IDEAS AND DESIGNS INCORPORATED HEREIN, AS AN INSTRUMENT OF PROFESSIONAL SERVICE, IS THE PROPERTY OF CH2M HILL AND IS NOT TO BE USED, IN WHOLE OR IN PART, FOR ANY OTHER PROJECT WITHOUT THE WRITTEN AUTHORIZATION OF CH2M HILL.
© CH2M HILL

BAR IS ONE INCH ON ORIGINAL DRAWING. 0 1"
IF NOT ONE INCH ON THIS SHEET, ADJUST SCALES ACCORDINGLY.

CITY OF WENATCHEE, WASHINGTON
WASTEWATER TREATMENT PLANT IMPROVEMENTS

ELECTRICAL
ADMINISTRATION BULIDING AND SLUDGE RECIRCULATION P.S. ELECTRICAL PLAN

DWG NO. 400-E-9
DATE NOV. 1990
PROJ NO. SEA24579.N1

DRAWN BY: CM BLACKWELL DESIGNED BY: TB JOYCE
DGN NAME: O:/PROJ2/WENATCHE/WE400E-H.DGN

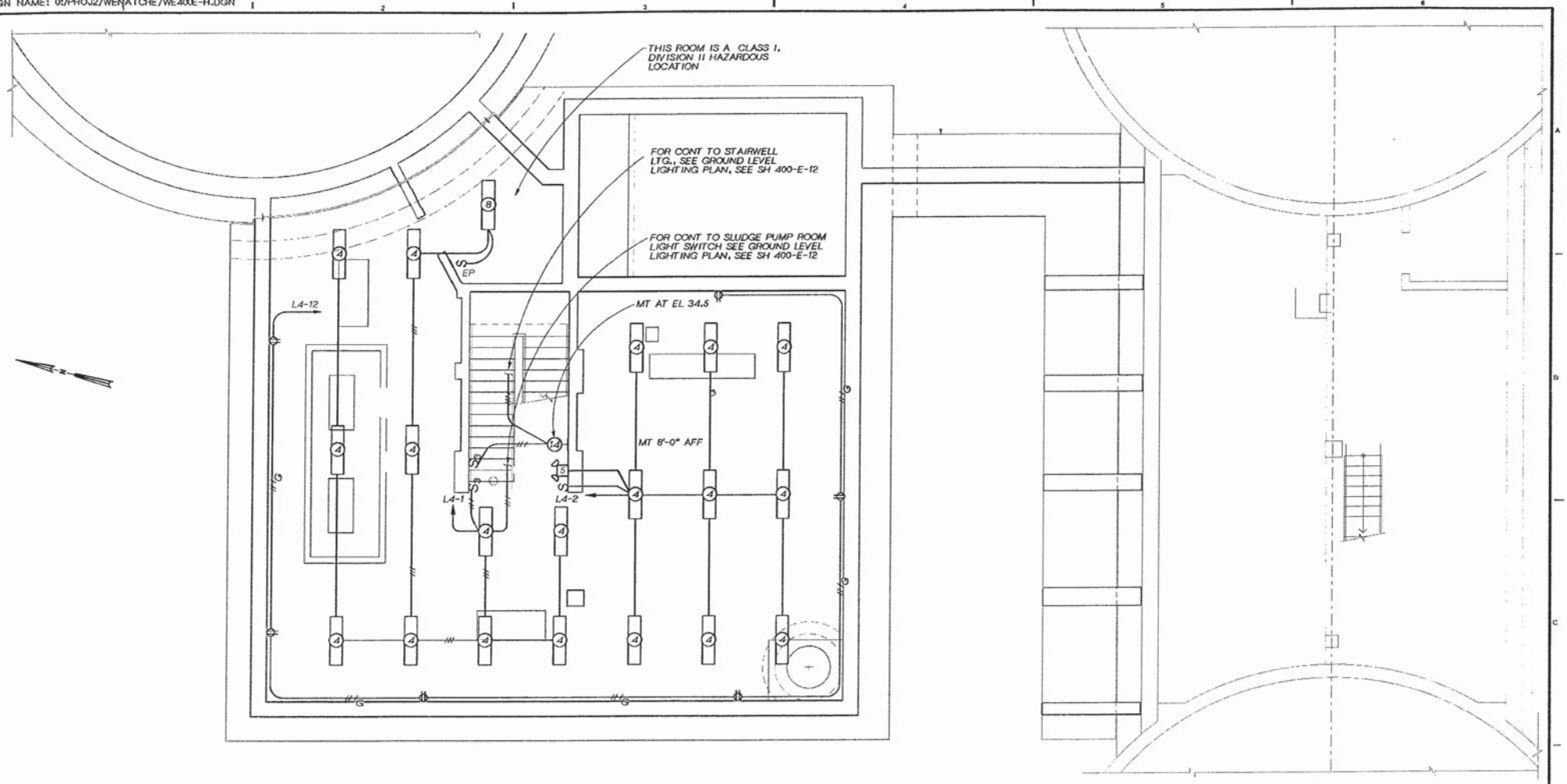

SOLIDS HANDLING FACILITY
LOWER LEVEL LIGHTING

PLAN
1/4" = 1'-0"

DSGN TB JOYCE					
DR CM BLACKWELL					
CHK C. BRACKETT					
APVD K HOOD	NO.	DATE	REVISION	BY	APVD

REUSE OF DOCUMENTS
THIS DOCUMENT, AND THE IDEAS AND DESIGNS INCORPORATED HEREIN, AS AN INSTRUMENT OF PROFESSIONAL SERVICE, IS THE PROPERTY OF CH2M HILL AND IS NOT TO BE USED, IN WHOLE OR IN PART, FOR ANY OTHER PROJECT WITHOUT THE WRITTEN AUTHORIZATION OF CH2M HILL.
©CH2M HILL

VERIFY SCALE
BAR IS ONE INCH ON ORIGINAL DRAWING.
0 1"
IF NOT ONE INCH ON THIS SHEET, ADJUST SCALES ACCORDINGLY.

CITY OF WENATCHEE, WASHINGTON
WASTEWATER TREATMENT PLANT IMPROVEMENTS

ELECTRICAL
SOLIDS HANDLING FACILITY - LOWER LEVEL LIGHTING PLAN

DWG NO. 400-E-10
DATE NOV. 1990
PROJ. NO. SEA24579.N1

DATE: 11-8-90 DLC
DRAWN BY: C. BLACKWELL DESIGNED BY: T. JOYCE
DGN NAME: O:/PROJ2/WENATCHE/WE400E-1.DWG

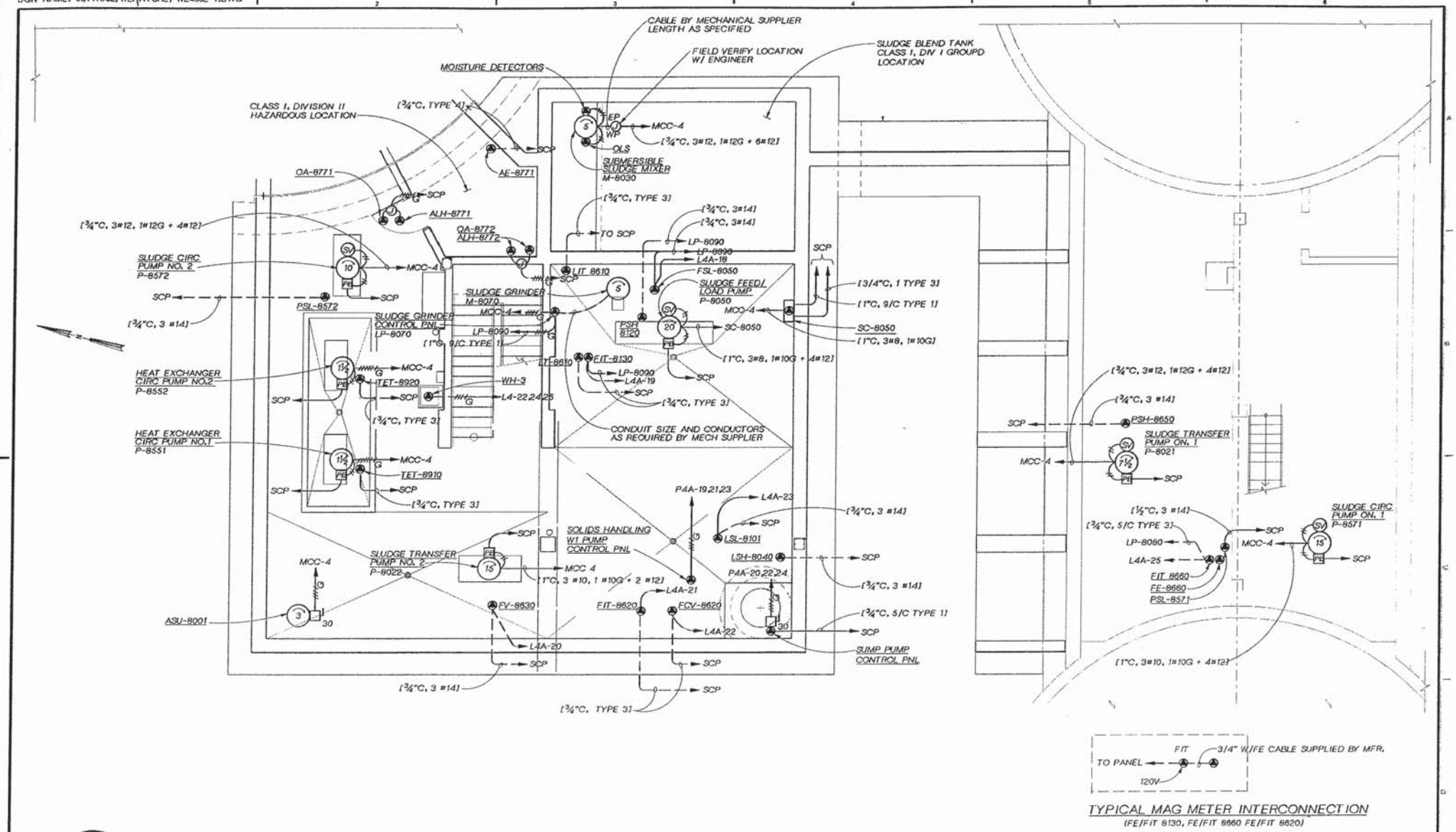

TYPICAL MAG METER INTERCONNECTION
(FE/FIT 8130, FE/FIT 8660 FE/FIT 8620)

DSGN T. JOYCE						
DR C. BLACKWELL						
CHK BRACKETT						
APVD K HOOD	NO.	DATE	REVISION	BY	APVD	

CH2M HILL

REUSE OF DOCUMENTS
THIS DOCUMENT, AND THE IDEAS AND DESIGNS INCORPORATED HEREIN, AS AN INSTRUMENT OF PROFESSIONAL SERVICE, IS THE PROPERTY OF CH2M HILL AND IS NOT TO BE USED, IN WHOLE OR IN PART, FOR ANY OTHER PROJECT WITHOUT THE WRITTEN AUTHORIZATION OF CH2M HILL.
©CH2M HILL

DESIGN SCALE
BAR IS ONE INCH ON ORIGINAL DRAWING.
0 1"
IF NOT ONE INCH ON THIS SHEET, ADJUST SCALES ACCORDINGLY.

CITY OF WENATCHEE, WASHINGTON
WASTEWATER TREATMENT PLANT IMPROVEMENTS

ELECTRICAL
SOLIDS HANDLING FACILITY
LOWER LEVEL POWER PLAN

DWG NO. 400-E-11
DATE NOV. 1990
PROJ NO. SEA24579.N1

DATE: 11/07/90 BIC
DRAWN BY: J. BROWN DESIGNED BY: T. JOYCE
DGN NAME: O:/PROJ2/WENATCHE/ WE400E-J.DGN

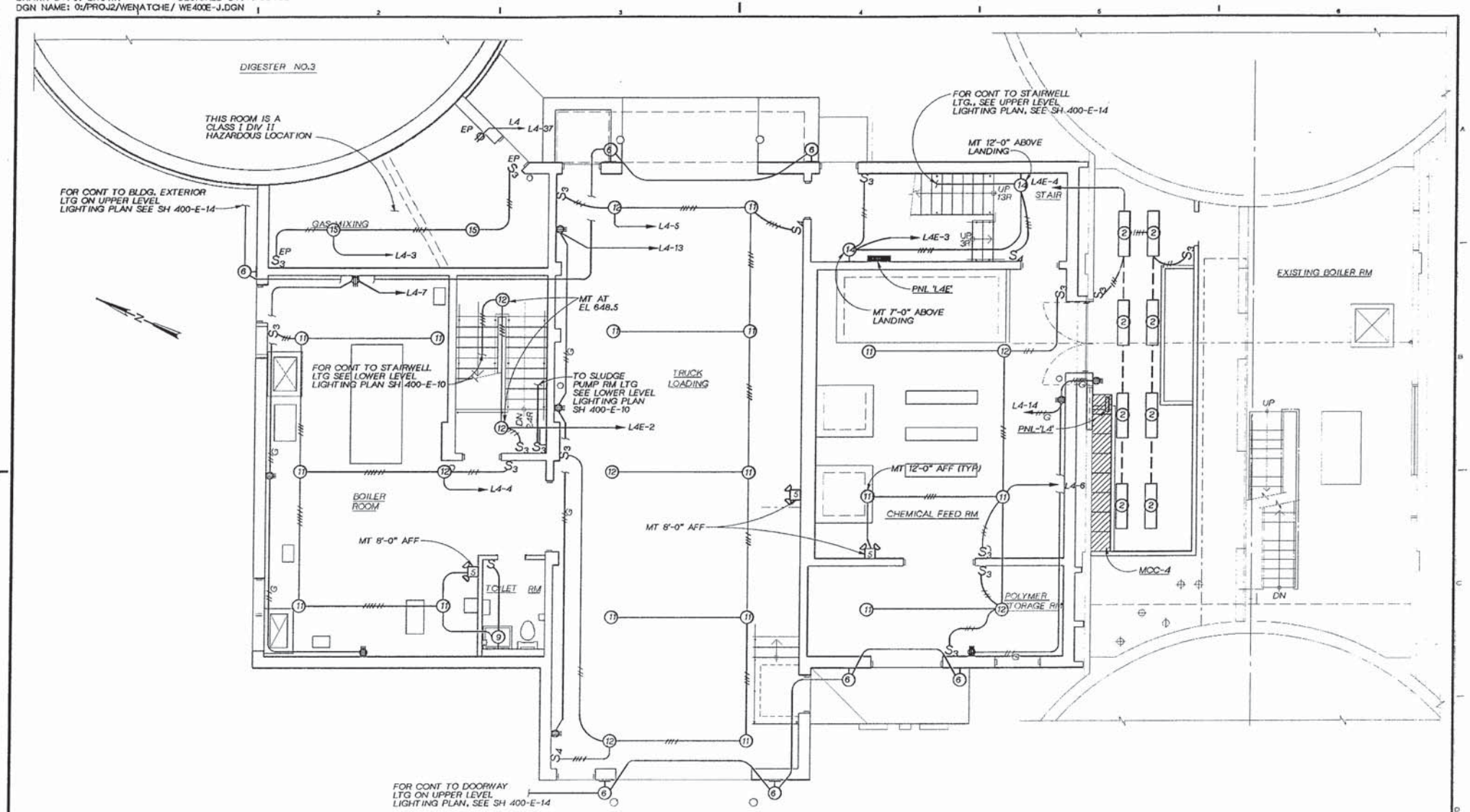

GROUND LEVEL PLAN

1¼" = 1'-0"

DSGN TB JOYCE					
DR J BROWN					
CHK C. BRACKETT					
APVD K HOOD	NO.	DATE	REVISION	BY	APVD

REUSE OF DOCUMENTS
THIS DOCUMENT, AND THE IDEAS AND DESIGNS INCORPORATED HEREIN, AS AN INSTRUMENT OF PROFESSIONAL SERVICE, IS THE PROPERTY OF CH2M HILL AND IS NOT TO BE USED, IN WHOLE OR IN PART, FOR ANY OTHER PROJECT WITHOUT THE WRITTEN AUTHORIZATION OF CH2M HILL.
©CH2M HILL

DESIGN SCALE
BAR IS ONE INCH ON ORIGINAL DRAWING.
0 1"
IF NOT ONE INCH ON THIS SHEET, ADJUST SCALES ACCORDINGLY.

CITY OF WENATCHEE, WASHINGTON
WASTEWATER TREATMENT PLANT IMPROVEMENTS

ELECTRICAL
SOLIDS HANDLING FACILITY
GROUND LEVEL PLAN

DWG NO. 400-E-12
DATE NOV. 1990
PROJ NO. SEA24579.N1

DATE: 11-8-90 DLC
DRAWN BY: J. BROWN DESIGNED BY: JB JOYCE
DGN NAME: O:/PROJ2/WENATCHE/WE400E-K.DGN

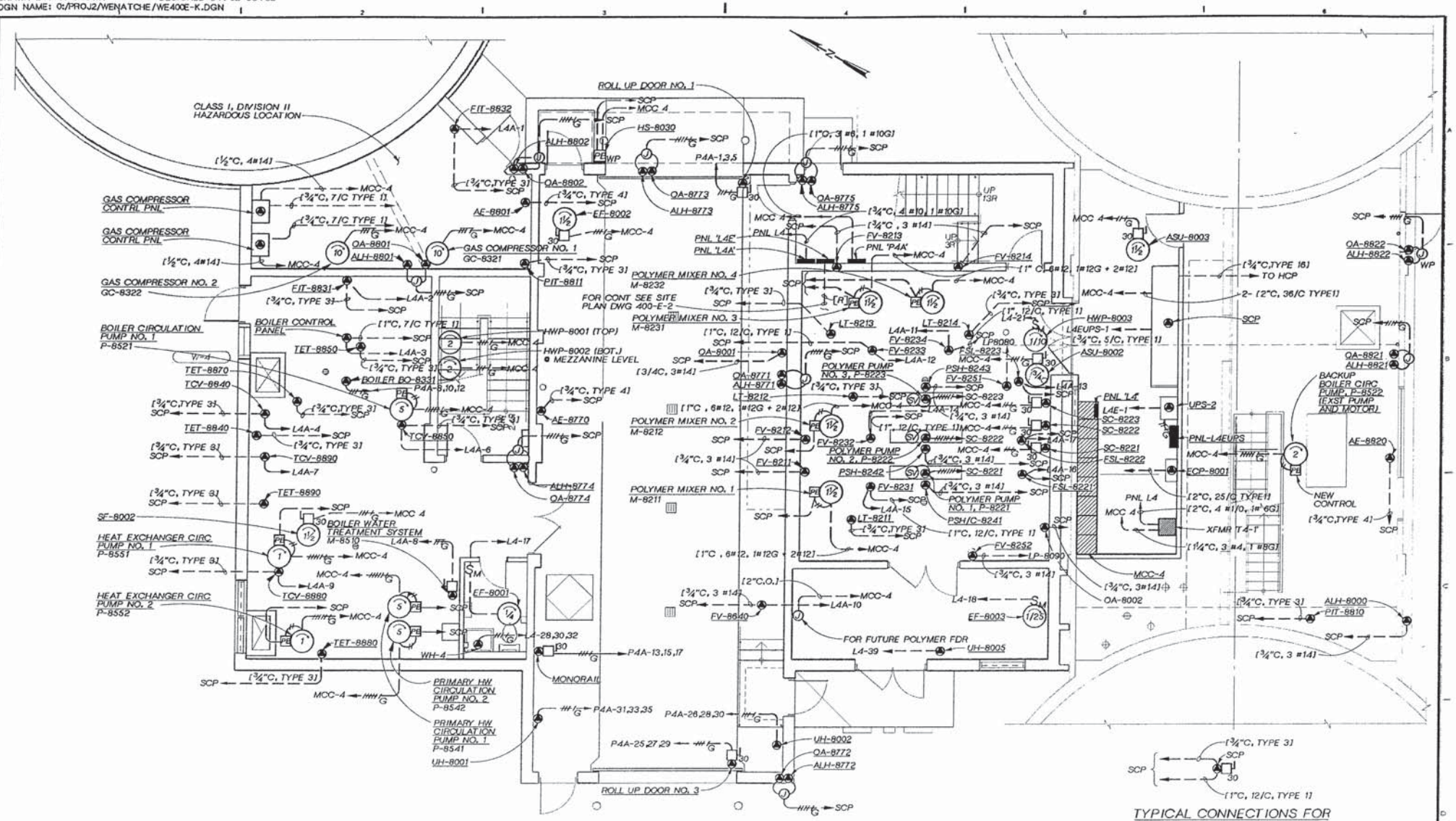

GROUND LEVEL POWER PLAN

1/4"=1'-0"

TYPICAL CONNECTIONS FOR (SC-8221, SC-8222, SC-8223)

DSGN JOYCE/CONLEY						
DR CM BLACKWELL						
CHK C. BRACKETT						
APVD K HOOD	NO.	DATE	REVISION	BY	APVD	

REUSE OF DOCUMENTS
THIS DOCUMENT, AND THE IDEAS AND DESIGNS INCORPORATED HEREIN, AS AN INSTRUMENT OF PROFESSIONAL SERVICE, IS THE PROPERTY OF CH2M HILL AND IS NOT TO BE USED, IN WHOLE OR IN PART, FOR ANY OTHER PROJECT WITHOUT THE WRITTEN AUTHORIZATION OF CH2M HILL.
©CH2M HILL

ORIGINAL SCALE: BAR IS ONE INCH ON ORIGINAL DRAWING. 0 1" IF NOT ONE INCH ON THIS SHEET, ADJUST SCALES ACCORDINGLY.

CITY OF WENATCHEE, WASHINGTON
WASTEWATER TREATMENT PLANT IMPROVEMENTS

ELECTRICAL
SOLIDS HANDLING FACILITY
GROUND LEVEL POWER PLAN

DWG NO. 400-E-13
DATE NOV. 1990
PROJ. NO. SEA24579.N1

DATE: 11/07/90 BIC
DRAWN BY: B. CARR DESIGNED BY: TB JOYCE
DGN NAME: O:/PROJ2/WENATCHE/ WE400E-L.DGN

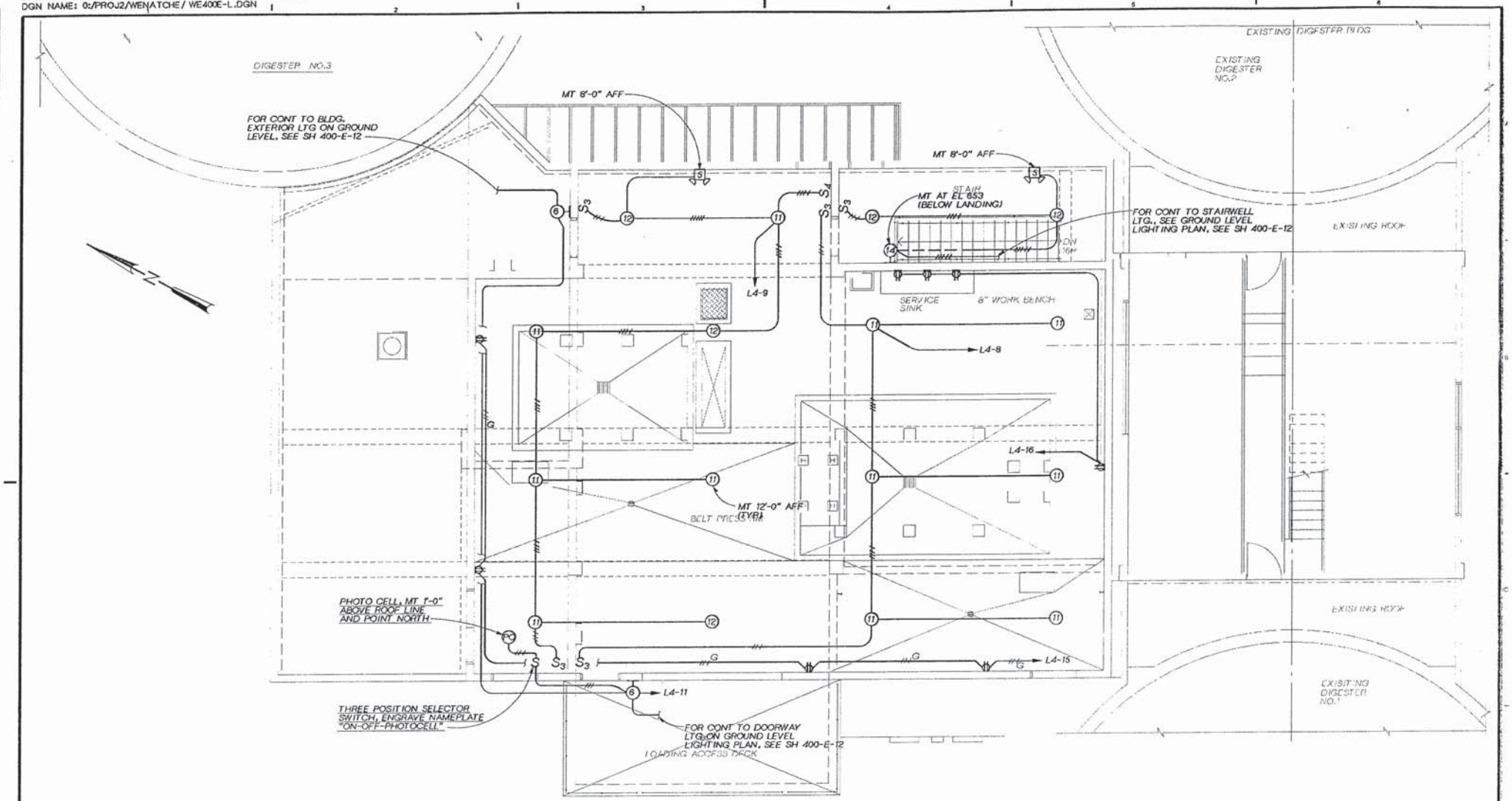

DSGN T JOYCE							
DR C BLACKWELL							
CHK C. BRACKETT							
APVD K HOOD	NO.	DATE	REVISION	BY	APVD		

CARL V. BRACKETT, STATE OF WASHINGTON, REGISTERED PROFESSIONAL ENGINEER

CH2M HILL

REUSE OF DOCUMENTS
THIS DOCUMENT, AND THE IDEAS AND DESIGNS INCORPORATED HEREIN, AS AN INSTRUMENT OF PROFESSIONAL SERVICE, IS THE PROPERTY OF CH2M HILL AND IS NOT TO BE USED, IN WHOLE OR IN PART, FOR ANY OTHER PROJECT WITHOUT THE WRITTEN AUTHORIZATION OF CH2M HILL.
©CH2M HILL

LEGEND SCALE
BAR IS ONE INCH ON ORIGINAL DRAWING.
0 1"
IF NOT ONE INCH ON THIS SHEET, ADJUST SCALES ACCORDINGLY.

CITY OF WENATCHEE, WASHINGTON
WASTEWATER TREATMENT PLANT IMPROVEMENTS

ELECTRICAL
SOLIDS HANDLING FACILITY - UPPER LEVEL LIGHTING PLAN

DWG NO. 400-E-14
DATE NOV. 1990
PROJ. NO. SEA24579.N1

DATE: 11-8-90 DLC
DRAWN BY: CM BLACKWELL DESIGNED BY: TB JOYCE
DGN NAME: O:/PROJ2/WENATCHE/WE400E-M.DGN

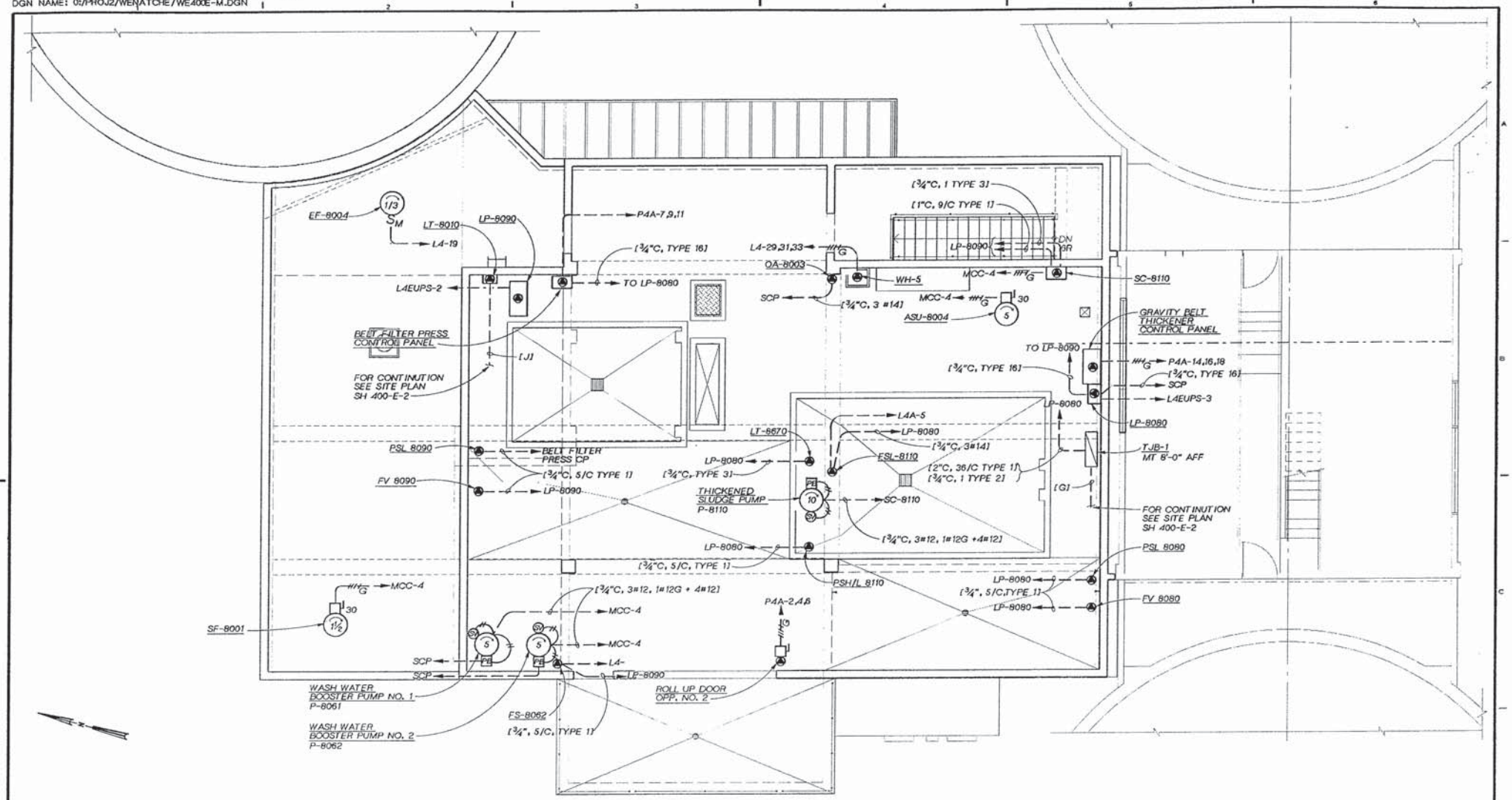

SOLIDS HANDLING FACILITY UPPER LEVEL POWER

PLAN

¼" = 1'-0"

DSGN TB JOYCE					
DR CM BLACKWELL					
CHK C BRACKETT					
APVD K HOOD	NO.	DATE	REVISION	BY	APVD

CH2M HILL

REUSE OF DOCUMENTS
THIS DOCUMENT, AND THE IDEAS AND DESIGNS INCORPORATED HEREIN, AS AN INSTRUMENT OF PROFESSIONAL SERVICE, IS THE PROPERTY OF CH2M HILL AND IS NOT TO BE USED, IN WHOLE OR IN PART, FOR ANY OTHER PROJECT WITHOUT THE WRITTEN AUTHORIZATION OF CH2M HILL.
©CH2M HILL

VERIFY SCALE
BAR IS ONE INCH ON ORIGINAL DRAWING.
0 1"
IF NOT ONE INCH ON THIS SHEET, ADJUST SCALES ACCORDINGLY.

CITY OF WENATCHEE, WASHINGTON
WASTEWATER TREATMENT PLANT IMPROVEMENTS

ELECTRICAL
SOLIDS HANDLING FACILITY UPPER LEVEL POWER PLAN

DWG NO. 400-E-15
DATE NOV. 1990
PROJ. NO. SEA24579.N1

DATE: 11-8-90 DLC
DRAWN BY: CM BLACKWELL DESIGNED BY: TB JOYCE
DGN NAME: 0:/PROJ2/WENATCHE/ WE400E-Q.DGN

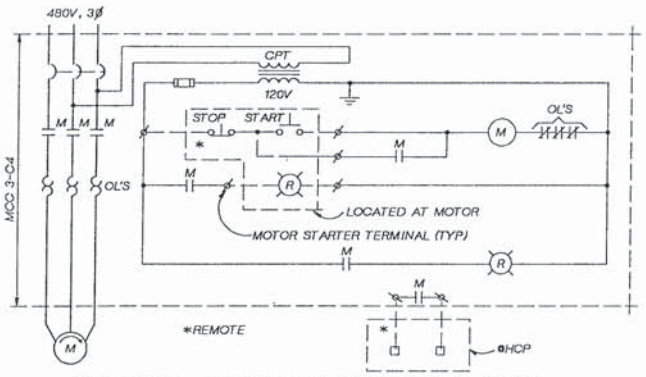

CHANNEL AERATION BLOWER(B-5130)

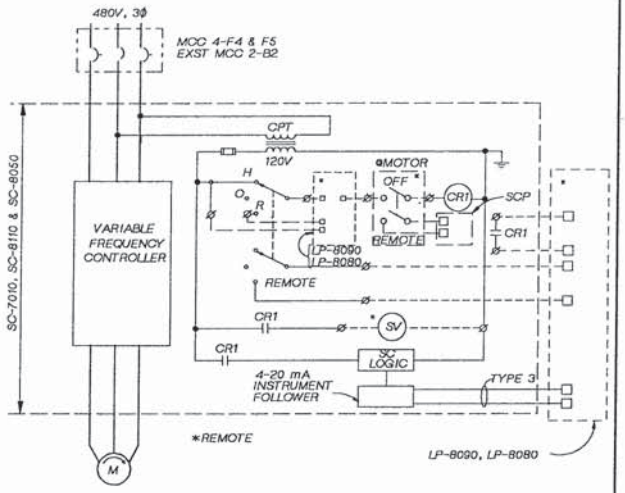

SLUDGE FEED/LOAD PUMP(P-8050)
THICKENED SLUDGE PUMP(P-8110)
WAS PUMP (P-7010)

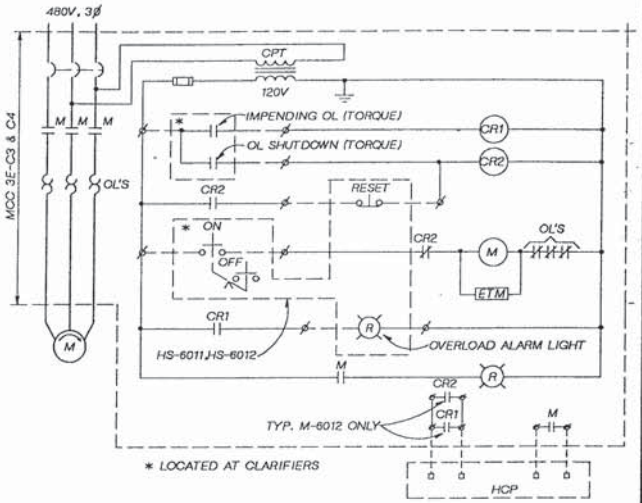

PRI. CLARIFIER MECH.(M-6011 & M-6012)

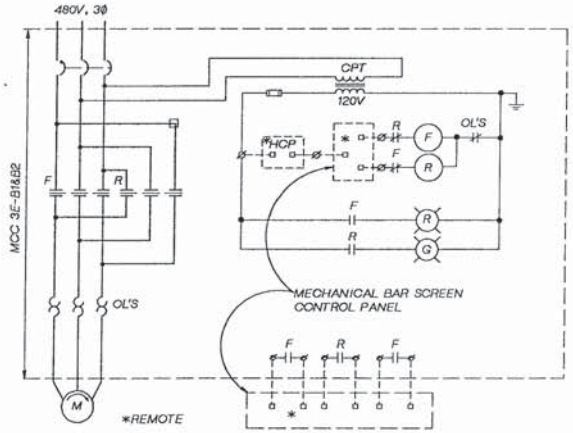

MECHANICAL BAR SCREENS(M-5051& M-5052)

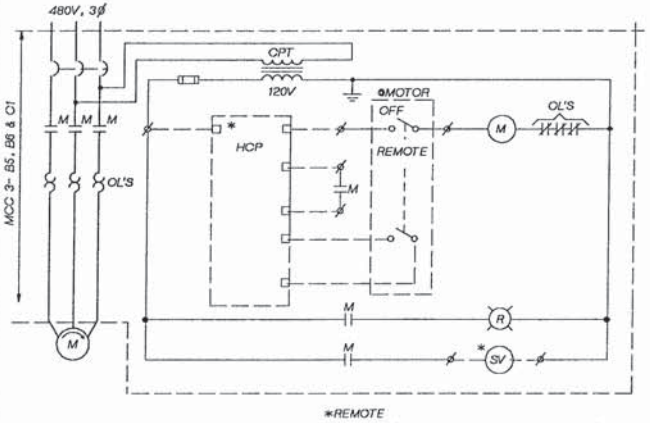

GRIT CHAMBER PUMPS(P-5111 & P-5112)
GRIT CLASSIFIER(M-5090)

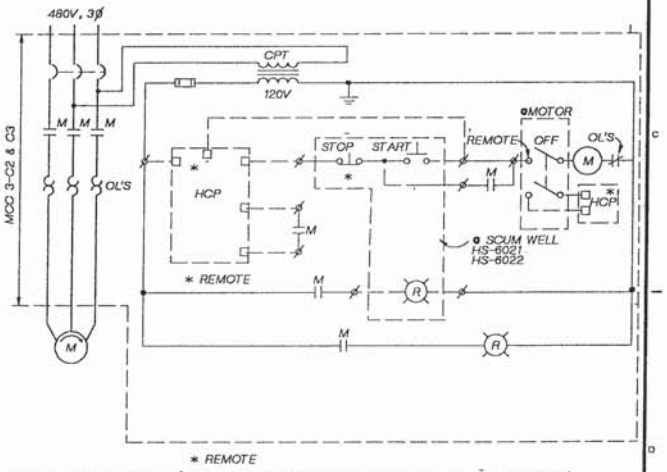

PRI. SLUDGE/SCUM PUMPS(P-6021 & P-6022)

DSGN T.B. JOYCE					
DR T.B. JOYCE					
CHK C BRACKETT					
APVD K HOOD	NO.	DATE	REVISION	BY	APVD

CARL V. BRACKETT STATE OF WASHINGTON PROFESSIONAL ENGINEER

CH2M HILL

REUSE OF DOCUMENTS
THIS DOCUMENT, AND THE IDEAS AND DESIGNS INCORPORATED HEREIN, AS AN INSTRUMENT OF PROFESSIONAL SERVICE, IS THE PROPERTY OF CH2M HILL AND IS NOT TO BE USED, IN WHOLE OR IN PART, FOR ANY OTHER PROJECT WITHOUT THE WRITTEN AUTHORIZATION OF CH2M HILL.
©CH2M HILL

BAR IS ONE INCH ON ORIGINAL DRAWING. 0 1"
IF NOT ONE INCH ON THIS SHEET, ADJUST SCALES ACCORDINGLY.

CITY OF WENATCHEE, WASHINGTON
WASTEWATER TREATMENT PLANT IMPROVEMENTS

ELECTRICAL
ELEMENTARY DIAGRAMS

DWG NO. 400-E-16
DATE NOV. 1990
PROJ NO. SEA24579.N1

DATE: 11-8-90 DLC
DRAWN BY: CM BLACKWELL DESIGNED BY: TB JOYCE
DGN NAME: O:/PROJ2/WENATCHE/WE400E-R.DGN

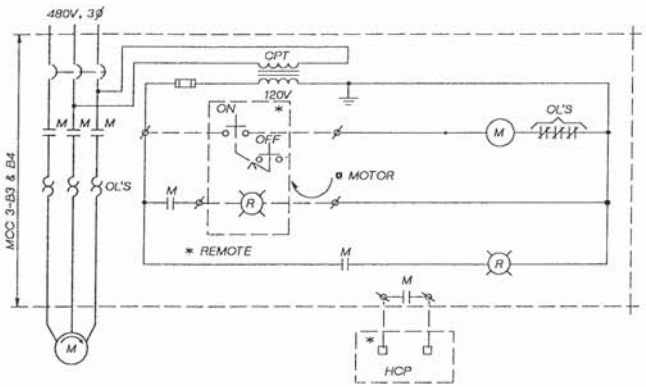

GRIT CHAMBER MECH.'S(M-5081 & 5082)

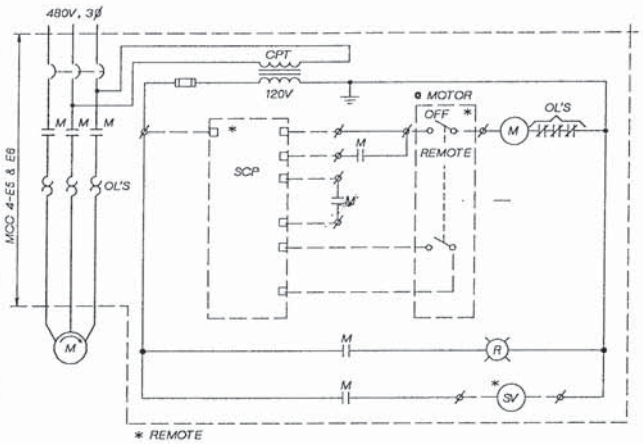

SLUDGE CIRC. PUMPS(P-8571 & P-8572)

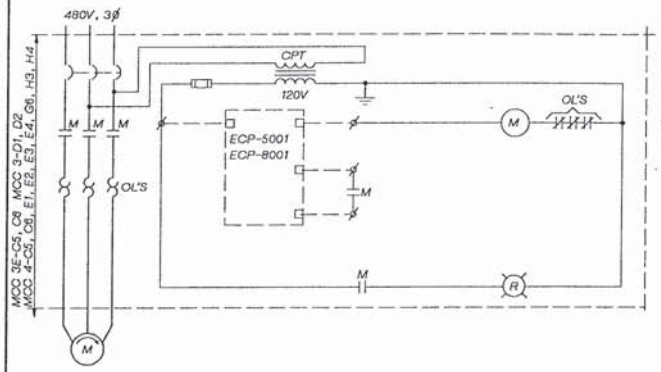

EF-5003, EF-8002
SF-5001, SF-5002, SF-5003, SF-8001, SF-8002
ASU-8001, ASU-8002, ASU-8003, ASU-8004
HWP-8001, HWP-8002

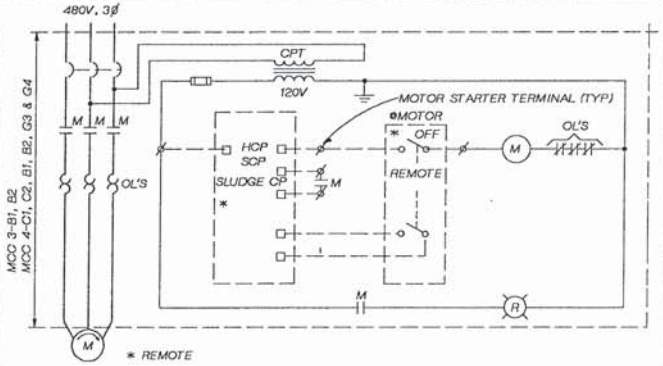

GRIT CHAMBER BLOWERS(B-5121 & B-5122)
HEAT EXCH. CIRC. PUMPS(P-8551 & P-8552)
BOILER CIRC. PUMPS(P-8521 & P-8522)
PRI. HW CIRC. PUMPS(P-8541 & P-8542)

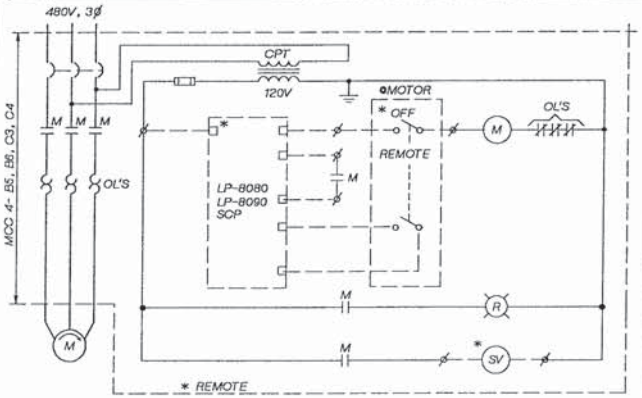

WASHWATER BOOSTER PUMPS(P-8061& P-8062)
SLUDGE TRANSFER PUMPS(P-8021 & P-8022)

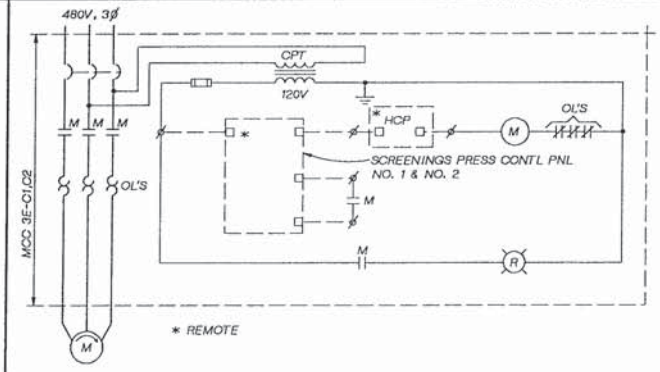

SCREENINGS PRESS(M-5071 & M-5072)

CARL V. BRACKETT, STATE OF WASHINGTON, REGISTERED PROFESSIONAL ENGINEER

CH2M HILL

DSGN	T.B. JOYCE
DR	TOM JOYCE
CHK	C BRACKETT
APVD	K HOOD

NO.	DATE	REVISION	BY	APVD

REUSE OF DOCUMENTS
THIS DOCUMENT, AND THE IDEAS AND DESIGNS INCORPORATED HEREIN, AS AN INSTRUMENT OF PROFESSIONAL SERVICE, IS THE PROPERTY OF CH2M HILL AND IS NOT TO BE USED, IN WHOLE OR IN PART, FOR ANY OTHER PROJECT WITHOUT THE WRITTEN AUTHORIZATION OF CH2M HILL.
©CH2M HILL

BAR IS ONE INCH ON ORIGINAL DRAWING. 0 1"
IF NOT ONE INCH ON THIS SHEET, ADJUST SCALES ACCORDINGLY.

CITY OF WENATCHEE, WASHINGTON
WASTEWATER TREATMENT PLANT IMPROVEMENTS

ELECTRICAL
ELEMENTARY DIAGRAMS

DWG NO. 400-E-17
DATE NOV. 1990
PROJ NO. SEA24579.N1

DATE: 11-8-90 DLC
DRAWN BY: CM BLACKWELL DESIGNED BY: TB JOYCE
DGN NAME: 0:/PROJ2/WENATCHE/WE400E-W.DGN

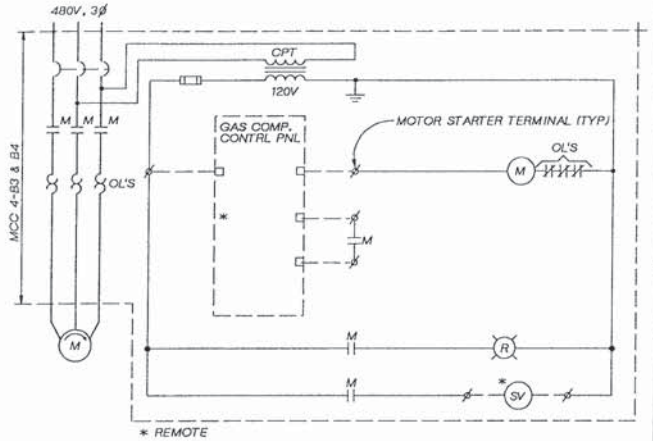

GAS COMPRESSORS (GC-8321, GC-8322)

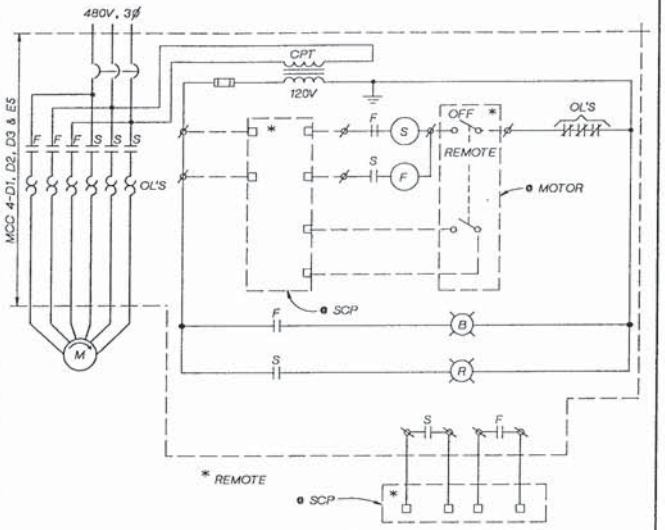

POLYMER MIXERS (M-8211, M-8212, M-8213 & M-8214)

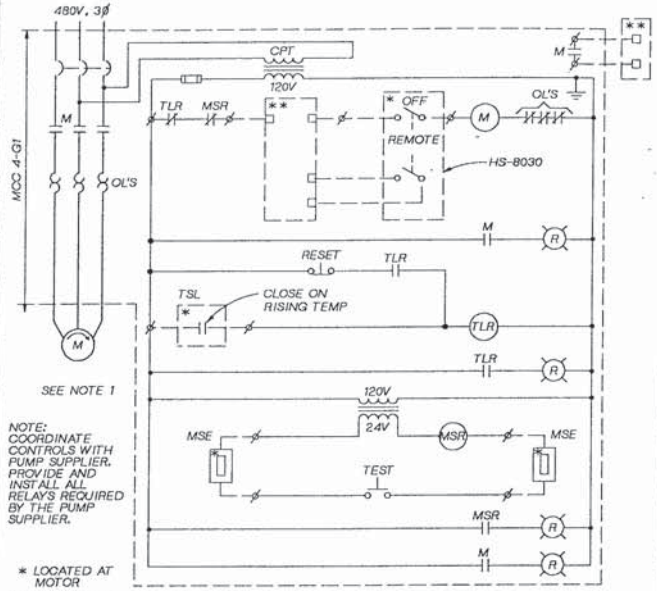

SLUDGE MIXER (M-8030)

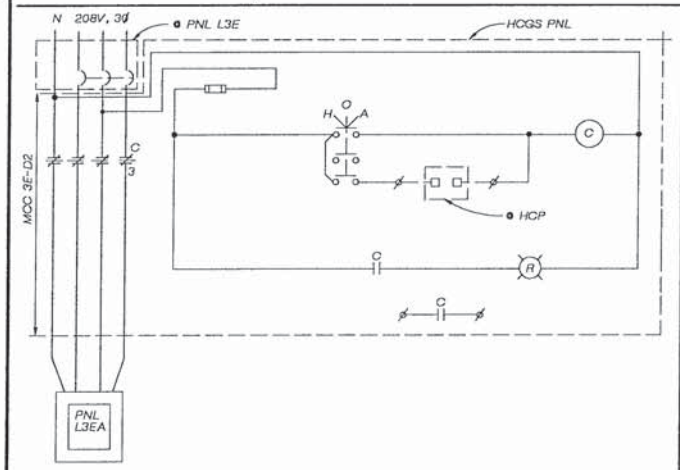

HCGS CONTACTOR PANEL

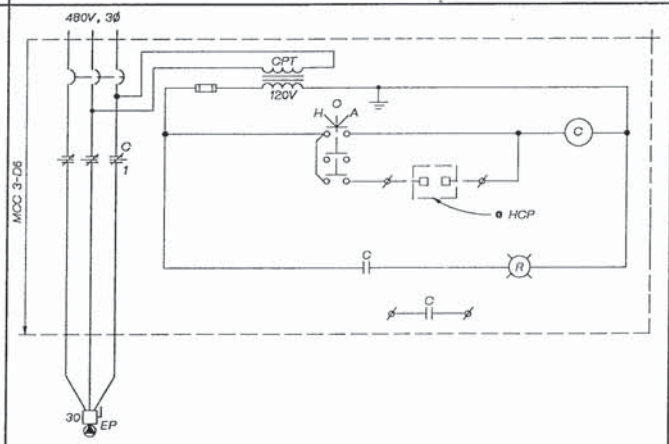

ROLL UP DOOR OPR NO. 4

DSGN	T JOYCE				
DR	T JOYCE				
CHK	C BRACKETT				
APVD	K HOOD	NO.	DATE	REVISION	BY	APVD

REUSE OF DOCUMENTS
THIS DOCUMENT, AND THE IDEAS AND DESIGNS INCORPORATED HEREIN, AS AN INSTRUMENT OF PROFESSIONAL SERVICE, IS THE PROPERTY OF CH2M HILL AND IS NOT TO BE USED, IN WHOLE OR IN PART, FOR ANY OTHER PROJECT WITHOUT THE WRITTEN AUTHORIZATION OF CH2M HILL.
©CH2M HILL

BAR IS ONE INCH ON ORIGINAL DRAWING. 0 1"
IF NOT ONE INCH ON THIS SHEET, ADJUST SCALES ACCORDINGLY.

CITY OF WENATCHEE, WASHINGTON
WASTEWATER TREATMENT PLANT IMPROVEMENTS

ELECTRICAL
ELEMENTARY DIAGRAMS

DWG NO. 400-E-18
DATE NOV. 1990
PROJ. NO. SEA24579.N1

DATE: 11/8/90 CMB
DRAWN BY: J BROWN DESIGNED BY: TB JOYCE
DGN NAME: 0:/PROJ2/WENATCHE/WE400E-P.DGN

LUMINAIRE SCHEDULE

SYMBOL	TYPE	VOLTAGE	DESCRIPTION	MANUFACTURER	CATALOG NO.	LAMPS	MOUNTING
1	FLUOR.	120	2' x 4' STATIC TROFFER W/PRISMATIC ACRYLIC LENS.	DAY-BRITE	CG-242-CO2D-120	2-F40SP35/RS/WM	RECESSED
2	FLUOR.	120	7" x 4' FIXTURE W/ACRYLIC WRAPAROUND LENS.	KEENE WILLIAMS	SPEC.3 SERIES 21	2-F40SP35/RS/WM	SURFACE OR PENDANT
3	FLUOR.	120	NON-METALIC THERMOPLASTIC HOUSING W/ACRYLIC DIFFUSER AND NON-CORROSIVE POSITIVE TYPE LATCHES.	DAY-BRITE	VAPORLUME	2-F40SP35/RS/WM	PENDANT
4	FLUOR.	120	4' INDUSTRIAL W/WHITE DRY POLYESTER POWDER FINISH REFLECTOR, 10% UPLIGHT.	DAY-BRITE	4021IW-4	3-F40SP35/RS/WM	PENDANT
5	INC.	120	EMERGENCY BATTERY PACK UNIT W/TWO-25W PAR-36 SEALED BEAM LAMPS AND NICKEL-CADMIUM BATTERIES.	YORKLITE	ULTRAMATIC MODEL H	INCLUDED	WALL BRACKET
6	HPS	* 120/208	WEATHERPROOF DIE-CAST ALUMINUM HOUSING W/MOLDED SHOCKRESISTANT GLASS REFRACTOR.	HOLOPHANE	WALLPACK II	1-70W, CLEAR	WALL
7	HPS	120	POST TOP LUMINAIRE WITH INTEGRAL BALLAST AND IES TYPE 5 DISTRIBUTION PATTERN. PROVIDE 12' TAPERED ALUMINUM POLE CAT.NO. ARTA 123S4.0ASNX	G.E.	P17M10S1N1 AMS5GR	1-100W CLEAR	POLE
8	FLUOR.	120	VAPORTIGHT FLUORESCENT FIXTURE, SUITABLE FOR HAZARDOUS LOCATION CLASS 1,DIV.II,W/TEMPERED GLASS LENS.	CROUSE HINDS	FVN424.TG/120	2-F40SP35/RS/WM	PENDANT
9	FLUOR.	120	3' MIRROR LIGHT W/ACRYLIC PLASTIC EXTRUSION LENS.	HUBBEL	PM2111-03	2-F30SP35/RS/WM	WALL
10	FLUOR.	120	SHOWER LIGHT, WITH DROP OPAL LEXAN, SUITABLE FOR WET LOCATION.	PRESCOLITE	C8XTL 30	1-13W	RECESSED
11	HPS	120	DIE CAST ALUMINUM BALLAST HOUSING W/PRISMATIC BOROSILICATE GLASS REFRACTOR.	HOLOPHANE	ENDURALUME ENDR-15AHP12-A418	1-150W CLEAR	PENDANT
12	HPS	120	SIMILAR TO TYPE 17, EXCEPT W/150W TUNGSTEN HALOGEN AND INTERNAL RELAY.	HOLOPHANE	ENDR-15AHP12-A418 EM-F1	1-150W CLEAR	PENDANT
13	HPS	* 120/208	FORM TEN POLE MOUNT LUMINAIRE W/TYPE FM DISTRIBUTION PATTERN. PROVIDE 20' SQUARE POLE. W/INTEGRAL PHOTOCEL	GARDCO	H-14-1-FM-120 150HPS-NA CA5-20D1-NA	1-150W CLEAR	20' POLE
14	INC.	120	VAPORTIGHT ENCLOSED AND GASKETED LIGHT FIXTURE CLASS I, DIV.2	CROUSE-HINDS	VAPORGARD VXHB12GP	1-200W PS-25	WALL
15	HPS	120	CLASS 1, DIV 1, EXPLOSION PROOF MULTI-TAP HPF, BALLAST	ITT WEAVRER	HAZ LUX 5 SERIES	150W HPS	PENDANT
16	FLUOR.	120	SAME DESCRIPTION AS LUMINAIRE NO. 4	DAY-BRITE	4021IW-4	2-F40SP35/RS/WM	PENDANT
17	INC.	120	LOW BRIGHTNESS, 5" BLACK MILLIGROOED ALUMINUM OPEN BAFFLE DOWNLIGHT.	PRESCOLITE	1212-910	1-75W ER-30 FLOOD	RECESSED
18	HPS.	120	12" SQUARE RECESSED LUMINAIRE, ENCLOSED AND GASKETED, WEATHERPROOF WITH DROP WHITE GLASS DIFFUSER.	MC PHILBEN	48-8362P	1-70W, CLEAR	RECESSED

* DUAL VOLTAGE BALLAST

UNIT HEATER SCHEDULE

SYMBOL	KW	VOLTAGE/PHASE	MANUFACTURER	CAT. NO.	MTG	COMMENT
UH-5008	3.3	480/3	CHROMALOX	TYPE MUH	CEILING OR WALL	REMOTE T-STAT, INTEGRAL 120V CPT AND CONTACTOR.

CARL V. BRACKETT, STATE OF WASHINGTON, REGISTERED PROFESSIONAL ENGINEER

CH2M HILL

DSGN TB JOYCE
DR J BROWN
CHK C BRACKETT
APVD K HOOD

NO.	DATE	REVISION	BY	APVD

REUSE OF DOCUMENTS
THIS DOCUMENT, AND THE IDEAS AND DESIGNS INCORPORATED HEREIN, AS AN INSTRUMENT OF PROFESSIONAL SERVICE, IS THE PROPERTY OF CH2M HILL AND IS NOT TO BE USED, IN WHOLE OR IN PART, FOR ANY OTHER PROJECT WITHOUT THE WRITTEN AUTHORIZATION OF CH2M HILL.
©CH2M HILL

BAR IS ONE INCH ON ORIGINAL DRAWING. 0 1"
IF NOT ONE INCH ON THIS SHEET, ADJUST SCALES ACCORDINGLY.

CITY OF WENATCHEE, WASHINGTON
WASTEWATER TREATMENT PLANT IMPROVEMENTS

ELECTRICAL
LUMINAIRE SCHEDULE

DWG NO. 400-E-19
DATE NOV. 1990
PROJ. NO. SEA24579.N1

DATE: 11-8-90
DRAWN BY: CM BLACKWELL DESIGNED BY: TB JOYCE
DGN NAME: O:/PROJ2/WENATCHE/WE400E-X.DGN

PANEL SCHEDULE

NO. L3E | LOCATION: HEADWRKS MCC 3E | SERVING: HEADWORKS | 120/208 VOLTS 3 Ø 4 WIRE | 125 AMP MAIN CB

CIRCUIT DESCRIPTION	KVA	AMP			AMP	KVA	CIRCUIT DESCRIPTION
MCC RM LTG.		20/1	1	2	20/1		SCREENINGS AREA LTG.
GRIT LOADING LTG.		20/1	3	4	20/1		BLOWER RM LTG.
PUMP RM LTG.		20/1	5	6	20/1		BLDG. EXTERIOR LTG.
MCC RM RCPT		20/1	7	8	20/1		YARD LTG
BLOWER RM RCPT		20/1	9	10	20/1		PUMP RM RCPT
EF-5001		20/1	11	12	20/1		ECP-5001
EF-5002		20/1	13	14	20/1		UPS-3
HCGS PNL		50/3	15	16	70/3		PNL 'LA' FDR@ADMIN BLDG
			17	18			
			19	20			
PNL 'L4E' FDR. @ SOLIDS		40/3	21	22	20/1		SPARE
			23	24	20/1		LDIT-5011
			25	26	20/1		LDIT-5061
WH-2		20/3	27	28	20/1		SPARE
			29	30	20/1		SPARE
			31	32	20/1		SPARE
SPACE			33	34			SPACE
			35	36			
			37	38			
			39	40			
			41	42			

NEUTRAL

PANEL SCHEDULE

NO. LA | LOCATION: ADMIN BLDG | TOTAL KVA: ADMIN BLDG | 120/208 VOLTS 3 Ø 4 WIRE | 70 AMP MAIN CB

CIRCUIT DESCRIPTION	KVA	AMP			AMP	KVA	CIRCUIT DESCRIPTION
MEETING RM LTG		20/1	1	2	20/1		OPERATOR OFFICE LTG
CORRIDOR/LOCKER/REST LTG		20/1	3	4	20/1		OPERATOR OFFICE RCPT
MEETING RM RCPT		20/1	5	6	20/1		LOCKER/REST RCPT
SPARE		20/1	7	8	20/1		SF-1001
EXST EF-8		20/1	9	10	20/1		UPS-1
EF-1001		20/1	11	12	20/1		REFRIG. RCPT
MICROWAVE RCPT		20/1	13	14	20/1		M-5041
SPARE		20/1	15	16	20/1		ECP-1001
HU-1001		30/2	17	18	30/2		HU-1002
			19	20			
WATER COOLER RCPT		20/1	21	22	20/1		SHOWER LTG
SPARE		20/1	23	24	20/1		SPARE
SOFIT LTG		20/1	25	26	20/1		SPARE
STOVE TOP		40/2	27	28			SPACE
			29	30			
SPACE			31	32			
			33	34			
			35	36			
			37	38			
			39	40			
			41	42			

NEUTRAL

PANEL SCHEDULE

NO. P4A | LOCATION: SOLIDS HANDING BLDG | TOTAL KVA: ADMIN BLDG | 480 VOLTS 3 Ø 3 WIRE | 50 AMP MAIN CB

CIRCUIT DESCRIPTION	KVA	AMP			AMP	KVA	CIRCUIT DESCRIPTION
ROLL UP DOOR NO. 1		20/3	1	2	20/3		ROLL UP DOOR NO. 2
			3	4			
			5	6			
BELT FILTER PRESS CP		20/3	7	8	20/3		BOILER, BO-8331
			9	10			
			11	12			
MONORAIL M-8950		20/3	13	14	20/3		GRVTY BELT THICK. CP M-8080
			15	16			
			17	18			
SOLDS HNDLG W1 PUMP CP		20/3	19	20	20/3		SUMP PUMP CP
			21	22			
			23	24			
ROLL UP DOOR NO. 3		20/3	25	26	20/3		UH-8002
			27	28			
			29	30			
UH-8001		20/3	31	32	20/3		SPARE
			33	34			
			35	36			
SPARE		20/3	37	38	20/3		SPARE
			39	40			
			41	42			

NEUTRAL

PANEL SCHEDULE

NO. L4E | LOCATION: SLDS HNDLG MCC RM | SERVING: SLDS HNDLG FACILITY | 120/208 VOLTS 3 Ø 4 WIRE | 40 AMP MAIN CB

CIRCUIT DESCRIPTION	KVA	AMP			AMP	KVA	CIRCUIT DESCRIPTION
UPS-2		20/1	1	2	20/1		STAIRWELL LTG
STAIRWELL		20/1	3	4	20/1		MCC RM LTG
SPARE		20/1	5	6	20/1		SPARE
SPARE		20/1	7	8			SPACE
SPACE			9	10			
SPACE			11	12			

NEUTRAL

PANEL SCHEDULE

NO. L4 | LOCATION: SLDS HNDLG MCC RM | SERVING: SLDS HNDLG FACILITY | 120/208 VOLTS 3 Ø 4 WIRE | 125 AMP MAIN CB

CIRCUIT DESCRIPTION	KVA	AMP			AMP	KVA	CIRCUIT DESCRIPTION
SLUDGE PUMP RM LTG		20/1	1	2	20/1		SLUDGE PUMP RM LTG
GAS COMPRESSOR RM LTG		20/1	3	4	20/1		BOILER RM LTG
TRUCK LOADING LTG		20/1	5	6	20/1		POLYMER LTG
BOILER ROOM RCPT		20/1	7	8	20/1		UPPER LEVEL LTG
UPPER LEVEL LTG		20/1	9	10	20/1		UPPER LEVEL LTG
BLDG EXTERIOR LTG		20/1	11	12	20/1		LOWER LEVEL RCPT
TRUCK LOAD RCPT		20/1	13	14	20/1		POLYMER RM RCPT
UPPER LEVEL RCPT		20/1	15	16	20/1		UPPER LEVEL RCPT
EF-8001		20/1	17	18	20/1		EF-8003
EF-8004		20/1	19	20	20/1		ECP-8001
HWP-8003		20/1	21	22	20/3		WH-3
PNL L4A FDR		30/3	23	24			
			25	26			
			27	28	20/3		WH-4
WH-5		20/3	29	30			
			31	32			
			33	34	20/1		HEAT TRACE
YARD LTG		20/1	35	36	20/1		SPARE
GAS COMP. RM RCPT		20/1	37	38			SPACE
UH-8005		20/1	39	40			
SPARE		20/1	41	42			

NEUTRAL

PANEL SCHEDULE

NO. LAUPS | LOCATION: ADMIN BLDG | SERVING: SLDS HNDLG FACILITY | 120 VOLTS 1 Ø | 20 AMP MAIN CB

CIRCUIT DESCRIPTION	KVA	AMP			AMP	KVA	CIRCUIT DESCRIPTION
EXST POP		20/1	1	2	20/1		COMPUTER
SPARE		20/1	3	4	20/1		SPARE
SPARE		20/1	5	6	20/1		SPARE
SPARE		20/1	7	8	20/1		SPARE

NEUTRAL

PANEL SCHEDULE

NO. L3EA | LOCATION: HEADWRKS MCC 3E | SERVING: HEADWORKS | 120/208 VOLTS 3 Ø 4 WIRE | 50 AMP MAIN CB

CIRCUIT DESCRIPTION	KVA	AMP			AMP	KVA	CIRCUIT DESCRIPTION
SPARE		20/1	1	2	20/1		SPARE
SPARE		20/1	3	4	20/1		SPARE
SPARE		20/1	5	6			SPACE
LP-5051		20/1	7	8	20/1		SCREENINGS AREA RCPT
LP-5071		20/1	9	10	20/1		LP-5052
UH-5001		20/1	11	12	20/1		LP-5072
UH-5002		20/1	13	14	20/1		UH-5003
UH-5004		20/1	15	16	20/1		UH-5005
UH-5006		20/1	17	18	20/1		UH-5007
HEAT TRACE		20/1	19	20	20/1		HEAT TRACE

NEUTRAL

PANEL SCHEDULE

NO. L4A | LOCATION: SLDS HNDLG MCC RM | SERVING: SLDS HNDLG FACILITY | 120/208 VOLTS 3 Ø | 30 AMP MAIN CB

CIRCUIT DESCRIPTION	KVA	AMP			AMP	KVA	CIRCUIT DESCRIPTION
FIT-8832		20/1	1	2	20/1		FIT-8831
TET-8850		20/1	3	4	20/1		TCV-8840
FSL-8110		20/1	5	6	20/1		TCV-8850
TCV-8890		20/1	7	8	20/1		M-8510
TCV-8880		20/1	9	10	20/1		FV-8640
FV-8234		20/1	11	12	20/1		FV-8233
FSL-8223		20/1	13	14	20/1		FV-8232
FV-8231		20/1	15	16	20/1		FSL-8221
FSL-8222		20/1	17	18	20/1		FSL-8050
FIT-8130		20/1	19	20	20/1		FV-8630
FIT-8620		20/1	21	22	20/1		FCV-8620
LSL-8101		20/1	23	24	20/1		FS-8062
FIT-8660		20/1	25	26	20/1		SPARE
SPACE			27	28			SPACE
			29	30			
			31	32			
			33	34			
			35	36			
			37	38			
			39	40			
			41	42			

NEUTRAL

PANEL SCHEDULE

NO. L4EUPS | LOCATION: SLDS HNDLG MCC RM | SERVING: SLDS HNDLG FACILITY | 120 VOLTS 1 Ø | 20 AMP MAIN CB

CIRCUIT DESCRIPTION	KVA	AMP			AMP	KVA	CIRCUIT DESCRIPTION
SCP		20/1	1	2	20/1		LP-8090
LP-8080		20/1	3	4	20/1		SPARE
SPARE		20/1	5	6	20/1		SPARE
SPARE		20/1	7	8	20/1		SPARE

NEUTRAL

PANEL SCHEDULE

NO. L3EUPS | LOCATION: HEADWKS MCC RM | SERVING: SLDS HNDLG FACILITY | 120 VOLTS 1 Ø | 20 AMP MAIN CB

CIRCUIT DESCRIPTION	KVA	AMP			AMP	KVA	CIRCUIT DESCRIPTION
HCP		20/1	1	2	20/1		SPARE
SPARE		20/1	3	4	20/1		SPARE
SPACE			5	6			SPACE
SPACE			7	8			SPACE

NEUTRAL

CARL V. BRACKETT REGISTERED PROFESSIONAL ENGINEER

CH2M HILL

DSGN	TB JOYCE
DR	CM BLACKWELL
CHK	C. BRACKETT
APVD	K HOOD

NO.	DATE	REVISION	BY	APVD

REUSE OF DOCUMENTS
THIS DOCUMENT, AND THE IDEAS AND DESIGNS INCORPORATED HEREIN, AS AN INSTRUMENT OF PROFESSIONAL SERVICE, IS THE PROPERTY OF CH2M HILL AND IS NOT TO BE USED, IN WHOLE OR IN PART, FOR ANY OTHER PROJECT WITHOUT THE WRITTEN AUTHORIZATION OF CH2M HILL.
©CH2M HILL

BAR IS ONE INCH ON ORIGINAL DRAWING.
0 1"
IF NOT ONE INCH ON THIS SHEET, ADJUST SCALES ACCORDINGLY.

CITY OF WENATCHEE, WASHINGTON
WASTEWATER TREATMENT PLANT IMPROVEMENTS

ELECTRICAL
PANEL SCHEDULE

DWG NO. 400-E-20
DATE NOV. 1990
PROJ NO. SEA24579.N1

DATE: 11/08/90 CJB
DRAWN BY: CM BLACKWELL DESIGNED BY: TB JOYCE
DGN NAME: 0:/PROJ2/WENATCHE/WE400E-T.DGN

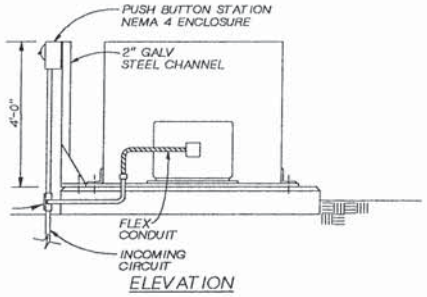

MOTOR CONNECTION DETAIL (1)

NTS

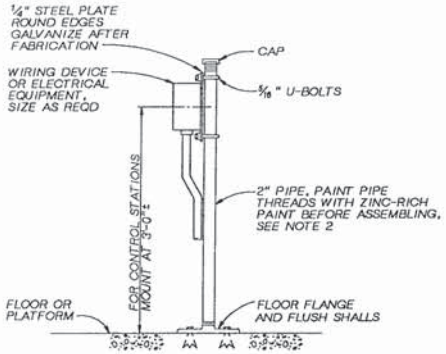

NOTES:
1. ALL MOUNTING HARDWARE TO BE GALVANIZED. USE WASHERS AND SPLIT LOCK-WASHERS UNDER ALL NUTS.

PEDESTAL MOUNTED DEVICE (4)

NTS

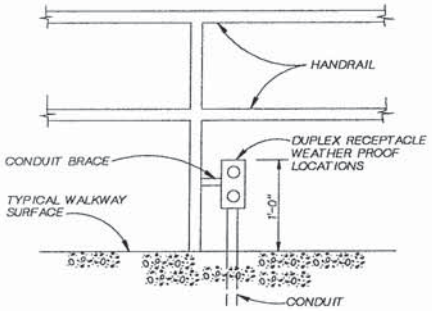

TYPICAL RECEPTACLE MOUNTING @ HANDRAIL DETAIL (6)

NTS

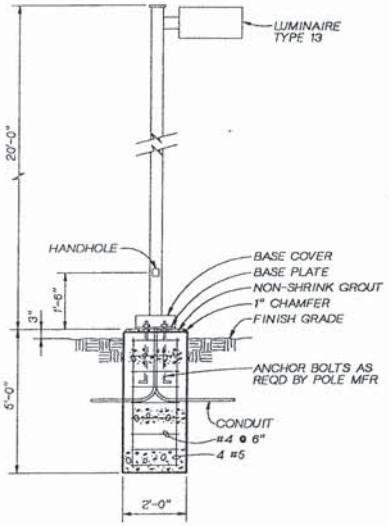

STREET LUMINAIRE POLE DETAIL (8)

NTS

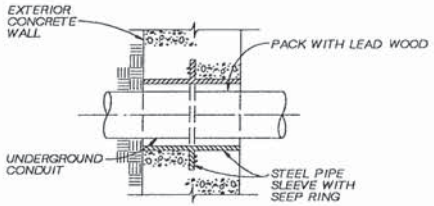

CONDUIT UNDERGROUND ENTRANCE DETAIL (2)

NTS

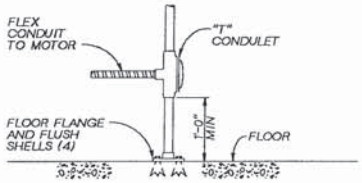

TYPICAL DETAIL FOR CONDUIT TO MOTOR FROM CEILING (3)

NTS

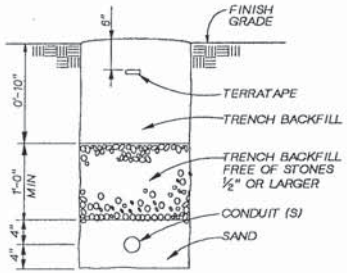

TYPICAL TRENCHING FOR UNDERGROUND CONDUITS (5)

NTS

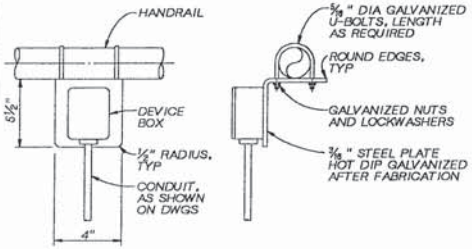

TYPICAL DEVICE MOUNTING AT HANDRAIL (7)

NTS

DSGN TB JOYCE						
DR CM BLACKWELL						
CHK C BRACKETT						
APVD K HOOD	NO.	DATE	REVISION	BY	APVD	

REUSE OF DOCUMENTS
THIS DOCUMENT, AND THE IDEAS AND DESIGNS INCORPORATED HEREIN, AS AN INSTRUMENT OF PROFESSIONAL SERVICE, IS THE PROPERTY OF CH2M HILL AND IS NOT TO BE USED, IN WHOLE OR IN PART, FOR ANY OTHER PROJECT WITHOUT THE WRITTEN AUTHORIZATION OF CH2M HILL.
©CH2M HILL

BAR IS ONE INCH ON ORIGINAL DRAWING.
0 1"
IF NOT ONE INCH ON THIS SHEET, ADJUST SCALES ACCORDINGLY.

CITY OF WENATCHEE, WASHINGTON
WASTEWATER TREATMENT PLANT IMPROVEMENTS

ELECTRICAL
ELECTRICAL DETAILS

DWG NO. 400-E-21
DATE NOV. 1990
PROJ NO. SEA24579.N1

DATE: 11/08/90 CJB
DRAWN BY: CM BLACKWELL DESIGNED BY: TB JOYCE
DGN NAME: O:/PROJ2/WENATCHE/ WE400E-U.DGN

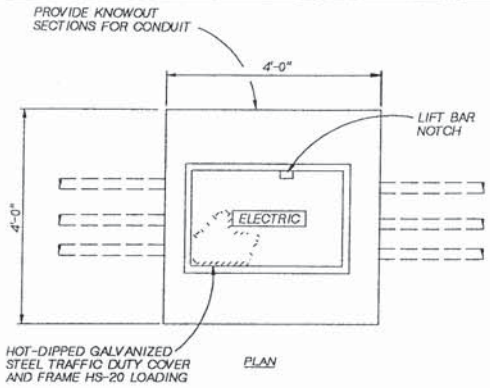

PLAN

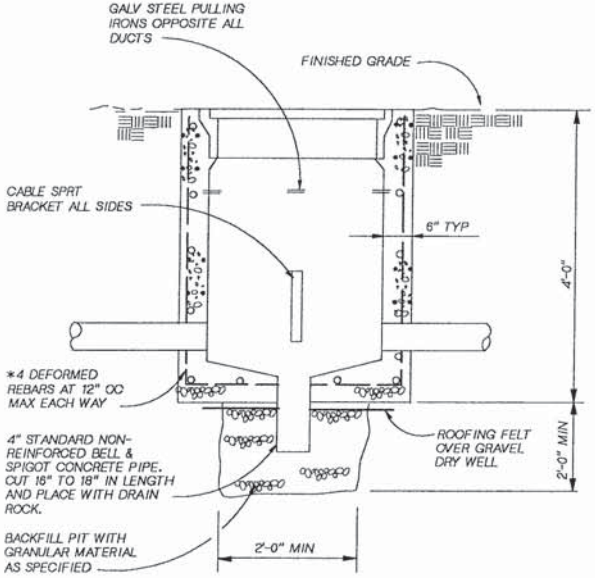

SECTION

ELECTRICAL HANDHOLE

DETAIL (1)

NTS

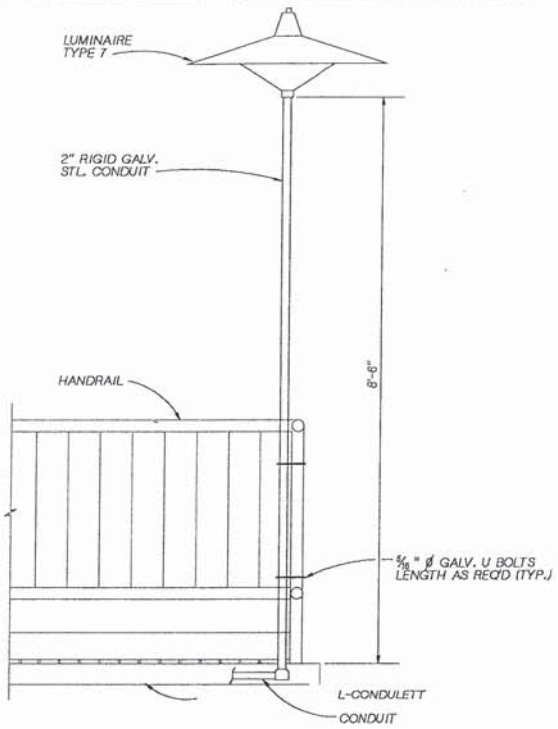

TYPICAL PEDESTAL MOUNTED LUMINAIRE

DETAIL (2)

NTS

DSGN T.B. JOYCE						
DR CM BLACKWELL						
CHK C BRACKETT						
APVD K HOOD	NO.	DATE	REVISION	BY	APVD	

REUSE OF DOCUMENTS
THIS DOCUMENT, AND THE IDEAS AND DESIGNS INCORPORATED HEREIN, AS AN INSTRUMENT OF PROFESSIONAL SERVICE, IS THE PROPERTY OF CH2M HILL AND IS NOT TO BE USED, IN WHOLE OR IN PART, FOR ANY OTHER PROJECT WITHOUT THE WRITTEN AUTHORIZATION OF CH2M HILL.
©CH2M HILL

BAR IS ONE INCH ON ORIGINAL DRAWING.
0 1"
IF NOT ONE INCH ON THIS SHEET, ADJUST SCALES ACCORDINGLY.

CITY OF WENATCHEE, WASHINGTON
WASTEWATER TREATMENT PLANT IMPROVEMENTS

ELECTRICAL
STANDARD DETAILS

DWG NO. 400-E-22
DATE NOV. 1990
PROJ NO. SEA24579.N1

DRAWN BY: DL CHRISINGER DESIGNED BY: R GRAVETTE
DGN NAME: O:/PROJ2/WENATCHE/WE8008-A.DGN

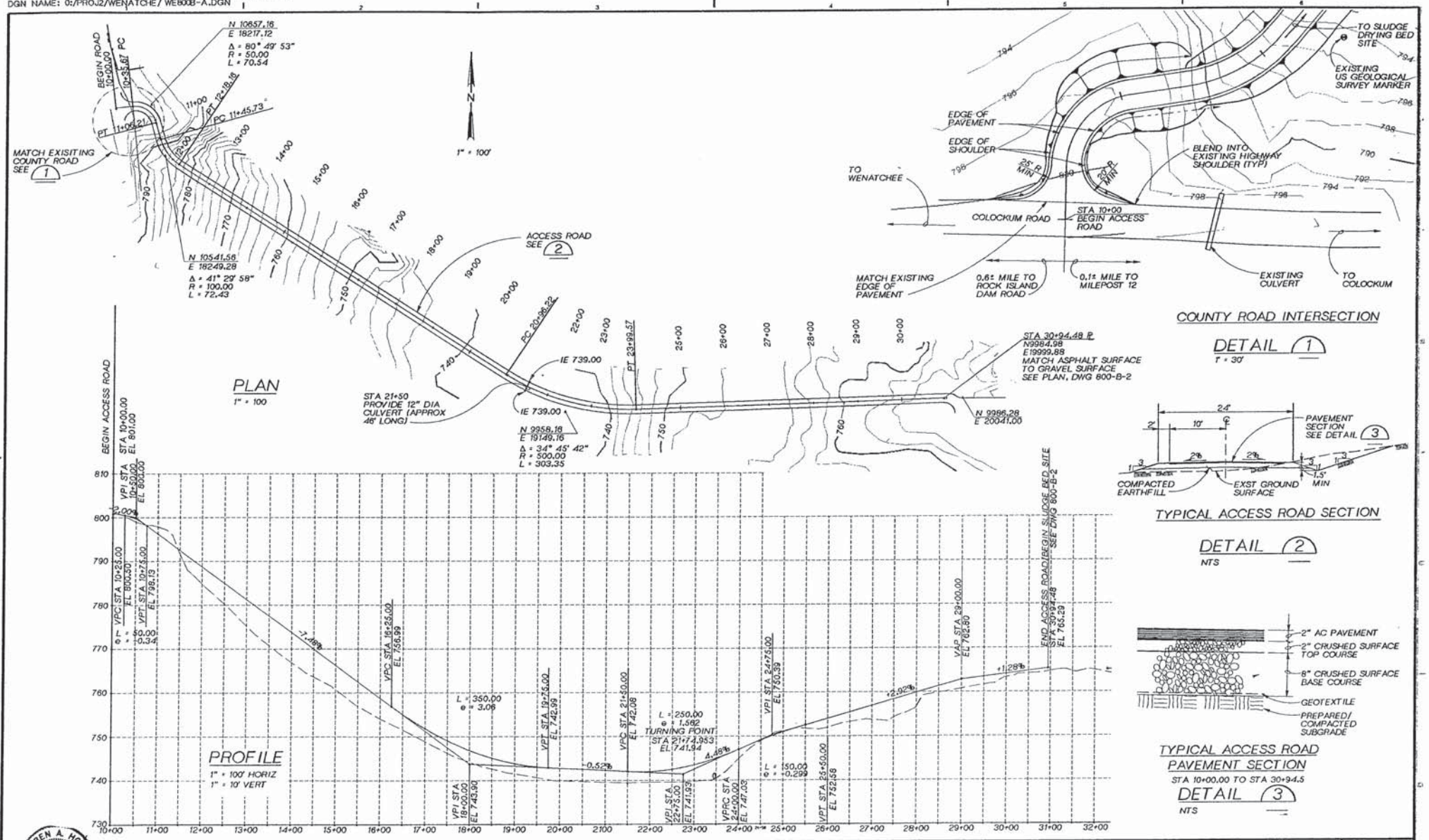

KAREN A. HOOD
STATE OF WASHINGTON
REGISTERED
PROFESSIONAL ENGINEER

CH2M HILL

DSGN	T THOMAS
DR	J BROWN
CHK	J DORAN
APVD	K HOOD

NO.	DATE	REVISION	BY	APVD

REUSE OF DOCUMENTS
THIS DOCUMENT, AND THE IDEAS AND DESIGNS INCORPORATED HEREIN, AS AN INSTRUMENT OF PROFESSIONAL SERVICE, IS THE PROPERTY OF CH2M HILL AND IS NOT TO BE USED, IN WHOLE OR IN PART, FOR ANY OTHER PROJECT WITHOUT THE WRITTEN AUTHORIZATION OF CH2M HILL.
©CH2M HILL

SCALE'S BAR
BAR IS ONE INCH ON ORIGINAL DRAWING.
0 1"
IF NOT ONE INCH ON THIS SHEET, ADJUST SCALES ACCORDINGLY.

CITY OF WENATCHEE, WASHINGTON
WASTEWATER TREATMENT PLANT IMPROVEMENTS

SLUDGE DRYING BEDS
ACCESS ROAD
PLAN AND PROFILE

DWG NO. 800-B-1
DATE NOV. 1990
PROJ NO. SEA24579.N1

DRAWN BY: DL CHRISINGER DESIGNED BY: TN THOMAS
DGN NAME: O:/PROJ2/WENATCHE/WE800B-C.DGN

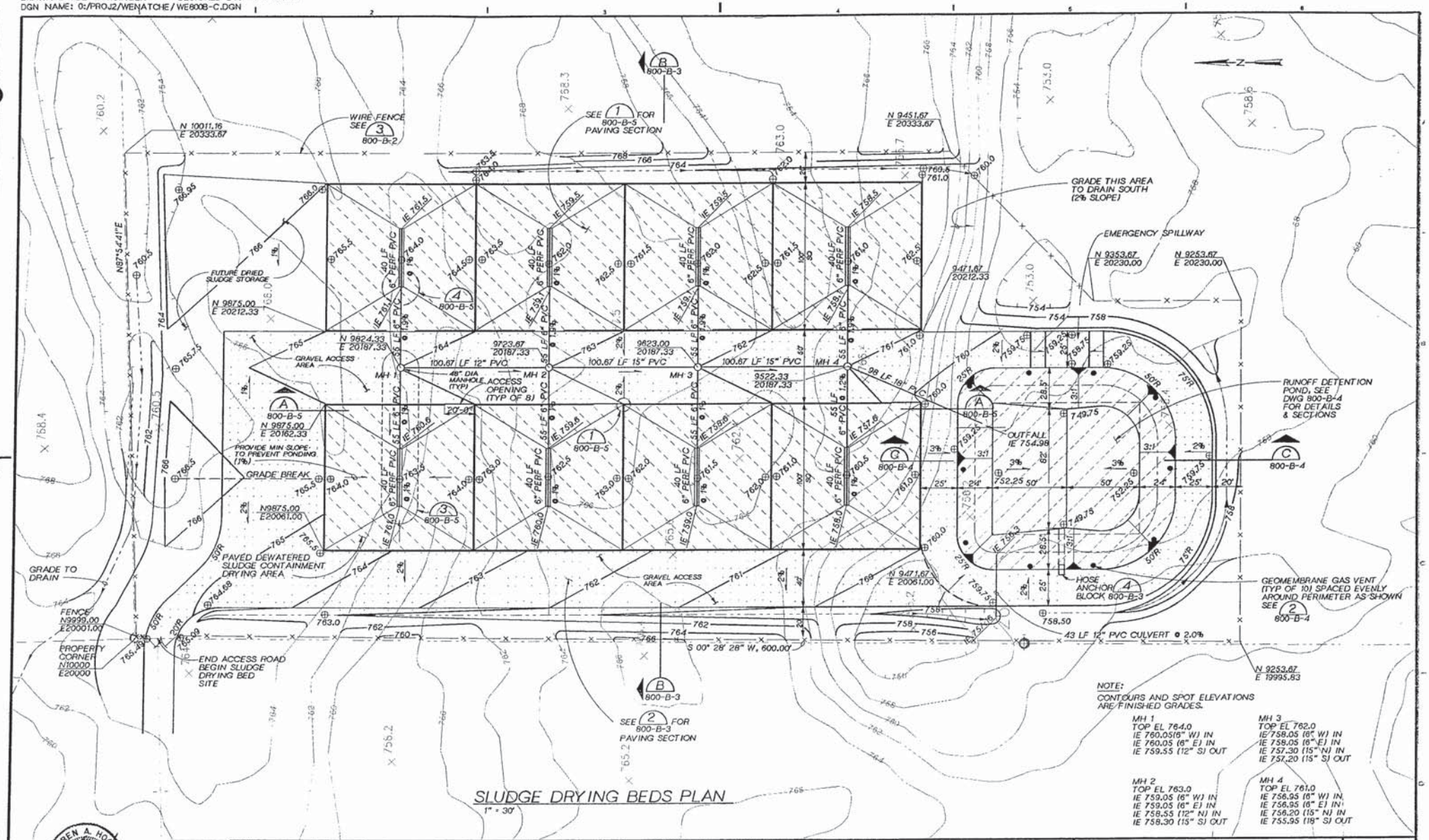

SLUDGE DRYING BEDS PLAN
1" = 30'

KAREN A. HOOD REGISTERED PROFESSIONAL ENGINEER

CH2M HILL

DSGN	TN THOMAS
DRN	DL CHRISINGER
CHK	J DORAN
APVD	K HOOD

NO.	DATE	REVISION	BY	APVD

REUSE OF DOCUMENTS
THIS DOCUMENT, AND THE IDEAS AND DESIGNS INCORPORATED HEREIN, AS AN INSTRUMENT OF PROFESSIONAL SERVICE, IS THE PROPERTY OF CH2M HILL AND IS NOT TO BE USED, IN WHOLE OR IN PART, FOR ANY OTHER PROJECT WITHOUT THE WRITTEN AUTHORIZATION OF CH2M HILL.
©CH2M HILL

VERIFY SCALE
BAR IS ONE INCH ON ORIGINAL DRAWING.
0 1"
IF NOT ONE INCH ON THIS SHEET, ADJUST SCALES ACCORDINGLY.

CITY OF WENATCHEE, WASHINGTON
WASTEWATER TREATMENT PLANT IMPROVEMENTS

SLUDGE DRYING BEDS
SITE AND GRADING PLAN

DWG NO. 800-B-2
DATE NOV. 1990
PROJ. NO. SEA24579.N1

DATE: 11-6-90 DLC
DRAWN BY: CM BLACKWELL DESIGNED BY: TN THOMAS
DGN NAME: O:/PROJ2/WENATCHE/WE8008-D.DGN

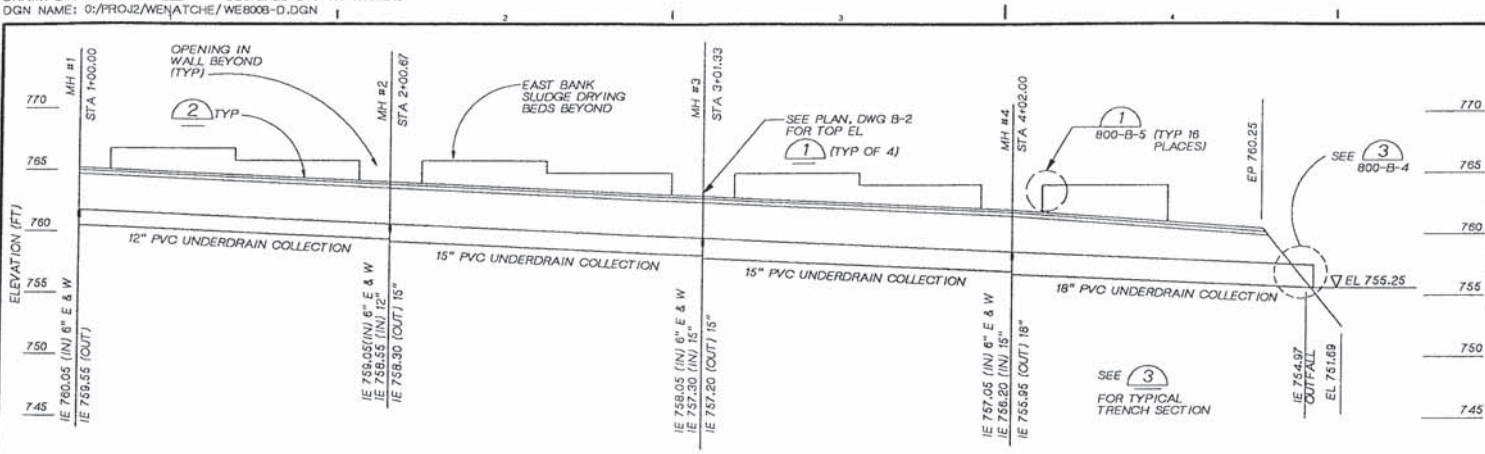

UNDERDRAIN COLLECTION PROFILE

H 1"=20'
V 1"=5'

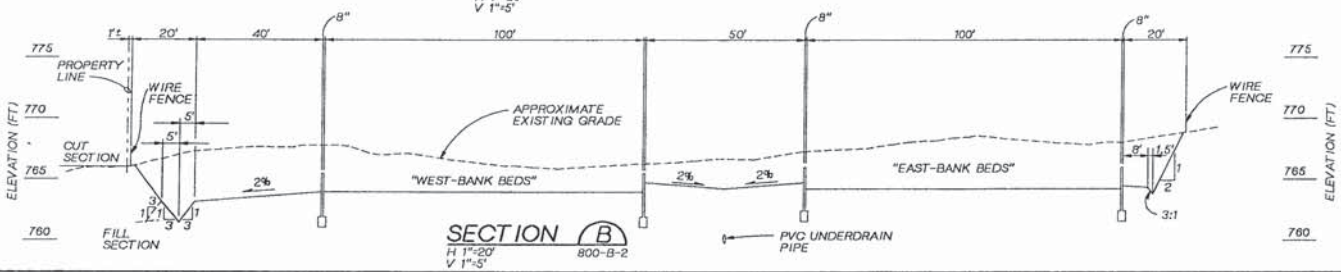

SECTION B

H 1"=20'
V 1"=5'
800-B-2

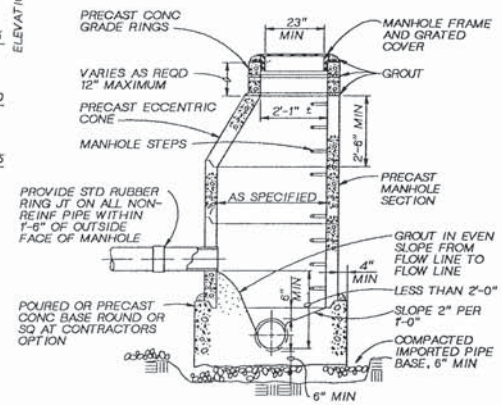

TYPICAL MANHOLE 1

NTS

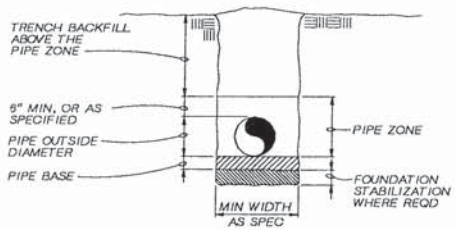

TYPICAL TRENCH 3

NTS

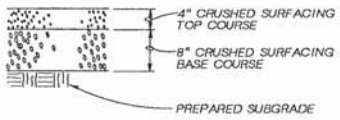

GRAVEL ACCESS AREA SURFACING

DETAIL 2

1"=1'-0"
800-B-2
800-B-3

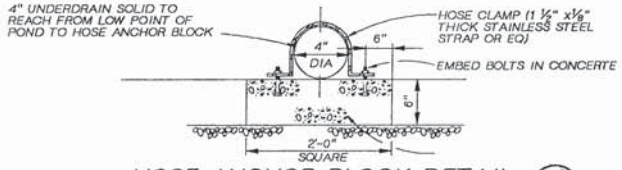

HOSE ANCHOR BLOCK DETAIL 4

NTS
B-2

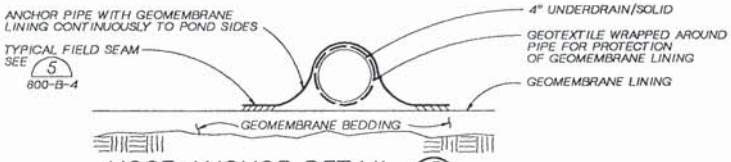

HOSE ANCHOR DETAIL 5

NTS
800-B-2

KAREN A. HOOD — STATE OF WASHINGTON — 26396 — PROFESSIONAL ENGINEER

CH2M HILL

DSGN	TN THOMAS
DR	CM BLACKWELL
CHK	R STAEHLIN
APVD	K HOOD

NO.	DATE	REVISION	BY	APVD

REUSE OF DOCUMENTS
THIS DOCUMENT, AND THE IDEAS AND DESIGNS INCORPORATED HEREIN, AS AN INSTRUMENT OF PROFESSIONAL SERVICE, IS THE PROPERTY OF CH2M HILL AND IS NOT TO BE USED, IN WHOLE OR IN PART, FOR ANY OTHER PROJECT WITHOUT THE WRITTEN AUTHORIZATION OF CH2M HILL.
©CH2M HILL

BAR IS ONE INCH ON ORIGINAL DRAWING.
0 1"
IF NOT ONE INCH ON THIS SHEET, ADJUST SCALES ACCORDINGLY.

CITY OF WENATCHEE, WASHINGTON
WASTEWATER TREATMENT PLANT IMPROVEMENTS

SLUDGE DRYING BEDS
SITE AND DRAINAGE DETAILS

DWG NO. 800-B-3
DATE NOV XX 1990
PROJ NO. SEA24579.N1

DATE: 11-7-90 DLC
DRAWN BY: J.BROWN DESIGNED BY: BL WOODWARD
DGN NAME: C:/PROJ2/WENATCHE/WE8008-E.DGN

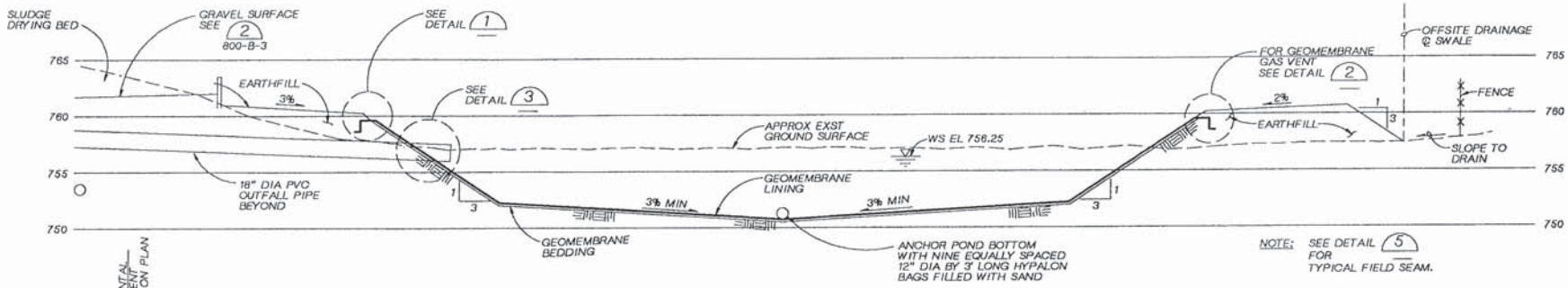

NOTE: SEE DETAIL 5 FOR TYPICAL FIELD SEAM.

SECTION C
800-B-2
HORIZ 1"=10'
VERT 1"=5'

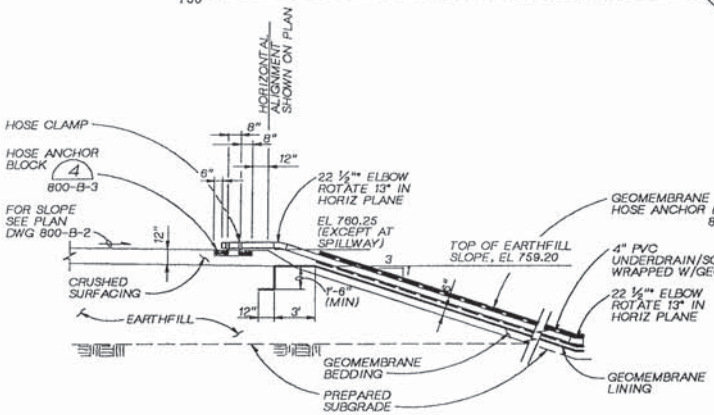

GEOMEMBRANE AND HOSE ANCHOR DETAIL 1
NTS

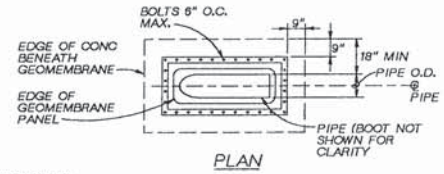

PLAN

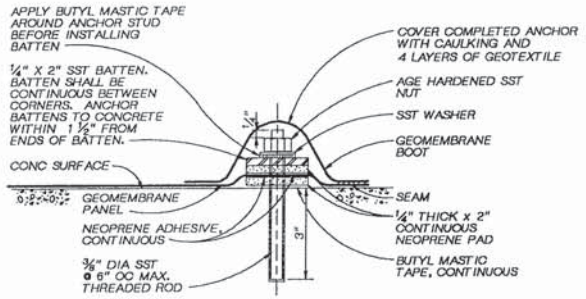

NOTE:
LIMIT COMPRESSION OF NEOPRENE PADS TO 10 - 15 PRECENT TOTAL PAD THICKNESS.

GEOMEMBRANE ATTACHMENT TO CONCRETE DETAIL 4
NTS

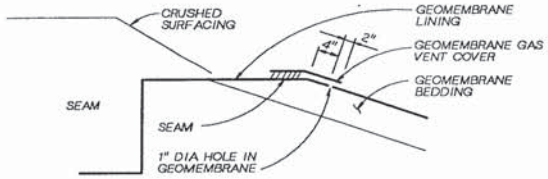

SECTION

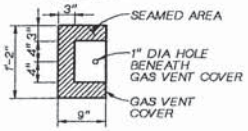

PLAN

GEOMEMBRANE GAS VENT DETAIL 2
NTS
800-B-2
800-B-4

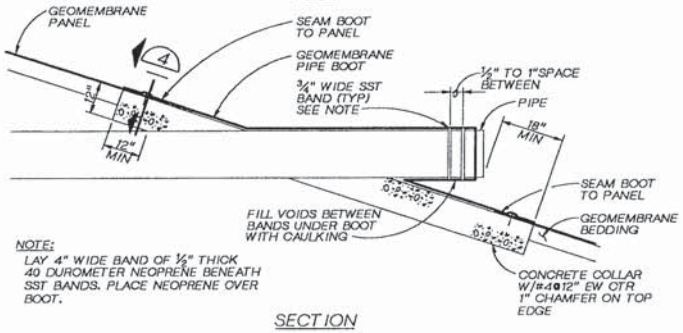

NOTE:
LAY 4" WIDE BAND OF ½" THICK 40 DUROMETER NEOPRENE BENEATH SST BANDS. PLACE NEOPRENE OVER BOOT.

SECTION

PIPE PENETRATION THROUGH SIDESLOPE DETAIL 3
NTS

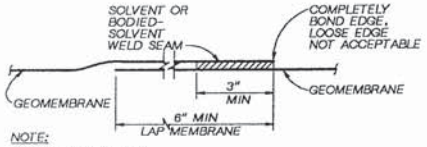

NOTE:
ALL WELDS SHALL BE CONTINUOUS AND WATERTIGHT

GEOMEMBRANE FIELD SEAM DETAIL 5
NTS
800-B-4
800-B-3

KAREN A. HOOD, PROFESSIONAL ENGINEER

CH2M HILL

DSGN	BL WOODWARD				
DR	J BROWN				
CHK	L WELL				
APVD	K HOOD	NO.	DATE	REVISION	BY / APVD

REUSE OF DOCUMENTS
THIS DOCUMENT, AND THE IDEAS AND DESIGNS INCORPORATED HEREIN, AS AN INSTRUMENT OF PROFESSIONAL SERVICE, IS THE PROPERTY OF CH2M HILL AND IS NOT TO BE USED, IN WHOLE OR IN PART, FOR ANY OTHER PROJECT WITHOUT THE WRITTEN AUTHORIZATION OF CH2M HILL.
©CH2M HILL

BAR IS ONE INCH ON ORIGINAL DRAWING. 0 — 1" IF NOT ONE INCH ON THIS SHEET, ADJUST SCALES ACCORDINGLY.

CITY OF WENATCHEE, WASHINGTON
WASTEWATER TREATMENT PLANT IMPROVEMENTS

SLUDGE DRYING BEDS
POND SECTION & DETAILS

DWG NO. 800-B-4
DATE NOV. 1990
PROJ NO. SEA24579.N1

DATE: 11-6-90 DLC
DRAWN BY: J. BROWN DESIGNED BY: M. HOYRUP
DGN NAME: G:/PROJ2/WENATCHE/WE800B-F.DGN

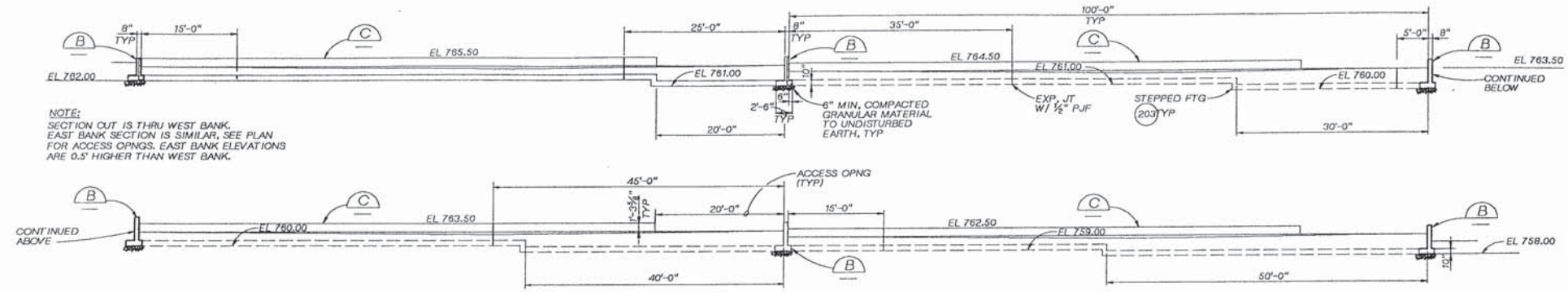

SECTION A
⅛"=1'-0" 800-B-2

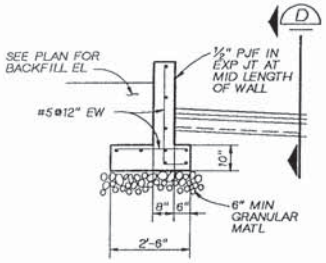

SECTION B
½"=1'-0"

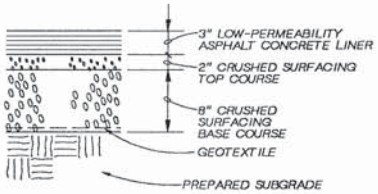

TYPICAL DRYING BEDS PAVEMENT SECTION

DETAIL 1
1½"=1'-0" 800-M-2 800-M-5

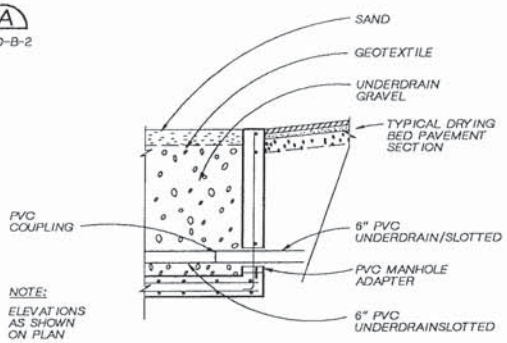

UNDERDRAIN CONNECTION

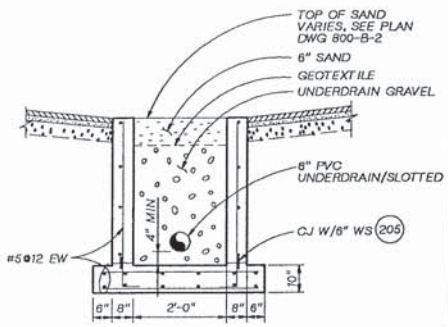

TYPICAL UNDERDRAIN SECTION

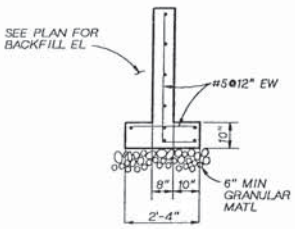

SECTION C
½"=1'-0"

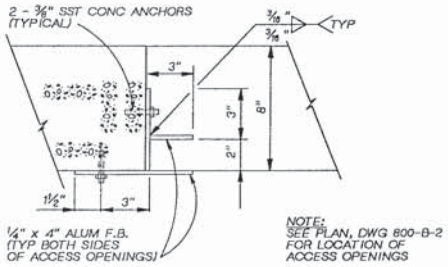

GATE HOLDER PLAN

DETAIL 2
3"=1'-0" 800-M-2 800-M-3

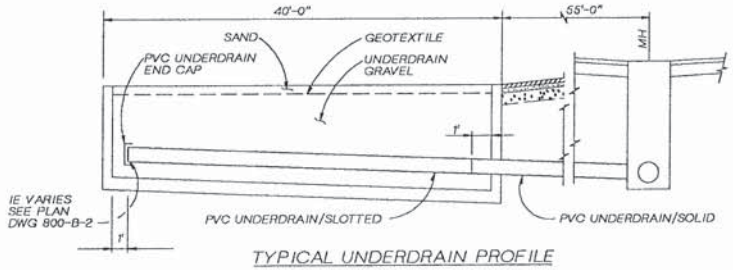

TYPICAL UNDERDRAIN PROFILE

DETAIL 3
NTS 800-B-2 800-B-5

DSGN	M.HOYRUP					
DR	J.BROWN					
CHK	J DORAN					
APVD	K HOOD	NO.	DATE	REVISION	BY	APVD

CH2M HILL

REUSE OF DOCUMENTS
THIS DOCUMENT, AND THE IDEAS AND DESIGNS INCORPORATED HEREIN, AS AN INSTRUMENT OF PROFESSIONAL SERVICE, IS THE PROPERTY OF CH2M HILL AND IS NOT TO BE USED, IN WHOLE OR IN PART, FOR ANY OTHER PROJECT WITHOUT THE WRITTEN AUTHORIZATION OF CH2M HILL.
©CH2M HILL

BAR IS ONE INCH ON ORIGINAL DRAWING. 0 1"
IF NOT ONE INCH ON THIS SHEET, ADJUST SCALES ACCORDINGLY.

CITY OF WENATCHEE, WASHINGTON
WASTEWATER TREATMENT PLANT IMPROVEMENTS

SLUDGE DRYING BEDS
STRUCTURAL SECTIONS AND DETAILS

DWG NO. 800-B-5
DATE NOV. 1990
PROJ NO. SEA24579.N1